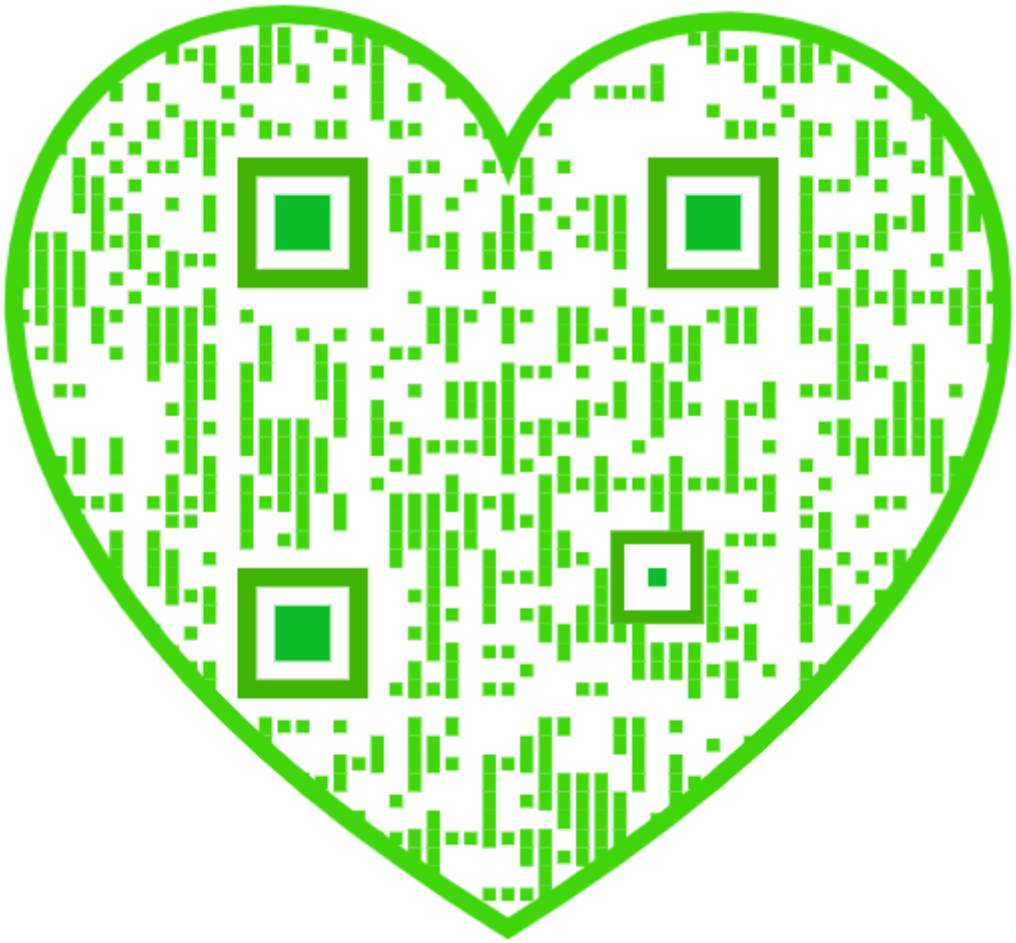

ORE DRESSING.

Digitized by Google

Published by the

McGraw-Hill Book Company

New York

Successors to the Book Departments of the

McGraw Publishing Company | Hill Publishing Company

Publishers of Books for

Electrical World
The Engineering Record
Electric Railway Journal
The Engineering and Mining Journal
Power and The Engineer
American Machinist

Ore Dressing

By

ROBERT H. RICHARDS, S.B., LL.D.

Professor of Mining Engineering and Metallurgy at the Massachusetts Institute of Technology, Boston, Mass., U. S. A.

IN FOUR VOLUMES

VOL. IV

FIRST EDITION

SECOND IMPRESSION

1909

McGRAW-HILL BOOK COMPANY

239 WEST 39TH STREET, NEW YORK

6 BOUVERIE STREET, LONDON, E.C.

Digitized by Google

THE NEW YORK
PUBLIC LIBRARY
552662
ASTOR, LENOX AND
TILDEN FOUNDATIONS.
R 1912 L

COPYRIGHT, 1909
BY THE
MCGRAW-HILL BOOK COMPANY

The Plimpton Press Norwood Mass. U.S.A.

PREFACE FOR VOLUMES III. AND IV.

ORE DRESSING appeared as a two-volume book in 1903. Since that time advances in the art of concentrating ores have been exceedingly rapid and in some instances well-nigh revolutionary. Investigations have been made for the purpose of explaining the principles of ore separation, new concentrating devices have been invented and installed in the mills, and the mills themselves have been greatly improved. For these reasons the time seems to have come to bring the subject up to date. When this present work was started in October, 1906, it was thought that something in the nature of a small supplement or appendix would suffice and on this basis the collection of material was undertaken. It soon became apparent that the new work would rank in size with Volumes I and II and hence naturally receive the titles of Volumes III and IV. The idea of revising and rewriting Volumes I and II seemed to be prohibited by reason of the fact that the machines and the mills are so completely interwoven on almost every page that no method of revision appeared adequate to the task.

The new work has therefore taken the form of Volumes III and IV in which the subject-matter of Volumes I and II is added to chapter by chapter. In selecting machines for description the effort has been made to take only those machines that have found practical application. The four volumes have been indexed together and the complete index is inserted in each volume. Another feature of the book that will be noted is the insertion of the mill numbers in a prominent place at the top of the pages in Chapter XLI. It is hoped that both of these changes will add to the convenience and usefulness of the book.

In Chapter XLI there will be found described ninety-four mills representing milling practice in the principal mining centers of the world. Many of these mills are given in great detail and contain figures as to costs, power, water, etc., that should be of the utmost value. Care has been taken in indexing to make this information available. Throughout this chapter tonnages are given in tons of 2,000 pounds unless otherwise stated.

The writer wishes to acknowledge the help that he has received from the manufacturers of milling machinery and from the owners, managers, and superintendents of mills. This help has been given in the most cordial and sympathetic way on all sides. He desires especially to thank Mr. J. R. Finlay for the article on costs which appears in Chapter XLII. For a fuller discussion of this very interesting subject the writer takes great pleasure in recommending Mr. Finlay's book entitled "The Cost of Mining" which he understands

is soon to appear. He desires to thank Mr. Charles Loughridge for his help with the manuscript of the Wilfley table, and Mr. Henry A. Wentworth for the material contributed with reference to electrostatic separation. Credit has been given in the bibliography of the various chapters for all material taken from other sources.

The writer feels especially indebted to Mr. E. S. Bardwell and Mr. E. G. Goodwin for their careful and intelligent work on the book, also to Prof. H. O. Hofman for his criticism of the manuscript, and to Prof. Charles E Locke who has assisted greatly both in criticizing the manuscript and has also reindexed Volumes I and II.

TABLE OF CONTENTS.

PAGES.

PREFACE iii
TABLE OF CONTENTS v
LIST OF ILLUSTRATIONS xi
LIST OF BOOKS AND PERIODICALS xix
TABLE 410. — KEY TO MILL NUMBERS xxi

CHAPTER XXII.

GENERAL PRINCIPLES 1199

Physical properties of minerals, 1199.

CHAPTER XXIII.

PRELIMINARY CRUSHING 1200–1223

Rock breakers of the Blake type, 1200. Farrel-Blake breaker, 1200. Carterville breaker, 1201. Krupp breaker, 1202. Samson breaker, 1202. National Drill and Manufacturing Company breaker, 1203. Denver Engineering Works breaker, 1203. New Century breaker, 1203. Sturtevant, 1205. Humboldt, 1205. Dodge-type breakers, 1205. Sturtevant, 1205. Humboldt, 1206. Spindle or gyrating breakers, 1206. Gates breaker, 1207. Austin, 1210. McCully, 1210. Kennedy, 1213. Krupp, 1215. Hathaway, 1215. Range of adjustment of gyratory breakers, 1218. Size of crushed product, 1218. Materials for wearing parts, 1221. Costs, 1222. Bibliography, 1222.

CHAPTER XXIV.

ROLLS 1224–1245

Principle of roll crushing, 1224. Rolls for dry crushing, 1224. Speed of rolls, 1224. Angle of nip, 1226. Capacity of rolls, 1226. Features and faults of rolls, 1229. Argall rolls, 1230. Superior crushing rolls, 1231. McFarlane rolls, 1232. Sturtevant balanced rolls, 1232. Humphrey rolls, 1234. Rigid rolls, 1235. Sturtevant centrifugal rolls, 1237. Krupp rolls, 1238. Triplex rolls, 1239. Humboldt rolls, 1241. Single-roll crusher, 1241. Corrugated rolls and rolls with inserted teeth, 1242. Sturtevant roll-shell turning device, 1243. Truing roll shells with emery wheel, 1243. Materials for wearing parts, 1243. Life of wearing parts, 1244. Bibliography, 1244.

CHAPTER XXV.

STEAM, PNEUMATIC, AND SPRING STAMPS 1246–1261

Principle, purpose, and classification of stamps, 1246. Steam stamps, principles of action, 1246. Foundations, anvil blocks, mortar beds, sills, and girders, 1247. Pistons, piston rod, dash pot, flange, revolving pulley, stamp stem, stamp shoe, 1247. Steam cylinder, valves, and valve gears, 1249. Single-cylinder stamps, 1249. Cross-compound stamps, 1250. Tandem or steeple-compound stamps, 1250. Comparative performance of single and compound-cylinder Nordberg stamps, 1254. Discharges for steam stamps, 1256. Pneumatic stamps, 1257. Hydraulic stamps, 1257. Lever stamps, 1261. Bibliography, 1261.

CHAPTER XXVI.

GRAVITY STAMPS 1262–1278

Principle of action, 1262. Mortars, 1263. The Nissen stamp, 1263. Merrall's individual mortar, 1264. M. P. Boss individual mortar, 1265. Rapid economy individual mortar, 1266. Traylor double-discharge mortar, 1266. Schorr stay-overflow five-stamp battery mortar, 1266. Standard ten-stamp battery, 1266. Sectional mortars, 1266. Guide blocks, 1266.

PAGES.

Screen openings, 1270. Boss stamp head, 1271. Frames, 1272. Boss wedge-grip tappet, 1272. Proportions between weights of stamp parts, 1272. Cam shafts, 1272. Cams, 1272. Boss cam key, 1273. Canda cams, 1273. Lever-operated latch finger, 1273. Power for stamps, 1274. Order of drop, 1274. Economic range of stamps, 1276. Life of shoes and dies, 1277. Materials for wearing parts, 1277. Bibliography, 1278.

CHAPTER XXVII.

PULVERIZERS OTHER THAN GRAVITY STAMPS 1279–1324

Purpose, 1279. Classification, 1279. Continuous grinding pans, 1282. Colorado Iron Works pan, 1282. Details from Australian practice, 1283. Braun sample grinder, 1284. Sturtevant sample grinder, 1284. Nevada sample grinder, 1284. Stanwood gravity muller, 1285. McKenna laboratory ore grinder, 1285. Tube and ball mills, 1285. Foundations for tube mills, 1286. Liners, 1286. Feed opening, 1287. Discharge opening, 1287. Pebbles, 1288. Feeding tube mills, 1288. Direction of rotation, 1289. Speed of rotation, 1289. Horse-power, 1289. Management of tube mills, 1290. Quality of work done by the tube mills, 1290. Capacity of tube mills, 1291. Consumption of pebbles and liners, 1291. Cost of tube milling, 1291. Efficiency of tube mills, 1292. General tube mill notes, 1294. Alsing tube mill, 1294. Denver Engineering Works tube mill, 1296. Hardinge conical tube mill, 1296. Gates tube mill, 1296. Davidsen tube mill, 1297. Abbé tube mill, 1298. Ferraris ball mill, 1299. Gates ball mill, 1300. Humboldt ball mill, 1301. Wear of steel balls, 1303. Roller mills, 1303. Kent mill, 1303. Wild mill, 1304. Edge runners, 1305. Garfield Chili mill, 1305. Akron Chili mill, 1307. Lane slow-speed mill, 1308. Bryan mills versus high-speed rolls, 1309. Muller grinding mills, 1310. Little Giant quartz mill, 1310. Hathaway gyratory mill, 1310. Improved Huntington mill, 1311. M. P. Boss roller mill, 1313. Sherman centrifugal roller mill, 1313. New Improved Huntington mill, 1313. Huntington mills in general, 1313. Foundations, 1313. Feeding the mill, 1314. Screens for Huntington mills, 1314. Quality of work done by Huntington mills, 1317. Life of wearing parts, 1317. Cost of crushing by Huntington mills, 1318. Disintegrators and pulverizers, 1319. The Stroud mill, 1319. Jeffrey swing-hammer pulverizer, 1321. Williams hinged-hammer pulverizer, 1322. Bibliography, 1323.

CHAPTER XXVIII.

LAWS OF CRUSHING 1325–1340

Nature of material crushed, 1325. Fineness of desired product, 1325. Sources of lost power, 1325. Conditions under which crushing is effected, 1326. Comparison of the various types of crushing machines, 1331. Relative efficiency of regrinding machines, 1331. Power required for crushing, 1334. Theory of tube mill action, 1336. White's experiments, 1336. Bibliography, 1340

CHAPTER XXIX.

PRELIMINARY WASHERS 1341–1344

Washers using rotating stirrers, 1341. Wash trommels, 1341. The Turbo log washer, 1341. Dorr mechanical classifier, 1343. Bibliography, 1344.

CHAPTER XXX.

SIZING SCREENS 1345–1360

Stationary screens, 1345. Rowand inclined screen, 1345. Pratt ore sizer, 1345. Riddles and vibrating grizzlies, 1346. Ferraris shaking screens, 1347. Pulsating screens, 1348. Imperial screen, 1348. Newago separator, 1350. Impact screen, 1351. Vibracone separator, 1352. Traylor centripact screen, 1352. Revolving screens, 1353. Octagonal revolving screens, 1353. Sectional trommels, 1353. Submerged trommel, 1355. The King screen, 1356. Belt screens, 1357. Dunlap Perfect clay screen, 1357. Callow traveling-belt screen, 1358. Bibliography, 1360.

CHAPTER XXXI.

PRINCIPLES OF SCREEN SIZING 1361–1366

Sieve scale, 1361. Limit of screen sizing, 1361. Standardization of

PAGES.

screens, 1361. Measurement of screen openings, 1362. Wire Cloth Manufacturers' Association Standards, 1364. Tyler double-crimped mining wire cloth, 1364. Galvanized and tinned wire cloth, 1365. Mill screens, 1365. Wear of screening surfaces, 1365. Bibliography, 1366.

CHAPTER XXXII.

CLASSIFIERS 1356–1420

History of hydraulic classifiers, 1367. Purposes of classifiers, 1367. Principles of action, 1368. Limitations of hydraulic classifiers, 1368. Difficulties attending classification, 1368. Means of overcoming adverse tendencies, 1369. Classification, 1370. Deep-pocket free-settling classifiers, 1371. The Merrill small cones, 1371. Burgan classifier, 1371. Swain hydraulic classifier, 1371. New Standard hydraulic classifier, 1373. Richards' pocket-vortex classifier, 1373. Single-spigot vortex classifier, 1377. Tank vortex classifier, 1378. Tubular free-settling classifiers, 1381. Double-cone hydraulic classifiers, 1381. Spitzlutten, 1382. Richards' annular vortex classifier, 1382. Shallow-pocket hindered-settling classifiers, 1384. Richards' shallow-pocket hindered-settling classifier, 1384. Richards' undercurrent, 1386. Deep-pocket hindered-settling classifiers, 1387. Richards' pulsator classifier, 1388. Tests on Richards' pulsator, 1391. Pulp thickeners, 1394. Definition of slimes, 1394. Surface-current box classifiers, 1401. Richards-Shepard spitzkasten, 1401. DeKalb classifiers, 1402. Whole-current box classifiers, 1402. Ascending-current cones or cylinders, 1402. The Callow cone, 1402. Sherman system, 1402. Merrill large cone, 1406. Merrill cylindrical clarifying tanks, 1406. Colorado Iron Works Company slime tanks, 1407. Beringer and Stingls slime tank, 1407. Ayton intermittent thick pulp extractor, 1408. Clarifying tanks, 1409. Binkley system, 1409. Slime treatment on the Rand, 1410. Slime treatment in Arizona, 1411. Use of chemicals for slime settling, 1413. Precipitating agents, 1416. Distributing devices, 1417. Distributing or sizing launder, 1417. Mechanical divider or distributor, 1418. Bibliography, 1418.

CHAPTER XXXIII.

LAWS OF CLASSIFYING BY SETTLING IN WATER 1421–1434

Velocity of settling under free-settling conditions, 1421. Free-settling ratios, 1426. Theoretical value for hindered-settling ratios, 1427. Hindered-settling tests, 1428. Full-teeter velocities of quartz and galena, 1430. Application to classifier design, 1432. Extent of classification, 1433. Bibliography, 1433.

CHAPTER XXXIV.

HAND PICKING 1435-1439

Breaking, 1435. Picking tables or belts, 1435. Speed and capacity, 1438. Costs, 1438. Cobbing devices, 1439. Bibliography, 1439.

CHAPTER XXXV.

JIGS 1440–1459

Movable-sieve jigs, 1440. The Hancock jig, 1440. Fixed-sieve jigs, 1444. The New Century jigs, 1444. Krupp jigs, 1446. Classifier jigs, 1447. Woodbury jig, 1447. Richards' pulsator jig, 1453. Differential-motion variable-crank mechanism, 1457. Jig discharges, 1458. Jig beds, 1458. Bibliography, 1459.

CHAPTER XXXVI.

LAWS OF JIGGING 1460–1463

Hindered settling, 1460. Pulsion and suction, 1460. Pulsion, general principles, 1460. Pulsion velocity, 1460. Suction, general principles, 1461. Bring's test, 1461. Effect of jig bed, 1463. Sizing before jigging, 1463. Bibliography, 1463.

CHAPTER XXXVII.

FINE SAND AND SLIME CONCENTRATORS 1464–1511

Classification, 1464. Wilfley table, 1465. Investigation of Wilfley table work, 1469. Sized versus classified feeds for the Wilfley table, 1478. Wilfley table as a slimer, 1478. New Standard concentrator, 1478. Overstrom table, 1479. Sutton, Steele & Steele dry table, 1479. Pinder concentrator, 1479. Dodd buddle, 1481. Card concentrator, 1481. Christen-

PAGES.

sen concentrator, 1484. Overstrom table, 1485. Bartlett simplex concentrator, 1487. Deister tables, 1488. Ferraris patent table, 1490. James concentrator, 1490. James slimer, 1491. Luhrig-Buss concentrator, 1492. The McLeod concentrator, 1492. New Humboldt concentrator, 1493. Woodbury table, 1494. Belt percussion table, 1496. Luhrig slimer, 1496. Bartsch rotary percussion table, 1497. End bumping tables, 1497. General comments on rectilinear tables, 1498. Vanners, 1498. Frue vanner, 1499. Horn rotary slime concentrator, 1499. Akens and Evans slimer, 1500. Johnston vanners, 1501. Suspended frame vanner, 1503. Spadone concentrator belt, 1503. Crack-proof vanner belt, 1503. Shackleford's patent box-cleaning device, 1503. Slimers, 1504. Sherman slimer, 1506. Film sizing tables, 1506. Continuous-surface round tables, 1506. Rag frames, 1507. Dimmick patent slime table, 1507. Caribou riffle, 1509. La Point suspended riffle cleats, 1509. Kieves, 1510. Depth of bed, 1510. Bibliography, 1511.

CHAPTER XXXVIII.

AMALGAMATION 1512–1520

The amalgams, 1512. Amalgamation, 1512. Amalgamating plates, 1512. Preparation of pulp previous to amalgamation, 1514. Material for plates, 1514. Absorption by plates, 1514. Effect of temperature on amalgamation, 1516. Mercury traps, 1516. Amalgamators, 1517. Pan amalgamation, 1517. Squeezing amalgam, 1517. Sealing retorts, 1519. Bibliography, 1520.

CHAPTER XXXIX.

MISCELLANEOUS PROCESSES OF SEPARATION 1521–1569

Magnetic concentration, 1521. Principles, 1521. Magnetic separators of the primary-magnet type, 1521. Wetherill separator, 1521. Ferraris separator, 1525. Ball-Norton, 1527. Leighton, 1528. Ferraris drum-type separator, 1528. Eriksson's electromagnetic separator, 1529. Humboldt separators, 1530. Cranberry magnet, 1530. Cobbing magnets, 1531. Separators of the secondary or induced-magnet type, 1533. International, 1533. Ulrich, 1535. Mechernich, 1535. Gröndal, 1537. Forsgren, 1538. Dings, 1540. Knowles New Century, 1541. Cleveland-Knowles, 1542. Roasting for magnetism, 1543. Effect of carbon, 1544. Calcining, 1544. Experiments, 1544. Furnaces, 1545. Electrostatic separators, 1549. Blake-Morscher electrical ore separator, 1550. Huff electrostatic separator, 1551. Pneumatic separators, 1553. Freid gravity dry-process separator, 1553. Sutton, Steele, and Steele dry table, 1554. Flotation processes, 1555. Theory of flotation processes, 1555. Elmore vacuum process, 1556. Flotation process of the Minerals Separation Company, Limited, 1560. Potter and Delprat processes, 1561. DeBavay process, 1562. Macquisten's flotation process, 1563. Separation by decrepitation and screening, 1565. Separation by crushing and screening, 1566. Molybdenite dressing, 1567. Bibliography, 1568.

CHAPTER XL.

ACCESSORY APPARATUS 1570–1610

Concentrate drying bins, 1570. Filter bins, 1570. Samplers, 1570. Hand sampling, 1570. Mechanical samplers, 1571. Lamb automatic tailings sampler, 1573. Principles of sampling, 1574. Feeders, 1578. Challenge feeder, 1578. Perfection ore feeder, 1578. Colorado Iron Works Company feeder, 1580. Push feeders, 1581. Conveyors, 1582. Classification, 1582. Push or drag conveyors, 1582. Screw conveyors, 1582. Drag or disc conveyors, 1583. Push conveyors, 1584. Carrying conveyors, 1585. Sand wheels, 1586. Sand pumps, 1587. Traylor centrifugal pumps, 1588. Lancaster rotary pumps, 1589. Displacement pumps, 1589. Dewatering wheels, 1590. Fleming dewatering wheel, 1590. Rogers dewatering screen, 1591. Launders, 1592. Driers, 1595. Drying floors, 1596. Cylindrical driers, 1596. Cyanide machinery, 1600. Weighing devices, 1603. Blake-Denison weigher, 1603. Libra scales, 1605. Friction clutches, 1606. Removal of wood, 1607. Hoists, 1608. Bibliography, 1609.

CHAPTER XLI.

SUMMARY OF PRINCIPLES AND OUTLINES OF MILLS 1611–1926

Summary of principles, 1611. Combinations of principles of separation,

PAGES.

1611. Schemes of mill treatment, 1613. Methods of study, 1613. Order of mills, 1616. Washing followed by hand picking and sizing, 1616. Amalgamation followed by concentration and lixiviation of concentrates and tailings, 1617. Amalgamation followed by concentration and lixiviation of concentrates, 1620. Amalgamation followed by concentration and lixiviation of tailings, 1623. Amalgamation followed by lixiviation and concentration, 1631. Amalgamation followed by lixiviation, 1634. Amalgamation followed by concentration, 1652. Concentration followed by lixiviation, 1665. Lixiviation, 1676. Mills saving only silver values, 1679. Mills saving silver and lead values, 1680. Mills saving only lead values, 1706. Mills saving silver, lead, and zinc values, 1713. Mills saving gold, silver, lead, and zinc values, 1748. Mills saving gold, silver, lead, and copper values, 1768. Mills saving lead and zinc values, 1780. Mills saving lead, zinc, and iron values, 1783. Mills saving lead, zinc, and copper values, 1794. Mills saving zinc and manganese values, 1804. Mills saving iron and manganese values, 1814. Mills saving only iron values, 1815. Mills saving iron and copper values, 1828. Mills saving gold and copper values, 1831. Mills saving gold, silver, and copper values, 1836. Mills saving copper and sulphur values, 1888. Mills saving only copper values, 1891. Mills saving only pyrite, 1913. Mills saving tin and tungsten values, 1915. Mills saving only asbestos, 1916. Mills saving only mercury values, 1919. Mills saving only diamonds, 1921. Bibliography, 1922.

CHAPTER XLII.

GENERAL IDEAS ON MILLING 1927–1997

Power, 1927. Power tests at Mill 173, 1927. Power required at Mill 162, 1930. Lubrication and care of journals, 1930. Lighting, 1931. Labor in the mills, 1931. Water consumption, 1931. Percentage of extraction, 1932. Schedules for calculating the value of zinc ores, 1932. Costs and extractions, 1939. Cost of erecting mills, 1939. General principles governing working costs, 1940. Cost of producing copper in Lake Superior district, 1948. Cost of producing copper in Montana, 1950. Cost of producing copper in Arizona, 1953. Cost of producing copper in Utah, 1955. Costs of Tennessee Copper Company, 1956. Costs of Granby Consolidated, 1957. Costs at Mount Lyell, Tasmania, 1957. Costs in various other districts, 1958. General considerations on costs of copper production, 1958. Cost of producing silver and lead in Cœur d'Alene, 1960. Cost of producing silver and lead at Broken Hill, 1964. Cost of producing silver and lead in Colorado, 1965. Cost of producing silver and lead in Utah, 1966. Cost of producing lead and zinc in Missouri, 1968. Generalizations on lead mining, 1974. Cost of producing gold in Cripple Creek, 1974. Cost of producing gold at Douglas Island, Alaska, 1975. Cost of producing gold in Grass Valley, California, 1977. Cost of producing gold in the Black Hills, 1977. Cost of producing gold in San Juan district, Colorado, 1978. Cost of producing gold at El Oro, Mexico, 1980. Cost of producing gold in Kolar district, India, 1981. Cost of producing gold in the Witwatersrand, South Africa, 1983. Cost of mining and milling iron ores in Eastern United States, 1986. Cost of mining and milling tungsten ores in Boulder County, Colorado, 1987. Testing, 1988. Screens, 1988. Bardwell sorting tube, 1988. Classifiers, 1989. Jigs for testing purposes, 1989. Wilfley table for testing, 1990. Testing for flotation, 1991. Testing by heavy solution, 1993. Magnetic separators, 1993. Roasting for magnetic separation, 1995. Bottle amalgamation, 1996. Measurement of mineral particles, 1996. Testing for a process, 1996. Regular mill testing, 1996. Bibliography, 1997.

APPENDIX.

TABLES AND OTHER USEFUL INFORMATION 1998–2007

Standard gauges for brass and iron wire,1998. Table of diameters and areas of circles, 2000. Table of quartz diameters and velocities, 2003. Per cent of voids in crushed limestone, 2006. Effect of distance hauled upon settlement in wagon, 2007. General Bibliography of Ore Dressing Literature, 2008.

BIBLIOGRAPHY 2009

LIST OF ILLUSTRATIONS.

FIGURES.		PAGES.
561.	Sectional View of Farrel "Style B" Breaker	1201
562.	Section of Samson Breaker	1202
563.	The Case Laboratory Breaker	1204
564.	Section Sturtevant Breaker	1205
565.	Sectional View of Style "K" Gates Rock and Ore Breaker	1206
566.	Head Suspension of Gates Gyratory Breaker	1207
567.	Gates Breaker Fitted with Short Head and Concaves	1209
568.	Sectional View of McCully Gyratory Breaker	1211
569.	Diagram of Capacities for McCully Breaker	1212
570.	Manganese-Steel Mantle for McCully Breaker	1213
571.	Sectional View of Kennedy Gyratory Breaker	1214
572.	The Krupp Gyratory Breaker	1215
573.	The C. L. Hathaway Gyratory Breaker	1216
574.	Sketch Showing Fallacy of Large Range of Adjustment for Gyratory Breakers,	1218
575.	Diagram Showing Size of Crushed Products	1219
576*a*.	Section of Cast-Iron Head Center	1221
576*b*.	Section of Mantle	1221
577*a*.	Gates Manganese-Steel Mantle Showing Method of Attachment	1221
577*b*.	Bottom View	1221
578.	Diagram Showing Proper Speed of Rolls and Maximum Size of Feed, dry Crushing	1225
579.	Diagram Showing Percentage Reduction and Corresponding Percentage of Finished Products	1227
580.	Diagram Giving Capacity of Finished Production in Cubic Feet per Hour at Given Speed and Sizes	1228
581*a*.	Plan of Argall Rolls	1230
581*b*.	Side Elevation of Argall Rolls	1231
582.	Superior Crushing Rolls	1232
583.	McFarlane Parallel Rolls	1233
584.	Sturtevant Balanced Rolls	1233
585*a*.	Side Elevation of Humphrey Crushing Rolls	1234
585*b*.	Cross-section of Humphrey Crushing Rolls	1234
586*a*.	Denver Engineering Works Company's Rigid Rolls	1236
586*b*.	Cross-section of Rigid Rolls	1236
587.	Cross-section of Sturtevant Centrifugal Rolls	1238
588.	Side Elevation Fried. Krupp High Speed Rolls	1238
589.	Triplex Rolls	1240
590.	McLanahan's Single-Roll Crusher	1241
591.	Allis-Chalmers Toothed Rolls, Housing Removed	1242
592.	Sturtevant Roll Shell Turning Device	1243
593.	Anvil Block of Nordberg Steam Stamp	1247
594*a*.	Plan of Mortar, Nordberg Steam Stamp	1248
594*b*.	Mortar of Nordberg Steam Stamp	1248
595*a*.	Nordberg Steam Stamp	1249
595*b*.	Side Elevation	1249
596*a*.	Indicator Diagram Top Steam Nordberg 20 by 24-Inch Stamp	1250
596*b*.	Bottom Steam. Nordberg Stamp	1251
596*c*.	Velocity Diagram	1251
597*a*.	Nordberg Steeple-Compound Stamp	1252
597*b*.	Nordberg Steeple-Compound Stamp	1253
598*a*.	High-Pressure Blow Card	1255
598*b*.	High-Pressure Lift Card	1255
598*c*.	Low-Pressure Blow Card	1255
599*a*.	Detail Section of Cylinder. Denny Hydraulic Stamp	1257

FIGURES.		PAGES.
599*b*.	Cross-section. Denny Hydraulic Stamp	1258
599*c*.	Elevation Denny Hydraulic Stamp	1259
599*d*.	Guide Block of Denny Stamp	1260
600.	Rapid Economy Stamp, Operating Mechanism	1261
601*a*.	Nissen Type AA Mortar	1263
601*b*.	Accessories	1263
602*a*.	Nissen Type B Mortar	1264
602*b*.	Chuck Block and Screen Bands	1264
603.	M. P. Boss Individual Mortar	1265
604.	Traylor Double-Discharge Mortar	1266
605*a*.	Schorr Stay Overflow Mortar	1266
605*b*.	Double-Discharge Schorr Mortar	1266
606.	Boss Standard Mortar	1267
607*a*.	Modern Ten-Stamp Battery	1268
607*b*.	Modern Homestake-Type Mortar	1269
608.	Traylor Sectional Mortar	1269
609*a*.	Elevation of Denny Sectional Guide Blocks	1269
609*b*.	Plan	1269
609*c*.	End Elevation	1269
609*d*.	Section	1269
610.	Wellman-Seaver-Morgan Sectional Stamp-Guides	1270
611.	Fried. Krupp Guide Blocks	1270
612.	Foote Battery Screen	1270
613.	Pachuca Stamp-Battery	1271
614.	Boss Wedge-Grip Tappet	1272
615*a*.	Krupp Cam Shaft	1273
615*b*.	Cam and Key	1273
616.	Boss Cam Key	1273
617.	Canda Cam	1273
618.	Boss Lever-Operated Latch Finger	1274
619.	Power Diagram for Stamp Mills	1275
620*a*.	Cams and Cam Shaft for Ten-Stamp Battery	1276
620*b*.	End View	1276
621*a*.	Cross-section of Continuous Grinding Pan	1283
621*b*.	Plan	1283
622.	The Stanwood Gravity Muller	1285
623.	McKenna Laboratory Ore Grinder	1285
624.	El Oro Tube Mill Lining	1287
625.	Scoop Feed for Tube Mill	1287
626*a*.	J. R. Alsing Tube Mill, Side Elevation	1295
626*b*.	End View	1295
627.	Hardinge Conical Tube Mill. Section	1297
628.	Section of Davidsen Tube Mill	1298
629*a*.	Model Showing Spiral Feed of Abbé Tube Mill	1298
629*b*.	Spiral End Discharge	1298
630*a*.	Ferraris Ball Mill	1299
630*b*.	Section	1299
631.	Section of Gates Ball Mill	1301
632*a*.	Cross-section of Humboldt Ball Mill	1302
632*b*.	Longitudinal Section	1302
633.	Cross-section of Kent Mill	1303
634.	The Wild Mill	1304
635.	The Garfield Chili Mill	1306
636.	Mortar Hub of Akron Chili Mill	1307
637.	The Lane Slow-Speed Mill	1308
638.	Essential Features of Merrill's Mill	1310
639.	The Hathaway Gyratory Mill	1311
640*a*.	Improved Huntington Mill	1312
640*b*.	Plan	1312
641.	Rolled Slot Screen Before and After Using	1315
642.	Punched Slot Screen Before and After Using	1316
643*a*.	Sectional Side View of Stroud Disintegrator	1319
643*b*.	Sectional End View	1319
644*a*.	Jeffrey Swing Hammer Pulverizer. Housing Removed	1321
644*b*.	Jeffrey Swing Hammer Crusher	1322
[illegible]	Diametral Crushing	1327

FIGURES.		PAGES.
645*b*.	Radial Crushing	1327
645*c*.	Shearing	1327
646.	Graphical Representation of Tables 466, 467, and 468	1327
647.	Crushing Effect of Rolls	1330
648.	Diagrammatic Representation of Tube Mill Action	1336
649.	Paths of Motion in Tube Mill	1337
650.	Interior of Tube Mill. Outer Layer of Balls Continuous	1339
651*a*.	Longitudinal Section of Krupp Wash Trommel	1342
651*b*.	End View	1342
652.	The Turbo Log Washer	1343
653.	Dorr Mechanical Washer or Classifier	1343
654.	Longitudinal Section of Rowand Screen	1346
655.	Section of Pratt Ore Sizer	1347
656.	Ferraris Shaking Screen	1348
657*a*.	Shaking Riddle	1348
657*b*.	Shaking Riddle, Ferraris Principle Applied	1348
658*a*, *b*, *c*, *d*.	Mechanism of the Imperial Screen	1349
658*e*.	The Imperial Ore Screen	1349
659.	The Newago Separator	1350
660.	The Impact Screen	1352
661.	Section of the Vibracone Separator	1352
662.	Sketch Showing Principle of Centripact Screen	1353
663.	Octagonal Revolving Screen	1354
664.	Denver Engineering Works Revolving Grizzly	1354
665.	Gates Revolving Screen	1355
666*a*.	End View of Submerged Trommel	1355
666*b*.	Longitudinal Section	1355
667.	The King Screen	1356
668.	The Dunlap Perfect Clay Screen	1357
669*a*.	Side Elevation of Callow Duplex Screen	1358
669*b*.	Plan	1359
670.	Snyder Micrometer Caliper	1363
671.	Sorting Column of Evans Classifier	1369
672.	Diagram Showing Helical Currents	1369
673.	Helical Currents Unwrapped	1370
674*a*.	Side Elevation of Burgan Classifier	1372
674*b*.	Plan	1372
674*c*.	End Elevation	1372
675.	Sorting Column of Swain Hydraulic Classifier	1372
676.	Swain Hydraulic Classifier	1373
677.	New Standard Hydraulic Classifier	1373
678*a*.	Plan of Richards' Hydraulic Classifier	1374
678*b*.	Longitudinal Section	1374
679.	Cumulative Curves for Roll Crushed and Stamp Crushed Material, also Compromise Curve	1376
680.	Single-Spigot Vortex Classifier with Rectangular Pockets	1377
681.	Single-Spigot Vortex Classifier with Cylindrical Pocket	1377
682.	Triangle of Sizes and Weights	1378
683*a*.	Side Elevation of Tank Vortex Classifier	1379
683*b*.	Plan	1379
684.	Curve Showing Relation of Size to Tonnage	1380
685.	Colorado Iron Works Cone Classifier	1381
686.	Fried. Krupp Spitzlutten	1382
687.	Richards' Annular Vortex Classifier for Coarse Grains	1383
688.	Richards' Annular Vortex Classifier for Fine Grains	1384
689*a*.	Side Elevation of Richards' Shallow-Pocket Hindered-Settling Classifier	1385
689*b*.	Plan	1385
689*c*.	Cross-section	1386
690.	Richards' Undercurrent	1386
691*a*.	Longitudinal Section, Wolf-Tongue Classifier	1387
691*b*.	Plan	1387
691*c*.	Cross-section	1388
692*a*.	Side Elevation of Richards' Pulsator Classifier	1388
692*b*.	Plan	1389
692*c*.	Sectional End Elevation	1389
693.	Tree of Pulsator Classifier Test	139'

FIGURES.		PAGES.
694.	Graphical Representation of Sizing Test upon Pulsator Classifier Products	1396
695.	Richards-Shepard Spitzkasten or Perforated Board Classifier	1401
696*a*.	Callow Settling Cone	1403
696*b*.	Plan	1403
697.	Coarse Sand Tank, Sherman System	1405
698.	Sherman Settling Tank System	1405
699.	Merrill Conical Settling Tanks	1406
700.	Merrill Cylindrical Clarifying Tank	1406
701.	Colorado Iron Works Central-Feed Slime Tank	1407
702.	Colorado Iron Works Side-Feed Slime Tank	1407
703.	The Ayton Intermittent Thick Pulp Extractor	1408
704.	Binkley's Settling System	1409
705.	Skimming Launder	1409
706*a*.	Tay's Clarifying Tank	1410
706*b*.	Plan	1410
707.	Slime System at Van Ryn Gold Mines Estate, South Africa	1411
708*a*.	Section of Scobey Sand Box	1412
708*b*.	Plan	1412
709.	Diagram Illustrating the Effect of Electrolytes in Settling Slime	1415
710*a*.	Mechanical Divider	1418
710*b*.	Section Showing Pockets	1418
711.	Column of Water to Support a Cube of Mineral	1421
712.	Logarithmic Curves of Average Velocities and Diameters of the Complete Series	1424
713.	Separation of Quartz and Galena by Hindered-Settling Classifier and Sieves	1429
714.	Hindered-Settling Classifier as arranged for Full-Teeter Test	1430
715.	Separation of Quartz and Galena by Free-Settling Classifier and Sieves	1434
716.	Small Sorting Table. Krupp Type	1436
717.	Suspended Sorting Table. Krupp Type	1436
718*a*.	Large Annular Sorting Table. Section	1437
718*b*.	Plan	1437
719.	Revolving Picking Table	1437
720*a*.	Outline of the Hancock Jig	1440
720*b*.	Plan	1440
720*c*.	Cross-section	1440
721.	New Century Jig	1444
722*a*.	New Century Middlings Discharge	1445
722*b*.	Section Through Centers	1445
722*c*.	Middlings Draw Valve	1445
723*a*.	New Century Double End-Draw for Coarse Middlings. Plan	1445
723*b*.	Section on "A–B"	1445
723*c*.	End View from Interior of Tank	1445
724.	Hodge Jig	1446
725.	Krupp Jig. Harz Type	1446
726*a*.	Woodbury System — Longitudinal Section. Insert	1447
726*b*.	Plan. Insert	1447
727.	Flow Sheet of Evans Jigs. Mill 162	1451
728.	Flow Sheet of Woodbury Classifiers and Jigs. Mill 162	1452
729*a*.	Richards' Pulsator Jig. Elevation	1454
729*b*.	Plan	1454
729*c*.	Section	1454
730*a*.	Side Elevation. Quick Return Motion Mechanism	1457
730*b*.	Section	1457
731.	Diagrammatic Representation of Action of Differential-Motion Variable-Crank Mechanism	1457
732.	Monteponi Jig Discharge	1458
733.	No. 5 Wilfley Table	1465
734.	Wilfley Table Head Motion	1466
735.	Deck of No. 5 Wilfley Table	1467
736.	Deck Construction of No. 5 Wilfley Table	1467
737.	Usual Division of Products on a Wilfley Table	1470
738.	Ideal Sketch of the Arrangement of Grains by a Wilfley Table	1473
739.	Ideal Sketch of Classifier Product	1476
740.	Pinder Concentrator	1480
741.	Top of Pan of Pinder Concentrator	1480
742*a*.	Dodd Buddle. Plan	1483

FIGURES.		PAGES.
742*b*.	Elevation	1482
743.	Card Table Elevation	1483
744.	Card Table Head Motion	1483
745.	Deck of Card Table	1484
746.	Section of Card Table Riffles	1484
747.	Section of Square Riffles	1484
748.	Tipping Frame of Overstrom Table	1485
749.	Head Motion of Overstrom Table	1486
750.	Overstrom Table Top	1486
751.	The Bartlett Simplex Concentrator	1487
752.	The No. 2 Deister Table	1488
753.	Riffles on No. 3 Deister Table	1489
754.	The Ferraris Patent Table	1490
755.	The James Table	1491
756.	The James Slimer	1491
757.	The McLeod Concentrator	1493
758.	The New Humboldt Concentrator	1494
759.	Frame of New Woodbury Concentrator	1495
760.	The New Woodbury Concentrator	1495
761.	Belt Percussion Table	1496
762.	The Bartsch Rotary Percussion Table	1497
763.	The Horn Rotary Slime Concentrator	1499
764.	The Akens and Evans Slime Concentrator	1500
765.	Frame of Johnston Vanner	1501
766.	Exaggerated Diagram Showing Johnston Vanner Motion	1501
767.	Johnston Vanner Suspension used at Mill 167	1503
768.	Section of "Crack-Proof" Vanner Belt	1503
769*a*.	Shackleford's Patent Box-Cleaning Device	1503
769*b*.	Longitudinal Section	1503
770.	Frame of Wilfley Slimer	1504
771.	The Wilfley Slimer	1505
772.	The Sherman Slimer	1506
773*a*.	Plan of Rag Frames	1508
773*b*.	Sectional Elevation	1508
774.	Dimmick Slime Table	1507
775*a*.	Caribou Riffle	1509
775*b*.	Cross-section at a-a	1509
776.	La Point Suspended Riffles	1510
777*a*.	Longitudinal Section of Copper Plate Table	1513
777*b*.	End Elevation	1513
778*a*.	Elevation. Shaking Amalgamating Table	1513
778*b*.	End Elevation	1514
779.	Amalgamating Table with Back Deflectors	1514
780.	Absorption of Mercury by Copper Plate	1515
781.	Absorption of Mercury by Plates of Different Metals	1515
782.	Box Trap. Krupp Type	1516
783.	Longitudinal Section of Pierce Amalgamator	1517
784*a*.	Fried. Krupp Amalgam Press. Side Elevation	1518
784*b*.	Transverse Section on Line A B	1518
785.	Power Amalgam Press	1519
786.	Method of Sealing Retorts	1519
787.	Principle of Wetherill Type "E" Separator	1522
788.	Cross-section Wetherill Type "E" Separator	1523
789*a*.	Ferraris Magnetic Separator. Elevation	1526
789*b*.	Plan	1526
789*c*.	Cross-section	1526
790.	Ball-Norton Belt-Type Magnetic Separator	1527
791.	Sectional View of Leighton Magnetic Separators	1529
792.	Ferraris Drum-Type Separator	1529
793*a*.	Eriksson's Magnetic Separator. Elevation	1530
793*b*.	Plan	1530
793*c*.	Section	1530
794.	Cranberry Drum-Type Magnet	15?
795*a*.	Cobbing Magnet at Mill of Manhattan Asbestos Company	1
795*b*.	Side Elevation	
796*a*.	Cobbing Magnet at Broughton Asbestos Company's Mill	

FIGURES.		PAGES.
796*b*.	Side Elevation	1532
797.	Eastwood Lifting Magnet	1532
798*a*.	Bilharz Cobbing Magnet	1533
798*b*.	Plan	1533
799.	The International Separator	1534
800.	Armature of International Separator	1533
801.	Ullrich Separator	1536
802.	Mechernich Magnetic Separator	1536
803.	No. 5 Gröndal Separator	1538
804*a*.	Forsgren's Magnetic Separator	1539
804*b*.	Cross-section	1539
804*c*.	Section Showing Secondary Poles	1539
805.	Ding's Magnetic Separator	1540
806.	Knowles' New Century Magnetic Separator	1541
807.	Cleveland-Knowles Magnetic Separator	1543
808.	Diagram Showing Effect of Roasting Pyrite for Varying Lengths of Time	1545
809.	Calcining Furnace used at Friedrichssegen, Germany	1546
810.	Section of Wilfley Roasting Furnace	1547
811.	Principle of Action of Blake-Morscher Separator	1550
812.	Blake-Morscher Separator. Vertical Section	1551
813.	Principle of the Huff Electrostatic Separator	1552
814.	Freid Gravity Dry-Process Separator	1554
815.	Section of Riffles of Sutton, Steele, and Steele Table	1554
816.	Elmore Vacuum Oil Concentrator	1557
817.	DeBavay Flotation Apparatus	1563
818*a*.	Macquisten Tube. Elevation and Partial Section	1564
818*b*.	Plan	1564
818*c*.	End View	1564
819*a*.	Side Elevation of Drying Bin at Mill 100	1571
819*b*.	Front Elevation	1571
820*a*.	Front Elevation of Riffle Cabinet	157
820*b*.	Plan	
820*c*.	End Elevation	
820*d*.	Riffle	
821.	The Lamb Automatic Tailings Sampler	
822.	Taylor and Brunton Sample Riffles	
823*a*.	Driving Discs of Perfection Ore Feeder	
823*b*.	Section	
823*c*.	Elevation of Perfection Ore Feeder	
823*d*.	Plan	
824.	Perfect Feeder. Elevation	
825.	Push Feeders at Mill 113	
826*a*.	Old Style Helical Conveyor Flight. Section	1582
826*b*.	Helicoid Conveyor Flight. Section	1582
827*a*.	Push Conveyor, Forward Stroke	1584
827*b*.	Push Conveyor, Backward Stroke	1584
828.	Self-Oiling Carrier for Conveyor Belts	1585
829.	Automatic Self-Propelling Tripper	1586
830.	Elevation of Sand Wheel	1587
831*a*.	Runner of Traylor Centrifugal Sand Pump	1588
831*b*.	Liner	1588
831*c*.	Follower	1588
832.	Traylor Centrifugal Sand Pump	1589
833.	Lancaster Rotary Pump. Section	1590
834*a*.	Fleming Dewatering Wheel	1591
834*b*.	Front View	1591
835.	Dewatering Wheel at Mill 141	1591
836*a*.	Rogers' Dewatering Screen. End Elevation	1592
836*b*.	Side Elevation	1592
837.	Overstrom's Launder Diagram	1593
838.	Diagrammatic Sketch of Grill Four-Compartment Drier	1596
839*a*.	Section of Alsing Improved Drier	1598
839*b*.	Plan	1598
839*c*.	Cross-section	1598
840.	Side Elevation, American Process Company's Drier	1599
	Plan View	1599

FIGURES.		PAGES.
840*c*.	End Elevation	1599
841.	Blaisdell Tank Plug	1600
842*a*.	Blaisdell Excavator. Side Elevation	1601
842*b*.	Plan	1602
842*c*.	End Elevation	1602
843.	Blaisdell Slime Agitator	1603
844.	Weighing and Recording Mechanism of Blake–Denison Weigher	1604
845*a*.	Libra Scales. Side View	1605
845*b*.	End View	1605
846.	Caldwell Friction Clutch	1606
847*a*.	Separator for Removing Wood. Section	1607
847*b*.	Plan	1608
847*c*.	End Elevation	1607
848*a*.	Longitudinal Section of Pilling Air Hoist	1608
848*b*.	Cross-section	1608
849.	Pulp Flow Diagram. Mill 108	1648
850.	Solution Flow Diagram. Mill 108	1649
851.	Lubricating Device for Journals	1930
852.	Bardwell Sorting Tube	1988
853.	Cumulative Curves of Sorting Tube Tests	1990
854*a*.	12-Spigot Classifier	1990
854*b*.	End View	1990
854*c*.	Plan	1990
855.	Hand-Jig for Testing	1991
856*a*.	Laboratory Wilfley Table. Elevation	1991
856*b*.	Plan	1992
857.	Van Meter's Oil Testing Device	1992
858.	Longitudinal Section of Delameter Coal-testing Device	1993
859.	Double-Pole Electromagnet	1993
860*a*.	Laboratory Wetherill Separator	1994
860*b*.	Cross-section	1994

LIST OF BOOKS AND PERIODICALS REFERRED TO IN VOLUMES III AND IV.

BOOKS.

Allen, Robert. West Australian Metallurgical Practice. Kalgoorlie (1906).

Bell, Robert N. Ninth Annual Report on the Mining Industry of Idaho for the Year 1907. Boise, Idaho, 1908.

Cirkel, Fritz. Asbestos, Bulletin of the Department of the Interior, Mines Branch, Dominion of Canada, Ottawa, 1905.

Clark, Donald. Australian Mining and Metallurgy. Melbourne, 1904. Critchley Parker.

Collett, Harold. Water Softening and Purification. London, 1896.

Cushman, A. S. Effect of Water on Rock Powders. Bulletin 92, United States Department of Agriculture, Bureau of Chemistry. Washington, D. C.

Cushman, A. S. and Prevost Hubbard. The Decomposition of the Feldspars. Bulletin United States Department of Agriculture. Washington, D. C.

Goupillière, Haton de la. Exploitation des Mines. Edition 2. Paris, 1896.

Hubbard, Prevost. See Cushman, A. S.

Ingalls, W. R. Report of the Commission Appointed to Investigate the Zinc Resources of British Columbia and the Conditions Affecting their Exploitation. Bulletin of the Department of the Interior, Mines Branch Dominion of Canada. Ottawa, 1906.

Julian, H. Forbes and Edgar Smart. Cyaniding of Gold and Silver Ores. Edition 2. London, 1907.

La Coux, H. de. Industrial Uses of Water. Translation by A. Morris. London, 1903.

Morris, A. See la Coux.

Poynting, John Henry and J. J. Thomson. Text Book of Physics. London, 1902.

Preston, E. B. California Gold Mill Practices. California State Mining Bureau. Sacramento, California, 1901.

Rose, T. Kirke. Metallurgy of Gold. Fourth Edition. London, 1902.

Stokes, Sir George Gabriel. Mathematical and Physical Papers. Cambridge, University Press, 1901.

Thomson, J. J. See Poynting, John Henry.

PERIODICALS.

Am. Inst. Min. Eng. = Transactions of the American Institute of Mining Engineers. Annually. New York.

Ann. des Mines de Belgique = Annales des Mines de Belgique. Annually. Bruxelles.

Austr. Inst. Min. Eng. = Transactions of the Australasian Institute of Mining Engineers. Annually. Melbourne, Australia.

Austr. Min. Standard = Australian Mining Standard. Electrical Record and Financial Review. Weekly. Melbourne, Australia. Critchley Parker.

Berg. u. Hutt. Jahrb. = Berg und Hüttenmännisches Jahrbuch. Quarterly. Vienna.

Can. Min. Inst. = Journal of the Federated Canadian Mining Institute. Vols. I to III (1896–1898); Journal of the Canadian Mining Institute, Vol. I. (1898), to date. Annually. Ottawa, Canada.

Chemical Engineer = The Chemical Engineer. Monthly. Chicago.

Copper Handbook. Annually. Houghton, Michigan. Horace J. Stevens.

Electrochemical and Metallurgical Industry. Monthly. New York. Electrochemical Publishing Company.

Engineering News = Engineering News and American Railway Journal. Weekly. New York.

Eng. & Min. Jour. = Engineering and Mining Journal. Weekly. New York.

Equipment News. Published monthly by the Hendrie and Bolthoff Manufacturing and Supply Company, Denver, Colorado.

Inst. Min. & Met. = Transactions of the Institution of Mining and Metallurgy. Annually. London.

Iron Age. Weekly. New York. David Williams Company.
Iron Trade Review. Weekly. Cleveland, Ohio. Penton Publishing Company.
Jour. Am. Chem. Soc. = Journal of the American Chemical Society. Monthly. Easton, Pennsylvania.
Jour. Chem. Met. & Min. Soc. = Journal of the Chemical Metallurgical and Mining Society of South Africa. Annually. Johannesburg, South Africa.
Los Angeles Mining Rev. = Los Angeles Mining Review. Los Angeles, California.
Mineral Industry. Annually. New York. Hill Publishing Company.
Mineral Resources = Mineral Resources of the United States. Annually. United States Geological Survey. Washington, D. C.
Mines & Minerals = Mines and Minerals. Monthly. Scranton, Pennsylvania.
Min. & Met. Jour. = Mining and Metallurgical Journal. Denver, Colorado.
Min. & Sci. Press = The Mining and Scientific Press. Weekly. San Francisco.
Mining Reporter = Mining Reporter. Weekly. Denver, Colorado. 1873 to 1907 inclusive. 1908 to date as Mining Science.
Mining Science. = Mining Science. Weekly. Denver, Colorado. See Mining Reporter.
Mining World = The Mining World. Weekly. Chicago, Illinois.
Oest. Zeit. = Oesterreichische Zeitschrift für Berg und Hüttenwesen. Weekly. Vienna.
Pacific Miner. Portland, Oregon.
Philosophical Magazine = Philosophical Magazine and Journal of Science. Monthly. London.
S. Afric. Min. Review = South African Mining Review. Johannesburg. South Africa.
Western Chem. & Met. = Western Chemist and Metallurgist. Published monthly by the Western Association of Technical Chemists and Metallurgists. Denver, Colorado.
Zeitschrift des Vereines Deutscher Ingenieure. Weekly. Berlin.

TABLE 410.

KEY TO MILL NUMBERS.

Mill No. (a)	Name.	Location.	Economic Minerals.	Gangue.	Capacity. Tons in Hours.
95.	Elkton Consolidated Mining and Milling Company.	Elkton, Colorado.	Native gold, calaverite, and pyrite.	Quartz, fluorite, and decomposed granite.	
96 (b).	Central Mill of the North Star Mines Company.	Grass Valley, California.	Native gold and auriferous pyrite.	Quartz and diabase.	135 in 24.
97.	Boston-Richardson Mining Company.	Goldboro, Nova Scotia, Canada.	Auriferous arsenopyrite.	Quartz and slate.	175 in 24.
98.	Haile Gold Mining Company.	Haile Gold Mine, Lancaster County, South Carolina.	Native gold and auriferous pyrite.	Siliceous.	150 in 24.
99.	Selenide Silver Mill.	Lebong-Donok, Sumatra.	Selenium, silver, and iron minerals.	Siliceous.	90 in 10(c).
100.	Camp Bird, Limited.	Ouray, Colorado.	Native gold and silver, argentiferous and auriferous pyrite, galena, sphalerite, and a little chalcopyrite and magnetite.	Quartz, rhodonite, and calcite.	230 in 24.
101.	Combination Mill of the Goldfield Consolidated Mining Company.	Goldfield, Nevada.	Gold and silver in iron oxides and sulphides, also copper with small values in zinc, bismuth, and antimony.	Silicified dacite.	100 in 24.
102.	Custom Mill of the Nevada-Goldfield Reduction Company.	Goldfield, Nevada.	Various gold and silver ores.	Various.	100 in 24.
103.	Liberty Bell Gold Mining Company.	Telluride, Colorado.	Native gold and silver, also argentiferous and auriferous sulphides.	Quartz and calcite.	350 in 24.
104.	Pittsburg-Silver Peak Gold Mining Company.	Blair, Nevada.	Gold and silver.	Quartz and alaskite.	400 (d) in 24.
105.	The Great Boulder Perseverance Mine.	Kalgoorlie, Australia.	Argentiferous and auriferous tellurides, pyrite, and arsenopyrite.	Gray and green schists and quartz.	480 in 24.
106 (e).	Homestake Mining Company.	Lead, South Dakota.	Auriferous oxides and sulphides, mainly pyrite, pyrrhotite, chalcopyrite, and arsenopyrite.	Quartz and mica schist or slate.	4000 in 24.
107.	Luipaards-Vlei Estate.	Witwatersrand, South Africa.	Native gold and auriferous pyrite.	Hard conglomerate of quartz pebbles bonded by a siliceous and ferruginous cement.	540 in 24.
108.	Meyer and Charlton Gold Mining Company, Limited.	Witwatersrand, South Africa.	Native gold and auriferous pyrite.	Hard conglomerate and quartz pebbles bonded by a siliceous and ferruginous cement.	360 in 24.
109.	Robinson Deep Gold Mining Company, Limited.	Witwatersrand, South Africa.	Native gold and auriferous pyrite.	Hard conglomerate of quartz pebbles bonded by a siliceous and ferruginous cement.	1423 in 24.
110.	Simmer Deep, Limited.	Witwatersrand, South Africa.	Native gold and auriferous pyrite.	Hard conglomerate of quartz pebbles bonded by a siliceous and ferruginous cement.	2400 in 24.

Mill No. (*a*)	Name.	Location.	Economic Minerals.	Gangue.	Capacity. Tons in Hours.
111.	Dredge of the Gold Bluff Mining Company.	Orick, California.	Native gold, platinum, mercury and magnetite, ilmenite, chromite, garnets, and zircon.	Quartz and pyroxene silicates.	1200 in 24.
112.	The Central Mill of the Twelve Apostles Mine.	Gurabárza, Transylvania, Hungary.	Native gold and auriferous sulphides.	Trachyte, porphyry, and greenstone.	465 in 24.
113.	Capital Mining and Tunnel Company.	Georgetown, Colorado.	Native gold, argentiferous chalcopyrite, galena, sphalerite, and pyrite.	Hard quartz and decomposed feldspar.	175 in 24.
114.	"The 60 Mill" of the Tomboy Gold Mines Company, Limited.	Telluride, Colorado.	Native gold and silver, argentiferous and auriferous galena, sphalerite, and pyrite.	Quartz.	300 in 24.
115.	El Potrerito Mill.	El Potrerito Camp, Chihuahua, Mexico.	Native gold and silver, argentite, pyragyrite, proustite, tetrahedrite, and pyrite.	Quartz.	20 (*d*) in 24.
116.	Concheño Mill.	Concheño Camp, Chihuahua, Mexico.	Native gold and silver, argentite, pyragyrite, proustite, tetrahedrite, and pyrite.	Quartz.	150 (*d*) in 24.
117.	Desert Power and Mill Company.	Millers, Nevada.	Gold, silver as sulphides and sulphantimonides, pyrite and chalcopyrite with traces of other minerals.	Quartz, sericite, andalusite, and calcite.	485 in 24.
118.	El Oro Mining and Railway Company, Limited.	El Oro, Estado de Mexico, Mexico.	Gold, silver, and pyrite.	Siliceous.	775 in 24.
119.	The Coniagas Mines, Limited.	St. Catharines, Ontario, Canada.	Smaltite, niccolite, and silver both native and as sulphides.	Calcite and slate conglomerate.	90 in 24.
120 (*f*).	Bunker Hill and Sullivan Mining and Concentrating Company.	Kellogg, Idaho.	Argentiferous galena, pyrite, chalcopyrite, and sphalerite.	Siderite and quartz.	3000 in 24.
121.	Mace Mill Number 1 of the Federal Mining and Smelting Company.	Wallace, Idaho.	Argentiferous galena, pyrite, and sphalerite.	Quartzite and quartz.	450 in 24.
122 (*g*).	Morning Mill of the Federal Mining and Smelting Company.	Mullan, Idaho.	Argentiferous galena, pyrite, and sphalerite.	Siderite and quartz.	300 in 24.
123.	Hecla Mining Company.	Burke, Idaho.	Argentiferous galena, pyrite, and sphalerite.	Quartz and basalt.	250 in 24.
124 (*h*).	Mill Number 3 of the Federal Lead Company.	Flat River, Missouri.	Argentiferous galena and pyrite.	Calcite and dolomite.	2600 in 24.
125 (*i*).	Smuggler Mining Company.	Aspen, Colorado.	Native silver, argentiferous galena, pyrite, argentiferous barite, sphalerite, and smithsonite.	Dolomite and quartz.	400 in 24.
126 (*j*).	Hoffman Mill of the St. Joseph Lead Company.	Leadwood, Missouri.	Galena and a little pyrite.	Limestone.	1200 in 24.
127.	St. Louis Smelting and Refining Company.	Desloge, Missouri.	Galena.	Dolomite.	1800 in 24.
128.	Block 10 Mine.	Broken Hill, New South Wales, Australia.	Argentiferous galena and sphalerite.	Rhodonite and rhodochrosite.	575 in 24.
129.	The Broken Hill Proprietary Mine.	Broken Hill, New South Wales, Australia.	Argentiferous galena and sphalerite with some carbonates.	Quartz and rhodonite.	1000 in 24.
130.	The Sulphide Corporation, Limited.	Central Mine, Broken Hill, New South Wales, Australia.	Argentiferous galena and sphalerite.	Rhodonite and quartz with some rhodochrosite.	700 in 24.
131.	Daly Judge Mining Company.	Park City, Utah.	Argentiferous galena, sphalerite, and pyrite.	Limestone and quartzite.	400 in 24.

Mill No. (*a*)	Name.	Location.	Economic Minerals.	Gangue.	Capacity. Tons in Hours.
132.	Daly-West Mining Company.	Park City, Utah.	Tetrahedrite, galena, sphalerite, and chalcopyrite with some carbonates.	Limestone and quartzite.	500 in 24.
133.	Ivanhoe Mill of the Minnesota Silver Company, Limited.	Sandon, British Columbia, Canada.	Argentiferous galena and sphalerite.	Slate and siderite (*c*).	150 in 24.
134.	Monitor Mill of the Monitor and Ajax Fraction, Limited.	Roseberry, British Columbia, Canada.	Argentiferous galena, and sphalerite.	Slate and Siderite (*c*).	100 in 24.
135.	Magnetic Plant at the Central Mine.	Central Mine, Broken Hill, New South Wales, Australia.	Argentiferous galena, sphalerite, and pyrite.	Rhodonite and quartz with some rhodochrosite.	240 in 24.
136 (*k*).	The Frisco Consolidated Mining Company.	Gem, Idaho.	Argentiferous galena, sphalerite, and magnetite.	Quartzite.	400 in 24.
137 (*l*).	Ferraris Calamine Mill.	Monteponi, Sardinia.	Calamine, smithsonite, limonite, galena, cerrusite, siderite, and sphalerite with small silver values.	Calcite, dolomite, and barite.	240 in 11.
138.	Velardeña Mining and Smelting Company.	Velardeña, Durango, Mexico.	Argentiferous galena, sphalerite, and pyrite.	Hard porphyry with a little limestone.	175 in 24.
139.	Minas Tecolotes y Anexas.	Santa Barbara, Chihuahua, Mexico.	Argentiferous and auriferous galena, sphalerite, and pyrite.	Quartz.	600 in 24.
140.	Colorado Zinc Company.	Denver, Colorado.	Argentiferous and auriferous galena, sphalerite, and pyrite.	Quartz.	75 in 24.
141.	Empire Zinc Company.	Canon City, Colorado.	Argentiferous and auriferous galena, sphalerite, and pyrite.	Quartz.	150 in 24.
142.	The Humphrey Mill of the Creede United Mines.	Creede, Colorado.	Argentiferous and auriferous galena, sphalerite, pyrite, and hematite.	Altered trachyte and quartz.	275 in 24.
143.	Gold Prince Mines.	Animas Forkes, Colorado.	Native gold, tetrahedrite and auriferous pyrite, sphalerite, galena, and chalcopyrite.	Quartz and rhodonite.	500 in 24.
144.	Silver Lake Mill of the Garfield Smelting Company.	Silverton, Colorado.	Argentiferous and auriferous galena, chalcopyrite, pyrite, and sphalerite.	Quartz and rhodochrosite.	350 in 24.
145.	Ore Dressing Plant of the Mines de Pierrefitte.	Pierrefitte, Nestalas, Hautes Pyrenees, France.	Galena and sphalerite.		150 in 24.
146.	Ore Dressing Plant of the Neue Helene Mine.	Hohenlohe Werke, Upper Silesia.	Sphalerite, galena, and pyrite.	Dolomite.	280 in 10.
147.	New Central Mill of the Atkien Company.	Vielle Montagne, Aachen, Prussia.	Sphalerite, pyrite, and galena.	Calcite and dolomite in a clayey shale.	110 in 10.
148.	Mills Mining and Reduction Company.	Hazel Green, Wisconsin.	Sphalerite, marcasite, and galena.	Limestone.	200 in 10.
149.	Adelaide Star Mines, Limited.	Golconda, Nevada.	Chalcopyrite, pyrite, sphalerite, and galena.	Hard quartz with spinel and garnet.	125 in 24.
150 (*m*).	New Central Ore Dressing Plant.	Clausthal, Germany.	Galena, sphalerite, chalcopyrite, and siderite.	Mica and argillaceous schists, calcite, fluospar, and quartz.	360 in 10.
151.	The Compania Minera Del Tiro General.	Charcas, San Luis Potosi, Mexico.	Pyrite, sphalerite, galena, and chalcopyrite as well as surface carbonates and oxides.	Siliceous limestone.	100 (*c*) in 24.
152 (*n*).	Number 2 Mill of the New Jersey Zinc Company.	Franklin Furnace, New Jersey.	Zincite, willemite, and franklinite besides a number of minerals of minor importance.	Calcite and biotite.	1200 in 24.
153.	Magnetic Separating Plant of the Krupp Mining Administration.	Kirchen on the Sieg, Germany.	Siderite and rhodochrosite.		20 in 10.

Mill No. (a)	Name.	Location.	Economic Minerals.	Gangue.	Capacity. Tons in Hours.
154.	Oliver Iron Mining Company.	Hibbing, Minnesota.	Hematite and limonite.	Taconyte.	1000 in 10(c).
155 (o).	Longdale Iron Company.	Longdale, Virginia.	Limonite of concretionary structure.	Clay and shale with sandstone and pebbles.	200 in 10.
156.	Cranberry Mill.	Cranberry, North Carolina.	Magnetite.	Hornblende, epidote, quartz, and feldspar.	350 in 10.
157 (p).	Concentrating Mill of the Wharton Steel Company.	Wharton, New Jersey.	Magnetite.	Granite.	360 in 24.
158 (q).	Witherbee, Sherman and Company, Inc.	Mineville, Essex County, New York.	Magnetite and apatite.	Gneiss, silica, feldspar, and hornblende.	1500 in 10.
159.	Lebanon Plant of the Pennsylvania Steel Company.	Lebanon, Pennsylvania.	Magnetite, chalcopyrite, and pyrite.	Limestone and sandstone slate.	975 in 24.
160.	Concentrator Number 2 of the Moctezuma Copper Company.	Nacozari, Sonora, Mexico.	Auriferous chalcopyrite, pyrite, and bornite.	Quartz.	2000 in 24.
161 (r).	Anaconda Copper Mining Company.	Anaconda, Montana.	Chalcocite, bornite, enargite, cupriferous pyrite, covellite, sphalerite, galena, and a little chalcopyrite.	Quartz and altered granite.	8800 in 24.
162 (s).	Boston and Montana Consolidated Copper and Silver Mining Company.	Great Falls, Montana.	Tetrahedrite, tennantite, and telluride, chalcocite, bornite, enargite, cupriferous pyrite, covellite, sphalerite, galena, and a little chalcopyrite.	Quartz and altered granite.	3000 in 24.
163.	Basin Reduction Company.	Basin, Montana.	Argentiferous and auriferous copper sulphides.	Granitic.	1000 in 24.
164 (t).	Butte Reduction Works.	Butte, Montana.	Argentiferous and auriferous chalcocite, bornite, chalcopyrite, pyrite, and sphalerite.	Quartz and decomposed feldspar.	500 in 24.
165.	Boston Consolidated Mining Company.	Garfield Beach, Utah.	Argentiferous and auriferous chalcopyrite, chalcocite, and bornite.	Porphyry.	3000 in 24.
166.	Cactus Mill of the Newhouse Mines and Smelter.	Newhouse, Utah.	Argentiferous and auriferous pyrite, chalcopyrite, and native copper.	Granite.	1000 in 24.
167.	Garfield Plant of the Utah Copper Company.	Garfield, Utah.	Argentiferous and auriferous chalcocite, bornite, and chalcopyrite.	Porphyry.	6000 in 24.
168.	The Caucasus Copper Company, Limited.	Dzansaul, Kutais, Russia.	Argentiferous and auriferous chalcopyrite.	Siliceous.	500 in 24.
169.	Giroux Consolidated Mines Company.	Ely, Nevada.	Argentiferous and auriferous chalcopyrite, chalcocite, and melaconite.	Monzonite and talcose-quartz.	800 in 24.
170.	Steptoe Valley Smelting and Mining Company.	McGill, Nevada.	Argentiferous and auriferous chalcocite, pyrite, chalcopyrite, melaconite, magnetite, and limonite.	Quartz — porphyry.	4000 in 24.
171.	Concentrator Number 6 of the Arizona Copper Company, Limited.	Morenci, Arizona.	Argentiferous and auriferous chalcocite.	Siliceous.	700 in 24.
172.	Detroit Copper Mining Company of Arizona.	Morenci, Arizona.	Chalcocite and other copper sulphides.	Siliceous.	1100 in 24.
173.	Concentrator Number 2 of the Cananea Consolidated Copper Company.	Cananea, Sonora, Mexico.	Argentiferous and auriferous chalcopyrite, chalcocite, pyrite, and native copper.	Siliceous and talcose.	2800 in 24.
174.	Old Dominion Copper Mining and Smelting Company.	Globe, Arizona.	Argentiferous and auriferous chalcocite, pyrite, and native copper.	Highly kaolinized and siliceous porphyry.	500 in 24.

Mill No. (*a*)	Name.	Location.	Economic Minerals.	Gangue.	Capacity. Tons in Hours.
175 (*u*).	Eustis Mining Company.	Eustis, Quebec, Canada.	Cupriferous pyrite.	Quartz, talcy-schist, and siliceous limestone.	200 (*d*) in 24.
176.	Pike Hill Mines, Incorporated.	Corinth, Vermont.	Chalcopyrite and pyrrhotite.	Siliceous.	40 in 24.
177 (*v*).	Calumet and Hecla Mining Company.	Calumet, Michigan.	Native copper and silver.	Rhyolite conglomerate with calcite, epidote, and martite.	10200 in 24.
178.	Baltic Mining Company.	Baltic, Michigan.	Native arsenical copper and melaconite.	Baltic amygdaloid.	2600 in 24.
179.	Champion Copper Company.	Painesdale, Michigan.	Native copper.	Baltic amygdaloid.	3900 in 24.
180.	The Trimountain Mining Company.	Trimountain, Michigan.	Native copper.	Baltic amygdaloid.	2100 in 24.
181 (*w*).	Osceola Consolidated Mining Company.	Opechee, Michigan.	Native copper.	Osceola amygdaloid, calcite, prehnite, and magnetite.	5250 in 24.
182 (*x*).	Quincy Mining Company.	Hancock, Michigan.	Native copper.	Pewabic amygdaloid.	4700 in 24.
183.	Arminius Mines.	Mineral, Louisa County, Virginia.	Cupriferous pyrite.	Slate.	250 in 10.
184.	Pyrite Dressing Plant of the Verein Chemischer Fabriken.	Morgensternwerk, near Mersdorf, Rohnau, Silesia.	Pyrite.		150 in 20.
185 (*y*).	Dressing Tin Ores at the Old Clitters Mine.	Gunnis Lake, East Cornwall, England.	Cassiterite, wolframite, pyrite, arsenopyrite, and chalcopyrite.	Quartzite, granites, etc.	100 (*d*) in 24.
186 (*z*).	General Practice of Asbestos Dressing.	Quebec, Canada.	Actinolite and chrysotile.	Hornblende and serpentine.	
187 (*).	Cinnabar Ore Dressing.	Idria, Austria.	Cinnabar.		
188 (†).	Diamond Washing.	South Africa.	Diamonds.	Porphyritic peridotite.	

(*a*) Mills 1 to 94 inclusive as well as a few others will be found described in Ore Dressing, Vol. II., Chapter XX. (*b*) See Ore Dressing, Vol. II., p. 1018. (*c*) Probably. (*d*) About. (*e*) See Ore Dressing, Vol. II., p. 1025. (*f*) See Ore Dressing, Vol. II., p. 937. (*g*) See Ore Dressing, Vol. II., p. 946. (*h*) See Ore Dressing, Vol. II., p. 920. (*i*) See Ore Dressing, Vol. II., pp. 933 and 1004. (*j*) See Ore Dressing, Vol. II., p. 924. (*k*) See Ore Dressing, Vol. II., p. 942. (*l*) See Ore Dressing, Vol. II., p. 1066. (*m*) See Ore Dressing, Vol. II., p. 965. (*n*) See Ore Dressing, Vol. II., p. 1060. (*o*) See Ore Dressing, Vol. II., p. 896. (*p*) See Ore Dressing, Vol. II., p. 1058. (*q*) See Ore Dressing, Vol. II., p. 1059. (*r*) See Ore Dressing, Vol. II., p. 984. (*s*) See Ore Dressing, Vol. II., p. 974. (*t*) See Ore Dressing, Vol. II., p. 987. (*u*) See Ore Dressing, Vol. II., p. 904. (*v*) See Ore Dressing, Vol. II., p. 990. (*w*) See Ore Dressing, Vol. II., p. 994. (*x*) See Ore Dressing, Vol. II., p. 998. (*y*) See Ore Dressing, Vol., II. p. 1081. (*z*) See Ore Dressing, Vol. II., p. 1079. (*) See Ore Dressing, Vol. II., p. 1074. (†) See Ore Dressing, Vol. II., p. 1080.

CHAPTER XLI.

SUMMARY OF PRINCIPLES AND OUTLINES OF MILLS.

§ 1416. SUMMARY OF PRINCIPLES. — The student will find the principles of separation given at some length in Ore Dressing, Vol. III., Chapter XXII. One new principle (electro-conductivity) has been applied with fair success and its application will be described later. For the convenience of the reader a list showing the methods of using these principles, as taken up in detail in Ore Dressing, Vol. II., pages 889 to 892, will be enumerated:

Hand picking.
Sizing by screens.
Sizing by a water film on a surface.
Sorting by free settling.
Elutriation.
Sorting by hindered settling.
Suction.
Sorting by settling in air.
Momentum and trajectory.
Agitation.
Greasy flotation.
Plate amalgamation.
The greased plate.
Electro-conductivity.
Magnetism.
Roasting for Magnetism.
Roasting for Porosity.
Decrepitation.
Centrifugal force.
Brittleness under crushing force.
Friability under a blow.

It is well, at this place, to say that *greasy flotation* or *the surface tension of a liquid*, as a method of separating values from waste, has advanced from a position of practical obscurity to one of considerable prominence. The principle is now being used successfully at a few mills, and with good results, on the galena-sphalerite ores of Broken Hill, New South Wales, Australia. The same principle is employed by Macquisten, in his method of separating the lead, zinc, iron, and copper sulphides at Golconda, Nevada.

Electro-conductivity. — Many minerals have been found to be capable of conducting electricity, some to a greater degree than others, while the waste rock or gangue is often a non-conductor. This principle of ore separation is made use of by several electrostatic separators, including the Blake, Huff, and Sutton, Steele, and Steele machines.

§ 1417. COMBINATIONS OF PRINCIPLES OF SEPARATION. — A few of the above principles of concentration, if used alone and unassociated with others, would give a commercially complete separation of the values from the gangue in given ores; but it may be stated that a majority of the principles would give little or no concentration unless two or more are used in combination. Several such combinations are given in Ore Dressing, Vol. II., p. 891, and the reader is referred to that place for them.

The combinations and orders of arrangement have become so numerous and varied that for the more modern practice the author refers the student to the mill schemes and outlines as given later in this chapter.

§ 1418. Theoretically the proper combination of principles should give a perfect separation with a given ore. Practice, however, seldom, if ever,

obtains such results, and the chief reasons for imperfect work are given below in the order of their importance:

a. Fine slimes.
b. Included grains.
c. Flattish grains.
d. Compact grains (if concentrator is run too fast).
e. Oxidized or weathered grains.

The actions of *a*, *b*, *c*, and *d* are described in Ore Dressing, Vol. II., page 892. Oxidized or weathered grains *e*, seem to affect the flotation and magnetic processes, in that a lower extraction is obtained when working over old waste dumps which have been exposed to the weather than when handling freshly made tailings of a similar nature.

Table 542 shows the general character of the ore and gangue, the average percentage extraction and the number of mills from which the general results are obtained in many districts and on various ores. A more detailed table will be found in the following chapter. These results have been obtained from a study of Mills 95 to 188 inclusive as given in this chapter.

TABLE 542. — SHOWING THE GENERAL CHARACTER OF THE ORE AND GANGUE AND THE AVERAGE PERCENTAGE EXTRACTION MADE IN VARIOUS DISTRICTS.

District.	Ore.	Gangue.	Average Percentage Extraction.	Number of Mills Results are Taken From.
California	Gold	Quartz and diabase	96.0 gold	1
Eastern	"	Siliceous	81.0 "	2
South Dakota	"	Quartz and mica schist or slate	95.0 "	1
California Dredge	"	Quartz	56.0 "	1
Witwatersrand, South Africa	"	Quartz, pebble conglomerate	94.1 "	3
Transylvania, Hungary	"	Trachyte, porphyry, and greenstone	84.0 "	1
Colorado	Gold and silver	Quartz	93.5 "	1
		Quartz and feldspar	85.0 gold and silver	1
Nevada	" " "	Quartz and silicified dacite	94.0 " " "	1
			89.6 gold	1
			90.5 silver	1
Mexico	" " "	Quartz	83.3 gold	2
			45.0 silver	1
Australia	" " "	Schist and quartz	91.5 gold and silver	1
Sumatra	" " "	Siliceous	71.0 gold	1
			50.0 silver	1
Colorado	Gold, silver, lead and copper	Quartz, limestone, and rhodonite	88.0 gold	1
			67.3 silver	2
			83.0 lead	2
			79.0 copper	1
			75.0 gold, silver and lead	1
Missouri	Silver and lead	Limestone	60.7 silver	1
			81.6 lead	2
Mexico	" " "	Porphyry and limestone	76.0 silver and lead	1
Utah	Silver, lead and zinc	Limestone and quartzite	62.7 silver	2
			77.4 lead	2
			56.0 zinc	2
Australia	Silver, lead and zinc	Quartz and rhodonite	62.3 silver	1
			72.1 lead	2
			72.4 zinc	1
Clausthal, Germany	Lead and zinc	Schist, quartz, and limestone	46.9 lead	1
			35.4 zinc	1
Pyrenees, France	" " "		74.3 lead	1
			74.7 zinc	1
Upper Silesia	Zinc	Dolomite	76.0 zinc	1
Prussia	"	Limestone	85.0 "	1
Germany	Iron and manganese		74.1 iron	1
			73.9 manganese	1
Minnesota	Iron	Taconyte	82.9 iron	1
New York	"	Gneiss and granite	92.9 "	3
Virginia	"	Sandstone, shale, and pebbles	88.0 "	1

TABLE 542. — (*Continued*).

District.	Ore.	Gangue.	Average Percentage Extraction.	Number of Mills Results are Taken From.
Pennsylvania	Iron and copper	Limestone and sandstone slate	94.3 iron 33.3 copper	1 1
Nevada	Gold, silver, and copper	Talcose-quartz	86.7 gold, silver and copper	1
Montana	Silver and copper	Granite	78.2 silver 80.5 copper	2 2
Lake Superior, Michigan	Copper	Amygdaloid	80.0 copper	1
Utah	"	Porphyry and granite	82.5 "	1
Vermont	"	Siliceous	66.7 "	1
Mexico and South Western United States	"	Talcose and siliceous porphyry	81.0 "	4
Silesia	Pyrite		85.0 pyrite	1
Cornwall, England	Tin and tungsten	Quartzose granite	89.1 tin and tungsten	1
South Africa	Diamonds	Porphyritic peridotite	98.0 diamonds	

Schemes of Mill Treatment.

§ 1419. So many changes have been made in concentrating methods since the appearance of the first two volumes of Ore Dressing, that it has been considered wise to place the outlines of a large number of mills, showing the most modern practice in concentration, in this chapter. With this end in view, ninety-four outlines of mill schemes follow. Some represent mills, given in Ore Dressing, Vol. II., Chapter XX., which have been remodeled and rearranged; and it is interesting to compare these with the older schemes. A number of completely new and modern mill outlines are also presented for the reader's study.

§ 1420. Methods of Study. — The outlines as presented in this chapter are so intricately involved with detail that the author will, at this point, give the key or method of analysis which he has found best adapted to simplify the study of the same. After getting the process in mind by use of the key, the student may then, with a great deal of profit, turn to the details of the schemes which contain so many good points that it is not deemed wise to omit them altogether.

The key or method of analyzing the mill schemes as used by the author is first to set all the screen sizes or classifiers in a column. Follow each with the concentrating machine to which the coarser size goes, and then in a third column give the products made by each concentrator. In a fourth column give the crusher to which the middlings go, and in the fifth the maximum size of grain to which each crusher is set to crush. In a final column set down the name of the concentrator to which the re-crushed products go. In order to make this method of study clear three outlines have been arbitrarily selected as examples of typical mills. In these keys the machine numbers used are the same as are used in the detailed outlines which will be found for comparative study under the mill numbers. After a study of these keys and their connection with the detailed flow sheets, further investigation of other schemes should be a comparatively easy task.

KEY TO THE OUTLINE OF MILL NO. 100.

Screens and Classifiers.	Concentrators.	Products.	Breaker or Crusher.	Limit of Crushing.	Destination.
(1) On 1.75 inches			(2) Blake	1.75 inches	(5)
			(5) Stamps	.0235 inch	(6)
	(6) Plates	Amalgam *			
		Pulp			(7)
	(7) Sand traps	Coarse sand			(11)
		Fine pulp			(8)
	(8) Quick traps	Amalgam			(11)
		Pulp			(14)
	(11) Clean-up pans	Pulp			(12)
	(12) Quick trap	Amalgam *			
		Coarse sand *			
	(14) Frue vanners	Concentrates *			
		Tailings			(16)
(16) Spitzkasten		Coarse	(17) Huntington mills	.0155 inch	(18)
		Fines			(23)
	(18) Plates	Amalgam *			
		Pulp			(21)
	(21) Frue vanners	Concentrates *			
		Tailings *			
	(23) Wilfley tables	Concentrates *			
		Tailings *			

* Indicates a finished product.

KEY TO THE OUTLINE OF MILL NO. 120.

Screens and Classifiers.	Concentrators.	Products.	Breaker or Crusher.	Limit of Crushing.	Destination.
(2) On 31.75 mm.			(3) Comets		(4)
	(4) Picking belt	Smelting Ore *			
		Milling Ore	(5) Rolls		(13)
(13) " 36.00 mm			(14) Rolls		(13)
		Hutches			(13)
(13) " 18.00 mm	(16) Jigs	Concentrates	(33) Huntington mill	1.8 mm	(35)
		Concentrates	(17) Rolls		(13)
		Tailings *			
		Hutches			(13)
(18) " 10.00 mm	(19) Jigs	Concentrates *			
		Concentrates	(22) Rolls		(13)
		Tailings *			
		Hutches			(13)
(20) " 7.00 mm	(21) Jigs	Concentrates *			
		Concentrates	(39) Huntington mill	1.5 mm	(67)
		Tailings *			
		Hutches			(13)
(20) " 3.00 mm	(23) Jigs	Concentrates *			
		Concentrates			(29)
		Tailings *			
		First spigots			(25)
(24) Through 3.00 mm		Second spigots			(26)
		Third spigots			(27)
		Fines			(40)
	(25), (26), and (27) jigs	Concentrates *			
		Middlings			(67)
		Tailings *			
(29) On 3.00 mm			(30) Huntington mills	1.5 mm	(29)
(29) Through 3.00 mm					(24)
		Concentrates *			
	(35) Wilfley tables	Middlings			(45)
		Slimes *			
		Tailings			(37)
		Middlings			(45)
	(37) Wilfley table	Concentrates *			
		Tailings			(67)
		Slimes *			
(40) Spitzkasten		Coarse			(41)
		Fines			(43)
		Concentrates			(45)
	(41) Wilfley table	Middlings			(67)
		Tailings *			
		Slimes			(63)
	(43) Vanners	Concentrates			(45)
		Tailings			(63)
		Concentrates *			
	(45) Wilfley tables	Tailings			(67)
		Slimes *			

* Indicates a finished product.

KEY TO THE OUTLINE OF MILL NO. 120. — (*Continued*).

Screens and Classifiers.	Concentrators.	Products.	Breaker or Crusher.	Limit of Crushing.	Destination.
.....	(63) Sand traps	Coarse	.....	.....	(65)
		Fines	.....	.....	(64)
.....	(64) Vanners	Concentrates *	.....	.....	.....
		Tailings *	.....	.....	.....
.....	(65) Wilfley tables	Concentrates *	.....	.....	.....
		Middlings	.....	.....	(84)
		Tailings *	.....	.....	.....
		Slimes	.....	.....	(63)
.....	(67) Slough-off tank ...	Coarse	.....	.....	(68)
		Fines	.....	.....	(63)
(68) On 0.54 mn	.....	.....	(69) Huntington mills ..	0.8 mm	(71)
(68) Through 0.54 mm .	(80) Wilfley tables	Concentrates *	.....	.....	.....
		Middlings	.....	.....	(84)
		Tailings *	.....	.....	.....
		Slimes	.....	.....	(63)
(72) On 0.58 mm	.....	.....	(69) Huntington mills ..	0.8 mm	(71)
(72) Through 0.58 mm .	(76) Wilfley tables	Concentrates *	.....	.....	.....
		Middlings	.....	.....	(84)
		Tailings *	.....	.....	.....
		Slimes	.....	.....	(63)
.....	(84) Wilfley tables	Concentrates *	.....	.....	.....
		Middlings	(69) Huntington mills ..	0.8 mm	(71)
		Tailings *	.....	.....	.....

* Indicates a finished product.

KEY TO THE OUTLINE OF MILL NO. 162.

Screens and Classifiers.	Concentrators.	Products.	Breaker or Crusher.	Limit of Crushing.	Destination.
(4) On 38.1 mm	(5) Picking Belts	Smelting Ore *	.....	.....	.....
		Milling ore ...	(6) Blake	38.1 mm ...	(7)
(7) " 38.1 mm	.....	.....	(8) Blakes	22.2 mm ...	(10)
(10) " 22.2 mm	(15) Harz jigs	Concentrates *	.....	.....	.....
		Middlings	.....	.....	(17)
		Tailings	(16) Rolls.....	8.0 mm ...	(10)
(11) " 8.0 mm	(17) Harz jigs	Concentrates *	.....	.....	.....
		Middlings	.....	.....	(21)
		Tailings	(20) Rolls.....	8.0 mm ...	(10)
(13) " 5.0 mm.....	(21) Evans Jigs.....	Concentrates *	.....	.....	.....
		Concentrates *	.....	.....	.....
		Tailings	(27) Rolls.....	2.5 mm ...	(26)
(14) " 2.5 mm	(22) Evans jigs	Concentrates *	.....	.....	.....
		Concentrates *	.....	.....	.....
		Tailings	(27) Rolls.....	2.5 mm ...	(26)
(26) " 2.5 mm	.....	.....	(27) Rolls.....	2.5 mm ...	(26)
(29) Through 2.5 mm ..	.....	Coarse	.....	.....	(30)
		Fines	.....	.....	(36)
		Slimes	.....	.....	(63)
(31) " 2.5 mm ..	.....	Coarse	.....	.....	(32)
		Fines	.....	.....	(59)
		Slimes.....	.....	.....	(63)
.....	(30) Evans jigs	Concentrates *	.....	.....	.....
		Middlings	(47) Huntington mills ..	1.25 mm ...	(50)and(52)
		Tailings *	.....	.....	.....
		Middlings ...	.....	.....	(36)
.....	(32) Evans jigs	Concentrates *	.....	.....	.....
		Middlings	(47) Huntington mills ..	1.25 mm ...	(50)and(52)
		Tailings *	.....	.....	.....
.....	(36) Wilfley tables	Concentrates *	.....	.....	.....
		Middlings	.....	.....	(38)
		Tailings *	.....	.....	.....
		Slimes	.....	.....	(63)
.....	(38) Frue vanner	Concentrates *	.....	.....	.....
		Tailings *	.....	.....	.....
(50) and (52) Through 1.25 mm	.....	Coarse	.....	.....	(51)and(53)
		Fines	.....	.....	(59)
(59) On 2.0 mm	.....	.....	.....	.....	(51)
(59) Through 2.0 mm ..	.....	.....	.....	.....	(36)
.....	(51) and (53) Evans jigs	Concentrates *	.....	.....	.....
		Middlings	(47) Huntington mills ..	1.25 mm ...	(50)and(52)
		Tailings *	.....	.....	.....
.....	(63) Evans tables	Concentrates *	.....	.....	.....
		Tailings *	.....	.....	.....

* Indicates a finished product.

ORDER OF MILLS.

§ 1421. ORDER OF MILLS. — The order in which the gold and silver mills are grouped is as follows:

A. WASHING FOLLOWED BY:
   1. HAND PICKING AND SIZING.
B. AMALGAMATION FOLLOWED BY:
   1. CONCENTRATION AND LIXIVIATION OF CONCENTRATES AND TAILINGS.
   2. CONCENTRATION AND LIXIVIATION OF CONCENTRATES.
   3. CONCENTRATION AND LIXIVIATION OF TAILINGS.
   4. LIXIVIATION AND CONCENTRATION.
   5. LIXIVIATION.
   6. CONCENTRATION.
C. CONCENTRATION FOLLOWED BY:
   1. LIXIVIATION.
D. LIXIVIATION.

The remainder of the mills are placed in groups determined by the more important values which they save, and in the following order:

E. MILLS SAVING ONLY SILVER VALUES.
F. MILLS SAVING SILVER AND LEAD VALUES.
G. MILLS SAVING ONLY LEAD VALUES.
H. MILLS SAVING SILVER, LEAD, AND ZINC VALUES.
I. MILLS SAVING GOLD, SILVER, LEAD, AND ZINC VALUES.
J. MILLS SAVING GOLD, SILVER, LEAD, AND COPPER VALUES.
K. MILLS SAVING LEAD AND ZINC VALUES.
L. MILLS SAVING LEAD, ZINC, AND IRON VALUES.
M. MILLS SAVING LEAD, ZINC, AND COPPER VALUES.
N. MILLS SAVING ZINC AND MANGANESE VALUES.
O. MILLS SAVING IRON AND MANGANESE VALUES.
P. MILLS SAVING ONLY IRON VALUES.
Q. MILLS SAVING IRON AND COPPER VALUES.
R. MILLS SAVING GOLD AND COPPER VALUES.
S. MILLS SAVING GOLD, SILVER, AND COPPER VALUES.
T. MILLS SAVING COPPER AND SULPHUR VALUES.
U. MILLS SAVING ONLY COPPER VALUES.
V. MILLS SAVING ONLY PYRITE.
W. MILLS SAVING TIN AND TUNGSTEN VALUES.
X. MILLS SAVING ONLY ASBESTOS.
Y. MILLS SAVING ONLY MERCURY VALUES.
Z. MILLS SAVING ONLY DIAMONDS.

A. 1. WASHING FOLLOWED BY HAND PICKING AND SIZING.

§ 1422. Mill No. 95 gives a general description of this method of concentration as generally employed.

In the Cripple Creek District of Colorado,[107] [138] the values are usually associated with soft material while the hard rock of the vein is almost destitute and washing is the usual method adopted to clean the values from the waste. Because of the fact that so much waste must be hoisted to get the values the cost of mining and treating varies from $3 to $15 and will average about $10 per ton shipped.

§ 1423. MILL NO. 95. ORE WASHING AT THE ELKTON MINE,[188] CRIPPLE

CREEK DISTRICT, COLORADO. — The ore, as hoisted, is trammed to the ore house and delivered to (1).

1. Trommel, 3 × 10 feet, with holes 1.125 inches in diameter punched in 0.25-inch sheet steel 2 inches between centers. A motor drives the trommel at 8 revolutions per minute. From the mine; delivers oversize to (3) and undersize to (2).
2. Bin. From (1), before the ore is washed; delivers to (4).
3. Bin. From (1); delivers to (5).
4. Elevator. From (2); delivers to (21).
5. Chute through which ore falls and is washed by a spray of water. From (3); delivers to (6).
6. Sorting table and shaking feeder, about 8 feet long. From (5). Waste is picked out and sent to (7) and the remainder is delivered to (8).
7. Cars. From (6); hoisted and delivered to dump.
8. Blake breaker. From (6); delivers crushed ore to (9).
9. Elevator. From (8); delivers to (10).
10. Crane washer, which is a circular revolving screen, 40 inches in diameter and 12 feet long, carried on rollers, and making from 8 to 12 revolutions per minute. The first third of the screen has 0.875-inch holes, the second third 1.125-inch holes, and the last third, 1.375-inch holes. All screens have round punched holes. From (9); delivers oversize to (12) and all undersizes to (11).
11. Bin. From (10); delivers, after sampling, to cyanide plant or smelter.
12. Washing drum which contains a revolving steel spiral screw, one-third submerged in a tank of water. The spiral has 0.375-inch holes near the discharge end for the delivery of water and slimes. From (10); delivers water and slimes to (13) and waste rock to (15).
13. Slimes tank. From (12); delivers settled slimes to (14) and overflow to waste.
14. Tank with means for drying the slimes. From (13); delivers, after sampling, to cyanide plant or smelter.
15. Picking belt conveyor. From (12); delivers hand-picked waste to (16) and remainder, up an incline, to (17).
16. Belt conveyor running parallel to (15). From (15); delivers waste rock, up an incline, to (17).
17. Hopper with partition. From (15) and (16); delivers ore, via chute, to (18), and waste rock, via cars, to dump.
18. Bins. From (17); deliver to (19).
19. Breaker breaking to 1-inch cubes. From (18); delivers to (20).
20. Elevator. From (19); delivers to (21).
21. Sampler. From (4) and (20) at different times; delivers reject to (22) and sample to assayer.
22. Chute. From (21); delivers to (23).
23. Loading bins. From (22); deliver, via cars, to cyanide plant or smelter.

This mill is doing very satisfactory work.

B. 1. AMALGAMATION FOLLOWED BY CONCENTRATION AND LIXIVIATION OF CONCENTRATES AND TAILINGS.

This method of saving gold values is exemplified by Mill 96.

§ 1424. MILL NO. 96. CENTRAL MILL OF THE NORTH STAR MINES COMPANY, GRASS VALLEY, CALIFORNIA. — The capacity of the mill [82] is 135 tons per 24 hours. The ore consists of the economic minerals, fine free gold and auriferous pyrite disseminated in a quartz gangue.[139] The country rock is diabase.

The ore is hand picked in the mine into clean waste and milling ore, both

of which are hoisted separately in skips holding 3 tons each. Waste rock goes to the dump and milling ore to (1).

1. Wooden bin with a capacity of 150 tons. From the mine; delivers to (2).

2. Electric train, made up of fourteen 2.5-ton cars. Two hours work per day with this train keeps the mill supplied with ore. The train hauls ore to other mills and also handles waste and concentrates. From (1); delivers to (3).

3. Grizzlies with 1.5-inch spaces between the bars which are of iron 0.875 inch wide on top, tapering to 0.625 inch on the bottom, 2 inches deep and 32 feet long. From (2); deliver oversize to (4) and undersize to (6).

4. Two masonry mill-bins, each having a capacity of 40 tons. From (3); deliver to (5).

5. Blake breaker, with a 9 by 15-inch jaw opening, making 300 thrusts per minute, having a capacity of 8 tons per hour and requiring 20 horse-power to operate. From (4); delivers crushed ore to (6).

6. Masonry mill bins, each having a capacity of 175 tons. From (3) and (5); deliver, via 8 gates and feeders, to (7).

7. Forty stamps, built by the Union Iron Works. They are arranged in eight 5-stamp batteries, weigh 1,050 pounds each, and drop 96 times per minute through a height of 8 inches. When chrome-steel shoes and dies are used they wear down about 0.083 inch per day. Cast-iron dies wear about 0.167 inch per day. Mortars rest on masonry foundations with rubber sheeting 0.03 inch thick between the two. Battery frames are of steel. The screens are made of very thin sheet steel, 10 × 50 inches, punched with 400 round holes per square inch, the holes being 0.025 inch in diameter. A space of solid metal is left around each square inch, which prevents breaking of the screen. The life of these screens is three times that of the ordinary variety and there is no blinding of the holes. Stem guides, bored 0.031 inch larger than the stems, have given fine satisfaction. The 40 stamps require a maximum of 96 horse-power to operate. From (6) and (12); deliver pulp to (8) and clean-up material to (12).

8. Eight silvered-copper amalgamation plates, 18 feet long by 4 feet wide and turned up 2 inches on either side to make them 44 inches wide. This bend in the plates is in the shape of a curve rather than a corner and thus allows for expansion without bulging. From (7); deliver amalgam to retort and pulp to (9).

9. Eight mercury traps. These are simply holes in the concrete floor. From (8); deliver amalgam and mercury to retort and pulp to (10).

10. Eight Dodd tables built by the Union Iron Works and having a capacity of about 20 tons per day each. From (9); deliver concentrates to cyanide plant, middlings to (11), and tailings to cyanide plant.

11. One Dodd table with details same as (10). From (10); delivers concentrates and tailings to cyanide plant. (10) and (11) require 8 horse-power.

12. Clean-up room containing an inclined bowl-shaped ball grinder, concrete clean-up tanks, and concrete settling tank. From (7); delivers amalgam to retort and coarse sands to (7).

The mill cost, including excavation expenses of $18,000, was $74,600.

The ore contains from 0.4 to 1.5 ounces gold per ton, averaging about 0.6 ounce. The gold is 876 parts fine. The concentrates, representing 2% of the weight and 8% of the values, assay 3 ounces gold per ton. The mill tailings represent 12% of the values and assay 0.01 ounce gold per ton. The tailings from the cyanide mill represent about 98% of the weight and 4% of the values and assay about 0.024 ounce gold per ton. Seventy-nine percent of the values in the ore are recovered by amalgamation, and of this 25% is saved in the batteries and 75% on the plates and in the traps.

The following table shows the cost of milling during 6 months in 1903:

	Jan.	Feb.	March.	April.	May.	June.	Average.
Cost per ton of ore milled exclusive of office expenses..... Wood costs $4.00 per cord	$0.53	$0.57	$0.70	$1.04	$0.76	$0.66	$0.71

The water supply for the mill is taken from the main water system, through a 26-inch Pelton wheel, with a 0.625-inch nozzle, which drives the rock breakers.

The water from the wheel is delivered to a masonry tank which supplies battery water, etc. The stamps are driven by a 75 horse-power induction motor located above the ore bins (6). The tables are driven by a 10 horse-power motor located on the concentration floor.

The mill runs three 8-hour shifts per day, 7 days in the week. The following labor is employed:

3 Amalgamators receiving	$100.00 per month.
3 Vanner men "	3.00 " day.
1 Rock-breaker man ".....	2.50 " day.
1 Foreman	125.00 " month.

§ 1425. MODERN PRACTICE IN CALIFORNIA GOLD MILLS. — The tendency now,[99] on the Pacific coast, is to increase the capacity by the use of a heavier stamp weighing from 1,000 to 1,200 pounds, with about 100 drops per minute and a low discharge. In many cases the capacity of these stamps has been increased by breaking to 0.25 inch before stamping the ore. The screens used in the mortars vary from 26 to 40 meshes to the inch with a general average of about 30. The size of the screens is determined more or less by the idea that when the gold occurs free, as in this district, the natural cleavage planes, where the rock breaks first, contain the gold, and the ore is discharged as near this size as possible.

After crushing, the pulp is passed over amalgamating plates with a slope of less than 2.5 inches to the foot and with as little water as possible. This brings the pulp into very intimate contact with the plates and insures better results. C. S. Hürter is of the opinion that the wave action, such as is produced by stamps, is everything in amalgamation, and arrived at this conclusion through the observation that the pulp, produced by a Huntington mill, while flowing evenly over the surface of a plate gave a very small saving; after which a narrow plate was arranged at the discharge which was struck by a tappet in such a way as to give it a sharp pulsating motion. This formed waves on the plate and the results obtained thereafter were excellent. The plates are kept as dry as consistent with good amalgamation. Cyanide is not used on the plates as it is possible, by this means, to make them so hard that mercury will not stick to them. Caustic potash or lye is used to clean stains, etc. Rubber scrapers are not extensively used now because they remove so much of the amalgam that there is not enough left on the plates to allow them to recover the proper amount of gold for a while after starting up. The method of cleaning, at present in use, is to use an ordinary straw bristle brush whenever cleaning is necessary. The fresh mercury is rubbed into the plates with the same brush and afterwards smoothed over with a whitewash brush.

The pulp from the plates passes through mercury traps having as many as six compartments. Mercury is placed in the bottoms of the first two compartments and a great deal of the gold is caught there.

The pulp from the mercury traps is sent to Wilfley tables which make concentrates, middlings, and tailings. The tailings are divided into coarse and fine tailings by means of a split in the tailings discharge from the tables. The

fine tailings go at once to waste, and the coarse tailings are sent to Johnston vanners which make concentrates and tailings. These tailings go to waste.

No classifiers are in use.

B. 2. AMALGAMATION FOLLOWED BY CONCENTRATION AND LIXIVIATION OF CONCENTRATES.

This group is illustrated by Mills 97, 98, and 99 which cover three districts.

§ 1426. MILL NO. 97. BOSTON-RICHARDSON MINING COMPANY, GOLDBORO, NOVA SCOTIA. — This mill has a capacity of about 175 tons per 24 hours.[13] The economic mineral is an auriferous arsenopyrite in a gangue of quartz and slate. The average gold value of the crude ore is $2.85 per ton. The problem is to save the gold and perhaps make a tailings product salable for its arsenic.

Rock House.

The ore comes from the mine in skips of 2 tons capacity and is delivered to (1).

1. Gates breaker, No. 5, style "K," breaking to 1.25 inches. From the skips; delivers crushed ore to (2).
2. Bucket elevator. From (1); delivers to (3).
3. Trommel with holes 1.25 inches in diameter. From (2); delivers oversize to (4) and undersize to (5).
4. Gates breaker, No. 4. From (3); delivers crushed ore to (5).
5. Bin. From (3) and (4); delivers, via car, to (6).

Concentrator.

6. Mill bins. From (5); deliver to (7).
7. Sixty stamps weighing 950 pounds each and making from 95 to 98, 7 to 7.5-inch, drops per minute. The height of discharge is 6 inches. They crush through an 18 × 24-mesh twilled screen of number 26 wire and each has a capacity of from 2.8 to 3 tons per 24 hours. Water is underfed at the back and mercury is fed to the mortars although there are no inside plates. The Koppel shoes and dies last about 6 months. From (6); deliver pulp to (8).
8. Twelve 12-foot silver-plated amalgamating plates, each being divided into three sections and having two 0.75-inch drops. Recover 73% of the gold value of the ore in the form of amalgam. From (7); deliver amalgam to retort and pulp to (9).
9. Six Wilfley tables. From (8); deliver from 2 to 3% of the crude ore, as concentrates, running from $15 to $30 per ton in gold, 25% in arsenic, and 30% in silica which is necessary for percolation, to (10), and from 98 to 97% of the crude ore, as tailings, assaying from 20 to 30 cents per ton in gold, and representing a loss of about 9% of the original gold value of the ore, to waste.
10. Shaking sluice. From (9); delivers to (11).
11. Draining tank. From (10); delivers pulp to (12) and drainings to waste.
12. Four treatment vats made of Nova Scotia pine, 12 feet in diameter and 18 inches deep. The capacity of each vat is 7 tons of ore which lies one foot deep in the vat. The length of treatment is 48 hours with a 0.15% cyanide solution of bromo-cyanide. The cost of the total bromo-cyanide treatment is $2.90 per ton of concentrates, including royalty, and the recovery is 79% of the gold value of the concentrates treated, or 14% of the gold value of the crude ore. The method is by percolation. From (11) and bromo-cyanide solution from (13); deliver filtrate to (14), and tailings, which run about $3 per ton in

gold and represent 4% of the gold value of the crude ore, to waste. It is proposed to send these tailings to (16).

13. Two storage tanks, 6 feet in diameter and 6 feet deep. Solution is always kept up to strength in these tanks by the addition of the required amount of strong fresh solution as needed. From (15); deliver to (12).

14. Four sump tanks, 6 feet in diameter and 6 feet deep. From (12); deliver to (15).

15. Two zinc boxes, 12 feet long. From (14); deliver solution, via pump, to (13) and precipitated gold to furnace and thence to bank.

16. Wilfley tables. From (12); deliver concentrates, running 40% in arsenic and about $6 per ton in gold, to market, and tailings to waste.

This re-treatment, as shown under (16), was tried in 1907 and a 100-ton trial shipment of arsenic concentrates was made which yielded $35.69 per ton. It is intended to carry on this treatment in the future as it adds about 50 cents a ton to the value of the crude ore. It is also proposed to install sixty new stamps of 1,500 pounds weight per stamp.

Water and Power.

The water supply is practically unlimited as it comes from a large lake. About 400 horse-power is required to run the whole plant. Water power is not available, but duplicate electric generators of 700 horse-power each are being installed which will be run by steam engines. The various machines in the mill will ultimately be driven by individual motors.

Labor and Wages.

The mill operates two shifts per 24 hours and requires 3 men on the day shift and 2 men on the night shift. Wages vary from $40 to $65 per month and the cost of milling, including operation and maintenance, is about 33 cents per ton.

§ 1427. MILL NO. 98. HAILE GOLD MINING COMPANY, HAILE GOLD MINE POST OFFICE, LANCASTER COUNTY, SOUTH CAROLINA. — The capacity of this mill is 150 tons per 24 hours.[178] The ore is siliceous and the economic mineral is gold which occurs free and in combination with iron sulphides. The problem is to save the gold. The ore is taken in equal quantities from the two mines, Beguelin and Cross.

At the Beguelin mine there is a Blake breaker with a jaw opening, 8 × 16 inches, making 275 thrusts per minute, and a bin of 50 tons capacity.

At the Cross mine there is a Blake breaker with a jaw opening, 8 × 16 inches, making 275 thrusts per minute, and a bin of 100 tons capacity.

The wearing parts of both breakers are made of manganese steel and have not yet worn out, although run continuously for 3 years and each handling from 60 to 100 tons of hard ore per 24 hours. The crushing at this point is performed very cheaply.

The ore from the two mine bins is trammed to (1) in 3-ton cars, drawn by a small locomotive.

1. Wooden mill-bin of 300 tons capacity so arranged that it can feed 30 stamps on either side. From the cars; delivers, via special distributing arrangements, to (2).

2. Sixty stamps arranged 30 stamps in a row on either side of the bin (1). The stamps weigh 750 pounds each and make 90 6-inch drops per minute. Height of discharge, 3 inches, and screens 35-mesh, 30-wire cloth. Capacity, 2.5 tons per stamp per 24 hours. There is no amalgamation inside the mortars. An average of about 16 gallons of water per minute per battery of 5 stamps

is required. Chrome-steel shoes and dies having a life of 6 months, cast-steel cams and tappets and cast-iron stamp heads are used. From (1); deliver pulp to (3).

3. Twelve amalgamation plates arranged in 4 steps, each 2 feet long, overlapping 1 inch and representing 32 square feet of surface. Slope 2 to 2.5 inches to the foot. The 4 plates are interchangeable; when the apron plate is sufficiently charged with amalgam it is removed, cleaned, and changed to the last sluicing plate, the others being moved up, thus giving each a chance as apron plate. The plates are made of silvered copper and a very weak cyanide solution is used to clean them. The gold recovered is 880 fine and the richer the crude ore the higher the extraction made here. From (2); deliver amalgam to retort and pulp to (4).

4. Riffled launders. From (3); deliver amalgam to retort and pulp to (5).

5. Seventeen Wilfley tables making 240 0.75 inch strokes per minute. The pulp contains between 4 and 8% sulphides and the concentrates average 1.5 ounces gold per ton and vary between 1 and 3 ounces. From (4); deliver concentrates to (6) and tailings to waste.

6. Roaster. From (5); delivers sulphur dioxide to atmosphere and roasted ore to (7).

7. One-ton lead-lined barrels. Concentrates treated with 10 pounds of bleaching powder and 20 pounds of acid per ton. From (6); deliver to (8).

8. Sand filters. From (7); deliver filtrate or gold solution to (9) and tailings to waste.

9. Precipitation tanks. Gold precipitated out of solution by the addition of ferrous sulphate. From (8); delivers gold to bank and solution to waste.

The mill feed assays between $2 and $4 per ton.

The Wilfley table tailings assay between $0.40 and $1 per ton.

The chlorination feed (roasted concentrates) assays from $25 to $60 per ton.

The chlorination tailings assay from $1 to $2 per ton.

The chlorination extraction is from 95 to 98% and the fineness of the gold is from 950 to 990. The chlorination process used is that known as the "Thies method."

The mill runs 24 hours per day, 6 days a week, and there are required to operate the entire mill, including foreman, engineer, concentrator man, and mill men, 6 men per shift of 12 hours. The wages vary from $1.25 to $3 per day.

The entire mill, including boiler, stamps, and concentrators, requires about 250 gallons of water per minute. The water comes from a pond about one-half a mile from the mill and enters the mill by gravity through a 10-inch square wooden flume and a wrought-iron pipe 8 inches in diameter.

§ 1428. MILL NO. 99. SELENIDE SILVER MILL, LEBONG-DONOK, SUMATRA. — The capacity of this mill is about 2,742 tons per month.[147] The ores contain considerable selenium and silver, a little iron, and about 80% of silica. One ore, treated in 1903, contained an average of 1.33 ounces of gold and 12.37 ounces of silver per ton; and an extraction of 71% of the gold and 50% of the silver was made. The total yearly extraction was valued at $714,560 which, minus a cost of treatment at $15.98 per ton, gives a net yearly profit of $190,008.

The crude ore goes first to (1).

1. Grizzly. From the mines; delivers oversize to (2) and undersize to (3).

2. Breaker. From (1); delivers crushed ore to (3).

3. Storage bin. From (1) and (2); delivers to (4).

4. Automatic feeder. From (3); delivers to (5).

5. Thirty-five stamps. From (4) and alkaline water from (15) and (19); deliver pulp to (6).

6. Amalgamated copper plates. From (5); deliver amalgam to retort and pulp to (7).

7. Spitzlutten. From (6), (10), and (11); delivers first spigot to (8), second spigot to (23), and overflow to (14).

8. Re-grinder for coarse sand. From (7); delivers to (9).

9. Spitzlutten. From (8); delivers first spigot to (10), second spigot to (11), and overflow to (14).

10. Double-deck round table. From (9); delivers concentrates to (12) and tailings to (7).

11. Round table. From (9); delivers concentrates to (12) and tailings to (7).

12. Muffle furnace. From (10) and (11); delivers roasted material to (13) and flue dust to (27).

13. Amalgamating pans. From (12); deliver amalgam to retort and tailings to (16).

14. Large spitzkasten. From (7) and (9); delivers spigots to (15) and overflow to (19).

15. Collecting tank. From (14); delivers pulp to (16) and clear alkaline water to (5).

16. Treatment tank. From (13), (15), (21), (24), and (26), aerated and cyanided; delivers to (17).

17. Decantation tank. From (16); delivers gold and silver-bearing solution to (18) and residue to (25).

18. Zinc-precipitate boxes. From (17); deliver zinc-precipitated metals to (20) and solution to (21).

19. Settling pond. From (14); delivers settled slimes to waste and clear alkaline water to (5).

20. Muffle furnace. From (18); delivers roasted material to (22) and flue dust to (27).

21. Tank. From (18); solution brought up to standard and delivered to (16), (23), and (26).

22. Melting furnace. From (20); delivers bullion to bank.

23. Special grinder. From (7), (24), and solution from (21); delivers pulp to (24).

24. Spitzlutten. From (23); delivers spigot to (23) and overflow to (16).

25. Launder. From (17); delivers material to be hand ground and cleaned, the concentrates going to (26) and tailings to waste.

26. Special grinder. From (25) and solution from (21); delivers to (16).

27. Selenium extraction plant. From (12) and (20).

B. 3. AMALGAMATION FOLLOWED BY CONCENTRATION AND LIXIVIATION OF TAILINGS.

Mills 100, 101, and 102 serve as examples of this group in two districts.

§ 1429. MILL NO. 100. MILL OF THE CAMP BIRD, LIMITED, OURAY, COLORADO. — This mill has a capacity of about 230 tons per 24 hours.[45] The ore treated consists in general of a white opaque quartz carrying values in gold, silver, and lead. The gold, forming 96% of the total values, occurs both in a free state in the quartz, and mechanically combined with metallic sulphides. The gold is very fine and it is rarely possible to see it in the ore. Its fineness is 720, the chief impurity being silver. Lead occurs as galena and this mineral carries the most of the silver values. Calcite occurs throughout the ore, but never in large quantities; rhodonite is abundant in certain portions of the mine. Among the metallic sulphides present, pyrite is the most common. Galena is present in sufficient quantities to make it of economic importance. Chal-

copyrite occurs sparingly, the percentage of copper in the ore being insignificant. Sphalerite occurs with all sulphides in a proportion somewhat in excess of galena. Magnetite occurs in exceedingly fine grains together with equally fine galena, the mixture producing indistinct cloudy bands throughout the quartz.

On the whole the ore may be considered ideal milling ore, yielding its values readily to amalgamation, concentration, and subsequent cyanide treatment of the tailings.

Ore comes from the mine to the mill over a Bleichert aerial wire-rope gravity tram. The length of the tramway is slightly over 9,000 feet and the vertical distance between the two terminal stations is 1,350 feet. Ore from the tram goes to (1).

1. Eight grizzlies, 4 × 11.33 feet, with 0.875-inch tapering bars, 1.75-inch spaces, and slopes of 45.0°. From tramway buckets; deliver oversize to (2) and undersize to (3).

2. Four Blake breakers with 9 by 15-inch jaw openings, breaking to 1.75 inches. Jaw plates are made of chrome steel, weigh 350 pounds when new, last 6 months, and weigh 150 pounds when changed. From (1); deliver crushed ore to (3).

3. Two wooden storage bins each 92.67 feet long, 19 feet wide, 18.75 feet deep in front, 5.33 feet deep in the back, and having bottoms sloping at 58°. Capacity of each 507 tons. From (1) and (2); deliver to (4).

4. Twelve Acme ore feeders. Suspended from tracks and capable of being moved away from the batteries when so desired. Positive feed. From (3); deliver to (5).

5. Twelve Allis-Chalmers 5-stamp batteries. The stamps weigh 1,050 pounds each, drop from 5.5 to 8 inches 100 times per minute in the order 1, 3, 5 2, 4, and have a discharge height of 4 inches. The capacity of each stamp is 3.875 tons dry weight per 24 hours, through 26-mesh, 29-wire cloth screens, each of which has a life of 72 hours. Each stamp requires 5 gallons of water per minute and 1.75 horse-power. Concrete piers are raised on solid rock, blasted out to grade, superimposed by 5-ton anvil blocks, which form the foundation for the mortars. Anchor bolts are set in the solid rock from 20 to 24 inches deep, extending through the piers into lugs cast on the anvil blocks for same. The mortars are bolted to the anvil blocks. There are 0.25-inch rubber gaskets under the base of both the anvil blocks and mortars. From (4) and water from (27) and (28); deliver pulp to (6).

6. Twelve amalgamating plates, silver-plated copper, 4.33 × 24 feet with slope of 1.75 inches to the foot. Plates are cleaned twice every 24 hours with ordinary amalgam rubbers, supplemented by a case knife where amalgam is hard, bringing the amalgam to the head of the plates. From (5); deliver pulp to (7) and amalgam to retort.

7. Twelve sand traps, 4.33 feet long by 6 inches wide, tapering to center and outlet, to which is attached a 2.5-inch pipe. From (6); deliver sand to (10) and pulp to (8).

8. Twelve cast-iron quicksilver traps, 2 feet in diameter and 18 inches deep, resting on a cast-iron base frame 17 inches high. The sides of the traps are 0.625 inch thick and the support iron is 2 inches thick. Each has 3 wooden mullers revolved by means of gears and pulleys to agitate the pulp. Mullers can be raised or lowered by a hand wheel on top and the traps can be emptied by removing a plug in the bottom. From (7); deliver quicksilver to (9) and pulp to (14).

9. Twelve quicksilver-trap boxes, 30 inches long by 16 by 14 inches. From (8); deliver quicksilver to (11).

10. Sand bin, 4 feet long by 30 × 30 inches. From (7); delivers to (11).

11. Two Allis-Chalmers 36-inch clean-up pans. Charges 100 pounds, additions every 6 hours, withdrawals previous to each charge, quicksilver added as necessary, and amalgam recovered once a week. From (9) and (10) and water from (27); deliver to (12).

12. Quicksilver trap, 2 feet in diameter. From (11); delivers sand to (13) and, after the amalgam is removed, the quicksilver is ready for use again in the batteries or on the plates.

13. V-shaped settling tank, 12 feet long by 7 feet wide on top and 10 inches on the base, by 6 feet deep. From (12); delivers settled sands to (24) and overflow to (25).

14. Twenty-four 6-foot Frue vanners with smooth belts traveling 40 inches per minute and making 186 1-inch throws per minute. Have slopes of 4.5 inches for coarse material and 3.5 inches for fine material. Each vanner requires from 2 to 3 gallons of water per minute. From (8) and water from (27); deliver concentrates to (24) and tailings, via launder, to (15).

15. Four elevators with riveted steel buckets, 6 × 8 × 14 inches, bolted onto rubber belts, 18 inches apart. Speed of belts 400 feet per minute. From (14); deliver to (16).

16. Spitzkasten, 28.75 feet long, 6 feet wide at the top and 1 foot at the base, by 6.167 feet deep. From (15) and (27); delivers spigot of coarse material to (17) and overflow to (22).

17. Five 5-foot Huntington mills crushing through wire-cloth screens having 35 to 40 meshes to the inch and a life of about 72 hours. From (16) and water from (27) and (28); deliver pulp to (18).

18. Ten amalgamated copper plates, 4 × 16 feet. From (17); deliver amalgam to retort and pulp to (19).

19. Two elevators. From (18); deliver to (20).

20. Dewatering box, 10.417 feet long, 6.167 feet wide at the top and 10 inches wide at the base, by 6.083 feet deep. From (19); delivers spigot to (21) and overflow, via tailrace, to cyanide plant.

21. Six 6-foot Frue vanners with smooth belts traveling 36 inches per minute and making 182 1-inch throws per minute. Have a slope of 3.25 inches. Each vanner requires from 2 to 3 gallons of water per minute. From (20) and water from (27); deliver concentrates to (24) and tailings, via launder, to cyanide plant.

22. Spitzkasten. From (16) and (27); delivers spigot to (23) and overflow, via tailings race, to cyanide plant.

23. Ten No. 5 Wilfley tables making 240 throws per minute, each from 0.525 to 0.875 inch in length with an average of 0.75 inch. Each table requires from 2 to 3 gallons of water per minute and 0.75 horse-power. From (22) and water from (27); deliver concentrates to (24) and tailings, via launder, to cyanide plant.

24. Drier bin. Bin with 2-inch steam pipe system in it which dries the moisture out of the concentrates down to 5%. From (13), (14), (21), (23), (25), and (31); delivers concentrates, via cars, to smelter.

25. Four settling boxes to receive drainage from floors and (13). The boxes are situated in the aisles between the rows of concentrators and are 3 feet wide by 2 feet deep, and extend the full length of the concentrating department. Deliver settlings to (24) and overflow water to waste.

26. Water tank with a capacity of 50,000 gallons for use in case of fire. From dam; delivers overflow to (27).

27. Clear-water tank with a capacity of 12,000 gallons. From (26); delivers, via four separate 4-inch mains, to (5), (11), (16), (22), (29), and to cyanide mill; also, for sluicing purposes, to (14), (17), (21), and (23).

28. Dirty-water tank with a capacity of 12,000 gallons. From pump main of cyanide plant; delivers water, free of cyanide, to (5) and (17).

29. Tank with a capacity of 50 gallons. From (27) and (33); delivers to (30).

30. Triplex pump, 3 × 3 inches. From (29); delivers to (31).

31. Water-tube boilers. From (30); deliver to (24) and (32).

32. Coils which heat the mill and (24). From (31); deliver to (33).

33. Vacuum pump. From (32); delivers to (29).

Three 8-hour shifts are employed 7 days in the week on the San Juan wage schedule.

The saving effected, including that by cyanidation, during the past 5 years averages a little better than 93.5% of the assay gold value of the ore, which is nearly 96% of the total values.

The concentrates vary in gold from 1.75 to 4.5 ounces per ton, in silver from 9 to 17 ounces per ton, and in lead from 10 to 17%. They carry a very small percentage of copper and the average analysis approximates:

SiO_2, 20%; Fe, 16%; and Zn, 15%.

§ 1430. MILL No. 101. COMBINATION MILL OF THE GOLDFIELD CONSOLIDATED MINES COMPANY, GOLDFIELD, NEVADA.[22] [124] — The mill has an approximate capacity of 100 tons per 24 hours.[108] The ores treated are mixed sulphides and oxides from the lower and upper workings, and no effort is made to keep them separate. The gangue is a silicified dacite, or altered country rock, there being no visible demarcation of vein matter. Both the fine gold and the sulphides are very finely desseminated throughout the gangue, and but a small portion of the values are freed until all is ground sufficiently fine to pass a 150-mesh screen. The problem is to save the economic minerals, gold and silver.

The ore goes from the bins to (1).[42] [108]

1. Twenty gravity stamps, each weighing about 1,200 pounds when new and making 110 6-inch drops per minute. The mortar box is 11 inches wide by 54 inches long, inside dimensions at the bottom, and 13 inches wide by 54 inches long at the discharge. The bottom is 6 inches thick and has a false die 2 inches thick. The stems are 3.625 inches in diameter and 12 feet long. Pachuca cams are used which have a radius of 15 inches, a bore of 5 inches, and a hub width of 5.5 inches. The heads are 9.5 inches in diameter and 24 inches long. The ore is crushed through 16-mesh, 22-wire Tyler double-crimped screens. From the bins; deliver pulp to (2).

2. Four amalgamating plates divided into three sections, each 3.33 feet long by 4.5 feet wide, sloping 1.75 inches to the foot. Cleaned up every day by moistening with quicksilver, scraping off the amalgam with a steel amalgam-knife, scouring with a fine-grained common red brick to loosen the crystalline amalgam, and finishing with a whisk broom. The plates are dressed twice on each shift by adding the necessary mercury and brushing with a whisk broom. Thirty-two percent of the values are extracted here. From (1); deliver amalgam to retort and pulp to (3).

3. Three-inch Krogh centrifugal pumps having speeds of 650 revolutions per minute and lifts of 20 feet. The casings and impellers have a life of 10 to 12 months. From (2); deliver pulp to (4).

4. One 4-foot cone classifier having a rising current of 7 feet per minute. From (3) and (6); delivers spigot to (5) and overflow to (7).

5. Two Abbé tube mills, one 4 feet in diameter and 12 feet long with a capacity of 25 tons per 24 hours, and the other 4 feet in diameter and 16 feet long with a capacity of 30 tons per 24 hours. Each is lined with silex brick, consumes 1.25 pounds of pebbles per ton of ore, and makes 26.3 revolutions per minute. From (4); deliver pulp to (6).

6. One 3-inch Krogh centrifugal pump with details as in (3). From (5); delivers to (4).

7. Six amalgamating plates divided into six sections each 2 feet long by 4.5 feet wide, sloping 2 inches to the foot. From (4); deliver amalgam to retort and pulp to (8).

8. Pointed box classifiers. From (7); deliver coarser spigots to (9) and finer spigots to (12). There is no overflow.

9. Pointed box classifier. From (8); delivers spigots to (10) and overflow to (11).

10. Four Frue vanners, 6 feet wide, making 185 1-inch throws per minute. From (9); deliver concentrates to (31) and tailings to (24).

11. Three vanners, one Frue with details as in (10) and two Triumph vanners, 5 feet wide, making 210 0.875-inch throws per minute. From (9); deliver concentrates to (31) and tailings to (24).

12. Twenty-four canvas tables, 12 × 12 feet, having average slope of 1.375 inches to the foot. Each table has a capacity of 1.5 tons per 24 hours. From (8); deliver concentrates to (13) and tailings to (17).

13. Two rectangular pointed boxes, arranged in series, the overflow of the first running into the second. The first is used as a combination classifier and pulp thickener, and the second as a settler only: the effort being to settle as much of the solids as possible. From (12); the first box delivers its spigot, via a 0.25-inch hole in an iron plug, to (14), and the second box delivers its spigot to (16) and the overflow to (17).

14. One Triumph vanner, 5 feet wide, making 200 0.75-inch throws per minute. From (13); delivers concentrates to (15) and tailings to (17).

15. One Triumph vanner with details as in (14). From (14); delivers concentrates to (31) and tailings to (17).

16. One Triumph vanner, 5 feet wide, making 212 0.625-inch throws per minute. From (13); delivers concentrates to (31) and tailings to (17).

17. Two 3-inch Krogh pumps with details as in (3). From (12), (13), (14), (15), and (16); deliver to (18).

18. Six slimes settlers, four 12 feet in diameter and 6 feet deep, and two, 16 feet in diameter and 8 feet deep. From (17); deliver thickened pulp, having a specific gravity of 1.3, to (19) and the clear water overflows to the mill system again.

19. Three wooden agitators, two 10 × 14 feet and one 12 × 18 feet, with conical bottoms. Each has a vertical shaft in the center to which are attached 4 arms making 9 revolutions per minute. Attached to each agitator is a pump (20) which returns the pulp over and over again.

This agitation is kept up from 12 to 24 hours. The solution has a consistency of 2 tons of solution to 1 of dry slimes. Its strength is 1 pound of KCN per ton of water. From (18) and (20); deliver to (20).

20. Three 3-inch Krogh centrifugal pumps with details as in (3). From (19); deliver either to (19) or (21).

21. Two slimes storage tanks, 16 feet in diameter and 14 feet deep. From (20); deliver, periodically, to (22).

22. Two Butter's filter boxes,[7] one 10.5 feet wide by 11.5 feet long by 12 deep and the other 10.5 feet wide by 12 feet long by 12 feet deep, containing 28 and 30 filters respectively, each filter being 5 feet deep by 10 feet long. After filtering, the slimes cake is washed on the filters. Then water is run into the inside of the filter and the slimes cake drops to the bottom of the box, in which an 8-inch gate is opened to allow the pulp to go to waste. It requires 3.75 hours to complete each cycle, that is, to form cake, change pulp for water, wash, and discharge. From (21); deliver the effluent solution to (23) and pulp to waste.

23. Smith-Vaile filter press for clarifying solutions. It contains fifty 32-inch plates and 1.5-inch distance frames. From (22); delivers clean gold-bearing solution to (26).

24. Eight sand-collecting tanks, 4.5 feet deep by 16 feet in diameter. Pulp is treated for 4 days with a 0.04 % solution or 0.8 pound KCN per ton of water. During this time the pulp has a consistency of 2 tons of solution to 1 of sands and each tank has a capacity of about 41 tons of sand. From (10) and (11); deliver filtrate to (26) and pulp, via shovels, to (25).

25. Eight sand tanks below and with details as in (24). Pulp is treated for 4 days with a 0.1% solution or 2 pounds KCN per ton of water. During this time the pulp has a consistency of 2.5 tons of solution to 1 of sand. After filtering, the pulp is again treated with a weak solution, as in (24), for 3 or 4 days, followed by washing for 14 hours. From (24); deliver all filtrates and gold-bearing solutions to (26) and pulp, sluiced to waste.

26. Three gold-solution storage tanks. From (23), (24), and (25); deliver to (27).

27. Four zinc-precipitating boxes. (27) and (28) use 0.27 pound of zinc shavings per ton of solution and 2.58 pounds of zinc shavings per ounce of fine gold. From (26); deliver precipitates to (29) and solution to (28) or (30).

28. Four zinc-precipitating boxes with details as in (27). From (27); deliver precipitates to (29) and solution to waste.

29. Clean-up room. From (27) and (28). The precipitates are cleaned up once each month by giving a sulphuric acid treatment. They are then dried, and melted down in a Faber du Four furnace and the bullion shipped to the mint.

30. Four sump tanks. From (27); deliver to system again.

31. Concentrates bin. From (10), (11), (15), and (16); delivers to smelter.

All tanks and pulp receptacles are of redwood.

Originally Wilfley slimers treated the re-ground material from (5). These proved mechanically unsatisfactory and the amalgamating and canvas tables were substituted.

The crude ore varies considerably in value. In March, 1908, it ran $35 per ton, and in April, $27.60. The tailings for these 2 months ran $2.33 and $1.304 respectively. The concentrates vary from $160 to $600 per ton. Following are analyses of the concentrates made from Mohawk and Combination sulphide ores on the vanners and canvas tables:

	Vanner.	Canvas Plant.
Insoluble	18.30 percent.	16.55 percent.
Sulphur	41.50 "	42.69 "
Iron	35.90 "	37.22 "
Copper	.64 "	.60 "
Lead	None	Trace
Tellurium and selenium	.25 "	.27 "
Bismuth	.12 "	.27 "
Zinc	.19 "	.17 "
Manganese	.04 "	.03 "
Lime	Trace	Trace
Magnesium	Trace	Trace
Alumina	2.68 "	1.67 "
Gold	.04 "	.05 "
Silver	.018 "	.015 "
Arsenic	Trace	Trace
Antimony	.10 "	.08 "

This mill runs three 8-hour shifts per day, 7 days per week. A total of 35 men are employed around the mill, including the foremen.

The following wages are paid:

Batterymen	$4.50	per	day	of	8 hours.
Amalgamators	4.50	"	"	"	"
Concentrator men	4.00	"	"	"	"
Solution men	4.50	"	"	"	"
Canvas plant men	4.00	"	"	"	"
Filter men	4.00	"	"	"	"
Crusher men	3.75	"	"	"	"
Sand shovelers	3.75	"	"	"	"
Common labor	3.50	"	"	"	"

Electric power is used to operate the mill to the amount of 190 horse-power.

§ 1431. MILL NO. 102. CUSTOM SAMPLER AND MILL OF THE NEVADA GOLDFIELD REDUCTION COMPANY, GOLDFIELD, NEVADA.[124] — The sampler has a capacity of 500 tons per 24 hours and the mill a capacity of 100 tons.[117] The ores treated vary in character and value considerably. The entire milling ore is ground to pass a 100-mesh screen and from 20 to 30% of the coarser material is separated and treated in leaching tanks while the slimes are treated by vacuum filters. The problem is to save the economic minerals, gold and silver. Ore is delivered, via rail and wagon, to (1).

Sampling Plant.

1. Two lines of receiving bins of 800 tons capacity. One line on each side of the ground floor. One side for cars and the other for wagons. From the mines; deliver to (2).

2. McCully gyratory rock breaker, No. 4. From (1); delivers crushed rock to (3).

3. Vertical belt elevator with a capacity of 50 tons per hour, and elevating the ore 93 feet. From (2); delivers to (4).

4. Vezin sampler. From (3); delivers sample to (5) and reject to (12).

5. F. M. Davis rolls, 14 × 30 inches. From (4); deliver crushed ore to (6).

6. Elevator, 72 feet long. From (5); delivers to (7).

7. Vezin sampler. From (6); delivers sample to (8) and reject to (12).

8. Hendrie-Bolthoff Manufacturing Company coarse rolls, 8-inch face. From (7); deliver crushed sample to a floor where it is quartered twice. The sample is sent to (9) and the reject to (12).

9. Fine rolls in the sample room. From (8); deliver crushed sample to a floor where it is quartered twice. The sample is sent to (10) and reject to (12).

10. Gyratory Grinder. From (9); delivers crushed sample to a floor where it is quartered to 2 pounds. The sample is sent to (11) and reject to (12).

11. Disc pulverizer and bucking board where the sample is reduced to 100 mesh. From (10); delivers pulp, as a control sample, to assayer.

12. Robins belt conveyor, 20 feet long. From (4), (7), (8), (9), and (10); delivers to (13).

13. Bifurcated chute. From (12); delivers to (14) and (15).

14. Six storage bins for milling ore. Each holds 70 tons. From (13); delivers to (16).

15. Eighteen-inch Robins belt conveyor, 115 feet long. From (13); delivers to (17).

16. Feed gates. From (14); deliver to (18).

17. Twenty storage bins for shipping ore. Each holds 45 tons. From (15); deliver, via gates, to cars and thence to smelter.

Concentrating Mill.

18. Four Challenge suspended feeders. From (16); deliver to (19).

19. Twenty stamps each weighing 1,250 pounds and stamping, with a dilute cyanide solution, in an M. P. Boss battery. From (18) and solution from (44); deliver amalgam to the refinery building and pulp to (20).

20. Four amalgamating plates. From (19); deliver amalgam to refinery building and pulp to (21).

21. Eight Wilfley tables. From (20); deliver concentrates to (22), coarser tailings to (23), and finer tailings and slimes to (24).

22. Concentrates bin. From (21); delivers concentrates, via cars, to smelter.

23. Allis-Chalmers tube mill, 5 × 22 feet. From (21) and (29); delivers pulp to (24).

24. Two amalgamating plates. From (21) and (23); deliver amalgam to the refinery building and pulp to (25).

25. Three 54-inch Frenier spiral sand-pumps with a 20-foot lift. From (24); deliver to (26).

26. Three 54-inch Frenier spiral sand-pumps with a 20-foot lift. From (25); deliver to (27).

27. Six wooden Spitzlutten, each 2 × 2 feet with the sides sloping at 30° angles and wedge-shaped. From (26); deliver spigots to (28) and overflows to (30).

28. Sizing Spitzkasten with 4 spigots. From (27); deliver the first spigots to (29) and the remainder to (30).

29. Wilfley table. From (28); delivers concentrates, via sacks, to smelter and tailings to (23).

30. Eight Frue vanners. From (27) and (28); deliver concentrates, via sacks, to smelter, tailings to (31), and slimes to (32).

31. Leaching plant composed of eight tanks, 22 feet in diameter and 5 feet deep. The upper four tanks are used for collecting and treatment while the lower four are used for double treatment. From (30); delivers solution to (38) and tailings to dump.

32. Collecting tank for slimes, 24 feet in diameter by 16 feet deep. From (30); delivers pulp to (33) and overflow to (45).

33. Three agitating tanks, 24 feet in diameter and 16 feet deep. From (32); deliver to (34).

34. Storage tank for filters, 20 feet in diameter and 22 feet deep. From (33) and (36); delivers to (35).

35. Three Butters vacuum-filter boxes with 16 leaves each. From (34), (36), and (42); deliver filtrates to (37) and the residues to waste, or occasionally to (36).

36. Auxiliary agitating plant with twelve tanks, 8 feet in diameter and 12 feet deep. Agitate with a steering gear and a 4-inch centrifugal pump. From (35) and (46); delivers to (34) and (35).

37. Gold-solution storage tanks. From (35) via vacuum pumps; deliver to (38).

38. One 5-ton American filter press. Remodeled by E. S. Leaver for clarifying solutions. From (31) and (37); delivers clear solution to (39), slimes and residue to waste.

39. Zinc-precipitation boxes. From (38); deliver gold and silver precipitates to (40) and barren solutions to (42) and (43).

40. Acid-refining tank, 6 feet in diameter and 8 feet deep. From (39); delivers to (41).

41. Small Davis filter press. From (40); delivers the precipitate cake to the refinery building for drying, fluxing, and melting.

42. Weak barren-solution sump tank, 24 feet in diameter and 6 feet deep. From (39); delivers to (35) for washing purposes and to (44).

43. Strong barren-solution sump tank. From (39); delivers to (44).

44. Battery-solution tank. From (42), (43), and (46); delivers, via gravity, to (19).

45. Decanted-solution tank. From (32) and (46); delivers, via pump, to (46).

46. Large rectangular settling tank with a wedge-shaped bottom, 10 × 45 × 15 feet deep. From (45); delivers spigot to (36) and overflow to (44) and (45).

Costs of operating are very high, due to the high cost of power, water, and labor.

B. 4. AMALGAMATION FOLLOWED BY LIXIVIATION AND CONCENTRATION.

Exemplified by Mill 103 covering Colorado practice.

§ 1432. MILL NO. 103. LIBERTY BELL GOLD MINING COMPANY, TELLURIDE, COLORADO. — The ore treated consists of gold and silver partly free and partly combined with sulphides, disseminated throughout a quartz-calcite gangue.[37 146] In many of the stopes the vein filling is wholly calcite, in some wholly quartz, and in others the two are mixed in bands of varying thickness. Much of the ore consists of attrition breccia, the voids being filled with calcite and quartz. Again, some of the ore consists wholly of triturated country rock, in which the mineralizing solutions have deposited gold and silver without any cementing calcite or quartz. The value of this latter ore can only be determined by assay, and the results of such assays decide which is and which is not ore. The general practice is to take all the vein filling and send it to the mill, as the values have been deposited in such an erratic and spotty way that stope assays prove unreliable. For example, it has been found that stopes which average only two or three dollars per ton upon sampling yielded a fair profit when the ore was sent through the mill. The value of the ore milled varies, but generally lies between eight and twelve dollars per ton.

The mill handles an average of 350 tons of ore per 24 hours, but this amount can be varied, at will, from 300 to 400 tons by changing the size of the screens used in the batteries.

At the mine the ore is run over 4 grizzlies, approximately 10 × 12 feet, arranged two in a series. The first grizzly has 3-inch spaces, and the second 10-inch spaces, between bars. The fine ore through the first grizzly goes, via aerial tram, to (4), while rocks larger than 10 inches are broken by hand hammers and go with the undersize of the coarse grizzly, via aerial trams, to (1).

Mill.[92 179]

1. Grizzly, 3 × 3 feet, bars 3 feet long, 1 inch thick, and 2 inches deep placed 3 inches apart, slope 45°. From the mine; delivers oversize to (2) and undersize to (3).

2. Blake breaker with a jaw opening 9 × 15 inches, making 50 thrusts per minute and set to break to 3-inch cubes. From (1); delivers to (3).

3. Belt conveyor. Carriage furnished by the Jeffrey Manufacturing Company; and belt, by the Boston Belting Company. The belt is 22 inches wide, 6 ply, travels 229 feet per minute, and has a life of 6 months. From (1) and (2); distributes ore to (4).

4. Wooden ore-bin, 133 feet long by 22 feet wide, with bottom sloping at 45° and having a capacity of 1,500 tons. From (3) and mine; delivers ore, via 16 Challenge ore feeders, to (5).

5. Eighty gravity stamps arranged in 16 5-stamp batteries. The stamps weigh 850 pounds and drop through a distance of 7 inches, 100 times per minute. The height of discharge is from 2 to 4 inches. 4.4 tons of ore per stamp are crushed, per 24 hours, through steel wire screens having 16 meshes to the inch and of number 23 wire. Screens last 10 days. Shoes wear 5 months; and dies, 2 months. No quicksilver is used in the batteries. From (4) and (15); deliver pulp to (6).

6. Sixteen copper amalgamating-plates. From (5); deliver pulp to (7) and amalgam to retort and thence to mint. Plates are 8 feet long and 4 feet 8 inches wide.

7. Twelve cast-iron mercury traps with one fixed and two movable partitions. From (6); deliver overflows to (8) and amalgam to retort and thence to mint.

8. Two Dorr sizers and one cone classifier. The sizers are 8.5 × 2.67 feet. From (7); deliver spigots to (9) and overflows to (10).

9. Three tube mills. Shells are 22 feet long by 5 feet in diameter. They make 25 revolutions per minute, and have a capacity of 90 to 100 tons per 24 hours. They consume 1.6 pounds of pebbles per ton of material crushed. Linings are of silex brick, 4 inches thick, and last 18 months. Only two mills are used at one time, the third being held in reserve. From (8) and (13); deliver pulp to (10).

10. Twelve copper amalgamating-plates. From (8) and (9); deliver pulp to (11) and amalgam to retort and thence to mint. Plates are 8 feet long by 4 feet 10 inches wide.

11. Twelve cast-iron mercury traps with details same as (7). From (10); deliver overflows to (12) and amalgam to retort and thence to mint.

12. Two 6-foot steel-cone settling tanks of the Callow type. From (11); deliver spigots to (13) and overflows to (14).

13. Elevator with 6-ply belt, 60 feet long and 10 inches wide. The belt has a speed of 450 feet per minute and a life of about 6 months. Buckets are 6.75 × 4.25 inches, spaced 12.75 inches between centers and have a life of about 18 months. From (12); delivers pulp to (9).

14. Five redwood settling-tanks, 33 feet in diameter and 9.5 feet deep, having a capacity of about 50 tons of ore, as a 5 to 1 pulp. From (12) and (16); deliver pulp to (26) and overflows to (17).

15. Battery-solution storage tank, 20 feet in diameter and 15 feet deep with a capacity of 147 tons of solution. From (23); delivers weak cyanide solution to (5) and (16).

16. Lime mixer. From (15); delivers to (14).

17. Solution settling tank, 33 feet in diameter and 8 feet deep with a capacity of 214 tons of solution. From (14); delivers overflow to (18).

18. Solution storage tank. From (17); delivers, via bottom discharge, to (19).

19. Pump, 8 inches in diameter with a 10-inch stroke. From (18); delivers to (20).

20. Gold-solution storage tank. From (19); delivers to (21).

21. Twelve zinc-precipitating boxes, 3 feet 5 inches long, 2 feet 2.5 inches wide, and 2 feet 10 inches deep. Use 0.22 pound of zinc shavings, cut from No. 9 sheet zinc, per ton of solution treated. From (20) and (29); deliver solution to (22), excess solution to (24) and precipitate which is treated with sulphuric acid, washed, dried, fluxed, melted, and then shipped to the mint.

22. Two solution storage tanks. From (21) and (25); deliver to (23).

23. Byron Jackson centrifugal pump with cast-iron liners which have a life of about 18 months. The pump lifts 80 feet. From (22); delivers to (15).

24. Four wash tanks. From (21) and water from water storage tank which is fed by an external pipe line; deliver to (25).

25. Byron Jackson centrifugal pump with details same as (23) and lifting 30 feet. From (24); delivers to (22).

26. Six 17-foot cone-bottom agitators. From (14); deliver to (27).

27. Krogh centrifugal pump with 5-inch cast-iron liners which have a life of about 4 months. The pump lifts 30 feet. From (26); delivers to (28).

28. Equalizer tank, 20 × 15 feet with a capacity of 147 tons of solution. From (27); delivers to (29).

29. Three loading tanks. From (28); deliver filtrate to (21) and slimes to (30).

30. Byron Jackson pump with 4-inch sheet-steel liners which have a life of 6 weeks. The pump lifts 40 feet. From (29); delivers to (31).

31. Classifying tank. From (30); delivers spigot to (33) and overflow to (32).

32. 120 Canvas tables, 4 × 12 feet. A 16-ounce duck, which costs 5.5 cents per yard, is used. The material has a life of 1 year. From (31) and (37); deliver concentrates to (36) and tailings to (40).

33. Ten No. 5 Wilfley tables making 290 0.5-inch strokes per minute. Each table treats about 20 tons of ore per 24 hours. From (31); deliver concentrates to (39), middlings to (34), and tailings to (40).

34. Wilfley table with details same as (33). From (33); delivers concentrates to (39) and tailings to (35).

35. Elevator with 6-ply belt, 58 feet long, and 6 inches wide. The belt has a speed of 696 feet per minute and a life of 1 year. Buckets, 5 × 3 inches, are placed 6 inches between centers and have a life of about 3 years. From (34); delivers to (36).

36. Classifier with 5 spigots. From (32) and (35); delivers spigots to (38) and overflow to (37).

37. Elevator with 6-ply belt, 65 feet long, 10 inches wide, and traveling 689 feet per minute. The life of the belt is about 18 months. Buckets, 9 × 5 inches, are placed 6 inches between centers and have a life of about 2 years. From (36) and (38); delivers to (32).

38. Five 6-foot vanners with end shake. From (36); deliver concentrates to (39) and tailings to (37).

39. Wooden concentrates-bin, 24 feet long by 10 feet wide with bottom sloping at 45°. The bin has a capacity of 100 tons. From (33), (34), and (38); delivers, via tram cars, to railroad cars and thence to smelter.

40. Tailings launder. From (32) and (33); delivers to waste via creek.

This plant uses the Moore filter press system. Regarding it, Mr. Nutter, superintendent of the company, says, "the Moore plant was put into commission about the middle of May, 1905, and since then has treated approximately 225,000 tons of slimes. At the present time it is treating in excess of 9,000 tons per month, with 5 sets of filters, each containing 66 leaves, 6 × 8 feet. A complete cycle of operations takes about 2 hours."

"From time to time determination of the soluble gold left in the tailings have been made and it runs about 0.0025 ounce per ton of solution. The solution also has about 0.03 ounce of soluble silver left in it per ton."

The mill is operated throughout on an 8-hour shift basis with 3 shifts per day. The plant runs continuously unless stopped by break-down or accident. There are only two regular stops throughout the year, Fourth of July and Christmas being observed as holidays.

The minimum rate of pay is $3 per shift and varies up to $5 for foremen.

Four men per shift are employed on the batteries and tube mills, 3 men

per shift on the settlers, agitators, and filter plant, 1 man per shift on the vanners and Wilfley tables, 1 repair man on day shift, from 1 to 3 men per shift on the canvas tables, 2 men per shift in the precipitation plant, and an extra man when cleaning up.

During most of the year the supply of water is ample for milling purposes and during the summer months a portion of the stamps are run by water power. During January, February, and March, however, economy must be exercised in the use of water and there is no over supply for power. Electricity is purchased from the Telluride Power Company, which has ample capacity to supply all needs. The power consumed by the various machines is as follows:

Breaker (2)	30	horse-power		
Conveyor (3)	4	"	"	
Stamps (5)	175	"	"	
Tube mills (9)	45	"	"	to run and 90 horse-power to start.
Pump (25)	10	"	"	
Agitators (26) and Krogh pump (27)	45	"	"	
Pump (30)	17	"	"	

Wilfley tables (33), (34), and vanners (38), etc., 20 horse-power.

B. 5. AMALGAMATION FOLLOWED BY LIXIVIATION.

Mills 104, 105, 106, 107, 108, 109, and 110 are typical of this group in four districts.

§ 1433. MILL NO. 104. PITTSBURG-SILVER PEAK GOLD MINING COMPANY, BLAIR, NEVADA.[124] — The ore [94] is a white crystalline quartz containing from 1% to 2% of lead and iron sulphides. Considerable gold with a little silver constitute the economic minerals. The problem is to save the gold and silver.

Rock House.

1. Receiving bin. From the mine;[125] delivers to (2).
2. No. 6 breaker. From (1); delivers crushed ore to (3).
3. Elevator. From (2); delivers to (4).
4. Grizzly. From (3); delivers undersize to (6) and oversize to (5).
5. Two No. 3 breakers. From (4); deliver crushed ore to (6).
6. Bin. From (4) and (5); delivers to (7).
7. Aerial tramway. From (6); delivers, via bin and gates, to (8).

Stamp House.

8. Conveyor. Runs the entire length of (9) and discharges by automatic tripper. From (7); delivers to (9).
9. Battery bin. From (8); delivers to (10).
10. Twenty automatic feeders. From (9); deliver to (11).
11. One hundred stamps in 20 batteries arranged in 10 pairs. Stamps weigh 1,050 pounds each. From (10) and (32); deliver pulp to (12).
12. Twenty amalgamating plates. From (11); deliver amalgam to retort and pulp to (13).
13. Two settling cones. From (12); deliver spigots to (14) and overflows to (15).
14. Eight Merrill sizing cones. From (13) and (33); deliver spigots to (17) and overflows to (15).
15. Three dewatering tanks. From (13) and (14); deliver spigots to (16) and overflows to (30).
16. Slimes accumulator. From (15); delivers to (26).

Cyanide Plant.

17. Sand distributor. From (14); delivers to (18).

18. Five sand-leaching vats. From (17), (22), (23), and (29); deliver sands to waste, effluent solution to (19) and (24), and water to (28).

19. Three weak-solution precipitation tanks. From (18), (26), and (34); deliver to (20).

20. Pump. From (19); delivers to (21).

21. Merrill filter press. From (20); delivers precipitates to refinery, weak solution to (22) or (23), and barren solution to waste.

22. Weak-solution storage tank. From (21); delivers to (18) and (26).

23. Strong-solution storage tank. From (21) and (25); delivers to (18) and (26).

24. Strong-solution sump tank. From (18) and (26); delivers to (25).

25. Pump. From (24); delivers to (23).

26. Merrill filter presses. From (16), (22), (23), (29), and (30); deliver slimes to (27), effluent solutions to (19) and (24), and water to (28).

27. Slimes residue dewatering tank. From (26); delivers spigot to dump and overflow to (28).

28. Overflow (lime) water tank. From (18), (26), and (27); delivers to (29).

29. Pump. From (28); delivers to (18) and (26) or (33).

30. Overflow soft-water tank. From (15); delivers to (31) and wash water to (26).

31. Pump. From (30); delivers to (32).

32. Battery (soft-water tank). From (31); delivers to (11).

33. Sluicing (lime) water tank. From (29); delivers to (14).

34. Zinc feed. Delivers to (19).

§ 1434. MILL NO. 105. THE GREAT BOULDER PERSEVERANCE MINE, KALGOORLIE, AUSTRALIA.[46] — The ore is a grey and green schist containing disseminated pyrite, arsenopyrite, tellurides, and quartz.[134] The problem is to save the gold and silver. The value of the ore is about $12.50 per ton. The ore is trammed, 120 feet from the mine, to the breaker house where it is weighed on Avery automatic scales, full and empty car weights being recorded on a Morse tape. Thence the ore is dumped to (1).

Ore Breaker.

1. Grizzly. From cars; delivers oversize to (2) and undersize to (3). Outside dimensions are 6.2 × 7 feet, spaces between bars 2.5 inches, and slope 62.5°.

2. Gates breaker, No. 5. From (1); delivers crushed ore to (3). For power and capacity see (4).

3. Two Grizzlies. From (1) and (2); deliver oversize to (4) and undersize to (5). Outside dimensions are 3.83 × 7 feet, space between bars 0.75 inch and slopes 49°.

4. Two Gates breakers, No. 3. From (3); deliver crushed ore to (5).

These breakers (2) and (4), are driven by a 60 horse-power Sprague motor. They break 2 tons per horse-power hour and require 15.4 horse-power when running idle. Total capacity of breakers is 900 tons per 24 hours; but they are in actual operation only one-half the time and break 480 tons per 24 hours.

5. Breaker bin with a flat bottom. From (3) and (4); delivers to (6). Dimensions are 40 × 29.5 × 26 feet, and the capacity is 1,000 tons, of which 600 tons is live ore.

6. Challenge feeder. From (5); delivers to (7).

7. Robins belt conveyor. From (6); delivers to (8). This belt is 18 inches wide and 140 feet long. It elevates the ore 34 feet, running at an angle of 14° with the horizontal. The belt handles 480 tons per 24 hours and requires 5 horse-power. Its life is about 3 years. Boys are employed to pick out bits of unexploded dynamite and waste. In case of break-downs an elevator and trucks are provided.

8. Bin. From (7); delivers to (9). Capacity 22 tons.

9. Trucks. From (8); deliver to (10). Each truck holds 1,700 pounds.

Ore Crusher.

10. Griffin mill bin. From (9); delivers, by 16 chutes, to (11). Length 136 feet, and section is triangular, 3.5 × 3.25 feet. Chutes are supplied with ore through gates operated by rack and pinion.

11. Sixteen automatic slide-feeders. From (10); deliver to (12). These are of the sliding-block type and are driven by an eccentric with a movement of 1 inch.

12. Sixteen Griffin mills, No. 11. From (11); deliver to (13). Run dry. Each mill has a cast-iron base, 4 feet square, securely bolted to concrete foundations. The die ring, 30 inches in diameter, is fastened to this base. The crushing is performed in a similar manner as that in the Huntington mill, but only one crushing roller, 15 inches in diameter, is used. The shaft is 6.5 feet long and is supported by ball bearings, which reduce the friction very much, resulting in a saving of at least 20 horse-power. Each mill is thrown in and out of action by means of friction clutches. The shaft of the mill makes 198 revolutions per minute. Only fifteen mills operate at one time, the other being out for repairs. Each mill is in operation between 85 and 95% of the time. The die rings are rotated to get even wear, the feed side wearing faster. Details of wear: Die rings, 18 days; roll tires, 9 days; plows or followers, 9 days; roll bodies, 6 months; shafts, 6 months; body nuts, 18 days; follower nuts, 3 months; ball and trunnions, 3 months; thrust rings, 18 days; feeder shafts, 6 months. Cast iron lasts through a few dynamite explosions at most and cast-steel pans from 12 to 20 explosions; ball bearings have a long life, the balls showing no unevenness after 6 months' use. The screen used is of wire cloth with 0.043-inch openings. Capacity of each mill, 37 tons per 24 hours. The feed passes a 1.25-inch ring. The total power with 13 mills running is 234 horse-power or 18 horse-power per mill. Each mill crushes 2 tons per horse-power day.

Screen-sizing tests on the crushed rock from the mills show the following results:

Screens used on Mill.	0.043-inch.	0.068-inch.	0.064-inch.
+ 20	0.30	3.50	2.50
−20+ 30	1.00	5.15	4.00
−30+ 40	2.20	4.75	4.50
−40+ 60	5.50	8.75	7.15
−60+ 80	5.35	5.25	5.35
−80+100	4.15	4.00	4.85
−100+120	2.00	2.65	2.25
−120+150	7.35	5.00	6.00
−150+200	4.05	2.15	1.65
−200	68.10	58.80	61.75
Total	100.00	100.00	100.00

This is a finer pulp with a coarser screen than a ball mill gives with a finer screen.

13. Sixteen screw conveyors. From (12); deliver ore to (16) and dust to (14). Conveyors are 10 inches in diameter and run at 38 revolutions per minute.

14. Sturtevant fan. From (13); delivers to (15). All the dust from the

Griffin mills is carried off by this fan. It is capable of displacing 14,000 cubic feet of air per minute.

15. Four Cyclone dust-settlers. From (14); deliver to (17). These chambers are conical in shape and are arranged in series. They have a capacity of 566.5 cubic feet each. The dust-laden air is delivered tangentially to the sides near the top. They recover about 80% of the dust which amounts to 100 pounds per hour. The effluent air goes into a large dust chamber, which recovers the bulk of the remaining dust. This recovered dust is returned to the system at (17).

16. Robins belt conveyor. From (13); delivers to (17). Width of belt 22 inches and it has a speed of 88 feet per minute.

17. Elevator. From (15) and (16); delivers to (18) or (19). There are 42 buckets, spaced 2 feet apart. The belt travels 376 feet per minute. The ore is raised 34 feet.

Roasting.

18. Reserve bin. From (17); delivers to (19) by means of screw conveyor and elevator. Capacity 300 tons.

19. Screw conveyor. From (17) and (18); delivers to (20). Length 150 feet and varying in diameter from 9 inches at the back end to 5 inches at the front end. It runs at the rate of 30 revolutions per minute and requires 5 horse-power. As an alternative, in case of a breakdown, there is a Robins belt conveyor, 270 feet long and 14 inches wide, driven at a speed of 196 feet per minute, consuming 3 horse-power, and delivering into the feed hoppers of (20).

20. Six "Perseverance" furnaces. From (19); deliver roasted ore to (21). These furnaces are placed in two separate sheds at right angles to each other, four in one shed and two in the other. In order to supply the last two furnaces there is a conveying system consisting of two belt conveyors at right angles; the first is 95 feet long, 14 inches wide, and has a speed of 288 feet per minute, delivering to the second, which is 128 feet long, 14 inches wide, running the entire length of the two furnaces, and delivering to two screw conveyors. Each is 14.5 feet long, 9.5 inches in diameter, driven at 52 revolutions per minute, and requires 0.5 horse-power.

Each furnace is equipped with two hoppers, 5 × 3.5 feet at the top and 6 feet deep. Two sides are vertical, the other two converging to give a narrow feed slot. About 4 inches below this slot there is a horizontal feed plate, moved back and forth by an eccentric. Variations of feed are obtained by altering the speed and throw of the eccentric. The furnaces, as originally built, were of the Holtoff-Wethey type, but defects in the rabbling led to the introduction of the Edwards mechanical system. The capacity of each furnace is 95 tons per 24 hours or 1 ton per 15.5 square feet of roasting surface. There are 4 fire boxes per furnace, arranged in pairs, with hearths 2.5 × 6 feet. Flue dust is caught in the goose-neck and main flue and returned to the furnace every month.

21. Six cooling floors. From (20); deliver to (22).

22. Push conveyor. From (21); delivers to (23). The sand drops onto this conveyor through a screen. The conveyor has flights, 2.25 feet by 7 inches, and makes twenty-six 18-inch strokes per minute.

23. Chain bucket elevator. From (22); delivers to (24). Length is 64.5 feet and it has 86 buckets, each 12 × 6 × 5 inches, placed 18 inches apart. In case of a breakdown to (22) or (23), there is a screw-conveyor system delivering to a chain bucket elevator, identical to (23) and delivering to (24).

Amalgamation.

24. Mixer. From (23); delivers to (25). Weak cyanide solution is added from the exhausted liquor of the extractor boxes and sufficient to make pulp of the consistency of three parts water to one part solids, by weight. The mixer is of the vortex type with a propeller agitator, and has a curved bottom and closed top.

25. Two spitzkasten. From (24); deliver spigots to (26) and overflows to (31). These spitzkasten are pyramidal in shape, 5 feet square at the top, and 5.67 feet deep. The spigots are normally 0.75 inch in diameter but vary with the tonnage; a capacity of 500 tons per 24 hours requiring 0.875-inch diameter spigots. They act as primary classifiers.

26. Ten grinding amalgamating pans. From (25); deliver overflows (pulp), to (27) and amalgam to retort. For description see (30).

27. Agitation vat. From (26) and (30); delivers to (28).

28. Sand-pump. From (27); delivers to (29). Stroke of pump 4 feet.

29. Two secondary spitzkasten. From (28); deliver spigots to (30) and overflows to (31). For dimensions see (25).

30. Four grinding amalgamating pans. From (29); deliver overflows (pulp) to (27). The fourteen amalgamating pans, (26) and (30), of which the former run at 31 revolutions per minute and the latter at 27 revolutions per minute, are each 8 feet in diameter and 3.25 feet deep. The sides are of mild steel or wrought iron while the bottoms are of cast iron. The muller has 8 shoes, each in the shape of a sector of a circle, 2.5 inches thick and of 220 pounds weight. The grinding is done upon 12 dies, shaped like the shoes, and weighing 283 pounds. There is a hollow space about the dies for the collection of mercury. A set of shoes lasts 3 to 6 months and a set of dies 12 months. The abrasion amounts to about 13.2 ounces per ton of sand treated. The power required is 9 horse-power in the case of the former ten pans, and 6 horse-power in the case of the latter four pans. 1.4 tons of sand is slimed per horse-power day or 1 ton per square foot of shoe grinding-surface per 24 hours. The consumption of mercury varies from 0.1 to 0.2 ounce per ton of ore treated and the gold recovered in the amalgam varies from 30 to 35% of the total yield.

The following are typical sizing analyses of the products from the fine-grinding system when the capacity is 480 tons per 24 hours.

Screening.	Roasted Ore.	Number 1 Classifier.		Primary (10) Grinding Pans. Outflow.	Number 2 Classifier. Overflow.	Secondary (4) Grinding Pans. Outflow.	Outflow from 14 Pans When Grinding from Number 1 Classifier.
		Overflow 53.2 Percent of Tonnage.	Underflow ¾ Inch Spigots 46.8 Percent of Tonnage.				
+ 20	.....	.....	0.2	.....	.....	.....	0.1
−20+ 30	1.7	.....	2.2	.....	.....	.....	0.1
−30+ 40	2.5	.....	6.7	.....	.....	.....	.....
−40+ 60	6.0	0.1	14.1	1.8	.....	0.4	0.7
−60+ 80	6.0	0.1	13.7	8.8	.....	3.6	3.4
−80+100	5.3	0.2	10.4	13.8	0.2	22.7	8.7
−100+120	2.5	0.2	6.0	5.8	0.6	1.8	4.0
−120+150	4.0	1.2	15.6	22.1	6.2	42.6	20.9
−150+200	5.0	0.9	2.1	1.7	3.4	1.5	2.4
−200	67.0	97.3	29.0	46.0	89.6	27.4	59.7

31. Two prismatic settlers. From (25) and (29); deliver spigots and overflows to cyanide slimes plant. These settlers work alternately and reduce the pulp from a consistency of 25% solids to one of 40 to 45 % solids and clear water. Each prism, 63 feet long, 5.5 feet wide, and 5.5 feet deep, has a settling area of 346.5 square feet and a capacity of 1,236 cubic feet. The ends are vertical and the sides vertical for 15 inches, then they converge to a 10-inch base. The

settlings are discharged through thirty-one 1.5-inch holes, placed 2 feet apart, on the bottom. These orifices are closed by a valve consisting of a rubber plug and a vertical rod operated by single cams on a shaft revolving 6 times per minute. Slimes are run into a settler until the overflowing water shows muddy, when the cam shaft is revolved and the discharge is regulated so that it will exceed the inflow. This is continued until the discharging slimes show, by testing, 30% solids. The shaft is stopped, the tank allowed to fill, and the settler given a period of rest in which the slimes have a chance to settle. Meanwhile the other is going through the same cycle of operations.

Power.

The mill engine is a horizontal compound-condensing Corliss engine with a nominal horse-power of 450, built by the E. P. Allis Company. Its length of stroke is 48 inches, number of revolutions per minute 77, and cylinder diameters 20 and 36 inches. It drives the Griffin mills, conveyors, and a 150-kilowatt direct-current dynamo. Steam is delivered at 135 pounds pressure, exhausted into a 25-inch vacuum and it consumes 13.1 pounds of steam per indicated horse-power. A Brush compound-condensing vertical engine, with cylinder diameters of 22.75 and 34 inches, drives directly a 200-kilowatt direct-current dynamo at 240 revolutions per minute. It has a steam pressure of 135 pounds and exhausts into an 18-inch vacuum. With a load of 300 horse-power, its steam consumption is 30 pounds per indicated horse-power. Each engine has its own condenser and oil separator. For supplying air to the reduction plant and for underground requirements, there are two Ingersoll-Sergeant air compressors, fitted with Corliss valves, delivering air at 90 pounds pressure. The current generated by the two dynamos is distributed among nineteen various type motors and the lighting system. The motors are used to operate various parts of the reduction works machinery and vary from 5 to 60 horse-power. The plant is electrically lighted throughout.

Steam is supplied by 10 Heine horizontal water-tube boilers, each of 110 horse-power capacity. The grate area is 18 square feet and heating surface 1,000 square feet per boiler. The fuel used is green salmon gum and mulga. Feed water is supplied by three pumps, each being large enough to fulfil the boiler requirements.

Power costs $0.486 per horse-power day.

Labor.

Total labor employed per 24 hours is 116 men and 12 boys, divided equally into three shifts. The distribution per 24 hours is as follows:

On breakers, 6 men and 3 boys; on transport of ore, 3 men and 6 boys (picking belt); in Griffin mill department, 10 men and 3 boys; in amalgamation and agitation department, 9 men; in filter-pressing department, 35 men; in precipitation department, 3 men; on disposal of tailings, 11 men; foremen, 3 men.

Costs, Assays, etc.

An average of 3 months' work showed: value of ore $12.66 per ton for the 44,363 tons milled; amalgamation extracted 29.37% of total value in the ore; cyaniding extracted 62.15% of the value; and 8.48% of the value was thrown away in the tailings.

The average cost of milling the ore was $3.1225 per ton.

§ 1435. MILL NO. 106. HOMESTAKE MINING COMPANY, LEAD, SOUTH DAKOTA.[125] — The Homestake Mining Company owns or controls 250 claims, comprising 2,616 acres and covering about 8,000 feet along the strike of the

lode.[51] It owns and operates 6 stamp-mills, containing an aggregate of 1,000 stamps, and crushes about 4,000 tons per 24 hours. The unique features in these mills are the construction of the stamps, the great length of the amalgamation plates, the absence of concentration, and the treatment of the sands and slimes in the cyanide plants.

The ores treated are of two types, the oxidized, or open-cut ore, and the sulphide, or Homestake lower-level ore, containing 7 or 8% of sulphides, mainly pyrite and pyrrhotite in approximately equal proportions, together with small amounts of chalcopyrite and arsenopyrite in a gangue of schist or slate. Each class of ore is treated in separate mills, the former in the Pocahontas mill (160 stamps), while the latter class is treated in the Homestake mill (200 stamps), Golden Star mill (200 stamps), Amicus mill (240 stamps), Monroe mill (100 stamps), and the Mineral Point mill (100 stamps).

The ore receives its first crushing in rotary breakers at the hoists.[5] It is here reduced to a maximum of 4-inch cubes. A second crushing at the Ellison hoist is now being arranged for. It is conveyed from the hoist bins in cars and dumped to (1).

1. Mill bins. From cars; deliver, via chutes, to (2).

2. Two hundred feeders. From (1); deliver to (3).

3. One thousand stamps comprising 200 batteries. These stamps are equipped with Homestake narrow-pattern mortars which are only 12 inches wide at the lip. When new, the stamps weigh 900 pounds; they drop 10.5 inches and make 88 drops per minute. The shoes and dies are made of cast iron. From 10 to 12 tons of water are used per ton of ore crushed and mercury is introduced into the mortars. The stamp duty is 4 tons per stamp per 24 hours. The pulp is very fine, about 80% passing a 100-mesh screen and nearly 60% passing a 200-mesh screen. The screens are the steel needle-slot type, No. 8 size. Discharge is 11 inches above the top of the dies. From (2); deliver pulp to (4) and amalgam to retort.

4. Two hundred sets of amalgamating plates. Each set is composed of 4 plates, 4.5 × 12 feet and 0.125 inch thick, the apron plate being of copper and the other three being silver-plated copper (2 ounces of silver per square foot). It has been found that maximum results in amalgamation are attained when the temperature of the water is low enough to exert a minimum influence upon the minerals. Between 70 and 75% of the values are extracted. The total average cost of milling the ore is about 40 cents per ton, although in the Amicus mill, which is the largest and most modernly equipped, the present cost is estimated at 22 cents per ton, of which 18 cents is apportioned to crushing and 4 cents to amalgamation. From (3); deliver pulp to (5) and amalgam to retort.

Slimes and Sand Separation.

The pulp as it comes from the mills has a consistency of about 12 parts water to 1 part solids. Of these solids about 65% is leachable material and 35% is slimes or unleachable material. In order to effectively treat the pulp with cyanide it is necessary to separate the slimes from the sands. This is effected by a system of settling cones and classifiers. The first treatment of the pulp takes place at the stamp mills in what is called the Upper Cone House, whence it is conveyed, by a 12-inch pipe, to Cyanide Sand Plants No. 1 and No. 2 respectively, where it receives further separation before the cyanide treatment. The pulp from Lead City mills goes to (5).

5. Sixteen gravity settling-cones. These cones are of iron, 10 feet in diameter at the top and have sides sloping at 50°. The overflows have a consistency of about 30 parts water to 1 part solids, the solids all passing 200 mesh. From (4) (640 stamps); deliver spigots to (6) and overflows to (18).

6. Twelve gravity settling-cones. These cones are 7 feet in diameter, otherwise the same as (5). The overflows are similar to those from (5). From (5); deliver spigots to (7) and overflows to (18).

7. Pipe line, 0.25 mile long with a minimum grade of 2.5 %. Pipe is 12 inches in diameter, flanged, and of cast iron. From (6); delivers to (8).

Cyanide Sands Plant No. 1. *Capacity* 1,800 *tons per* 24 *hours.*

8. Nine gravity settling-cones which are identical with (6). From (7); deliver spigots to (9) and overflows to (19).

9. Thirty-six cone classifiers, 3.5 feet in diameter and equipped with a special design of feed-water inlet for discharging sands and admitting the water (an invention by Mr. Merrill).

The spigot product thus obtained is a leachable material, although containing considerable fines, but free from mud. Six tests show coarse (remaining on 100 mesh) 34%, middles (100 to 200 mesh) 33%, and fines (passing 200 mesh) 33%. It contains 10 to 12% of pyrite. Lime is added at this point, between 3 and 5 pounds being used per ton of mixture. The lime is only of the purest, any magnesia being objectionable. It is crushed in a stamp battery equipped with a wire screen having 0.172-inch square perforations. From (8); deliver spigots to (10) and overflows to (19).

10. Two distributors of the Butters-and-Mein type. One is used for each row of vats. From (9); deliver to (11).

11. Twenty cyanide tanks, 44 feet in diameter, 9 feet deep, and holding 610 tons of sand each. Each requires from 7.75 to 8.25 hours to fill. They are fitted with a double filter-bottom, the top one being 8-ounce duck, underlaid by a second filter of cocoa-matting. There are four side gates and one center gate. After filling the tank the water is drained off and the top of the sands are leveled. Strong cyanide solution (0.14% KCN) is run on and left in contact with the sands continuously for three days. The effluent solution is run to (12). Weak solution (0.07% KCN) is then run onto the sand and the contact is maintained for two days. Effluent solution is run to (14). The sands are washed until the effluent solution is down to 0.02% KCN (5 to 7 cents per ton). The sands are then sluiced out, with a 3-inch hose, through the gates. This requires two men about 4 hours. The tanks and filters are thoroughly cleaned and are then ready for another charge. From (10), (15), (16), and (17); deliver sands to waste and solutions to (12) and (14).

12. Two weak-solution precipitation tanks, 26 feet in diameter, 19 feet deep, and holding 300 tons of solution. The solution is run into these tanks until the full capacity is reached. Its value is about $3 per ton. Solution is then pumped, an emulsion of zinc dust being added to the suction pipe of the pump. (Patent applied for.) This emulsion contains about 60 pounds of zinc, or 1 pound of zinc dust per 5 tons of solution. The mixture is elevated to (13) by a compound, duplex, outside packed, plunger-type pump. From (11); deliver to (13).

13. Filter press, 36 inches square, of the flush-plate and distance-frame pattern, containing 24 frames, each 4 inches in depth. The solution is reduced in value from $2 to 2 cents per ton and contains 0.1% of KCN. The press is run one month before cleaning up. From (12); delivers precipitate to refiner and solution to (16).

14. Two collecting tanks. These are identical in size to (12). The solution is strengthened with KCN up to 0.14% and run directly, without precipitation, to (15). From (11); deliver to (15).

15. Stock-solution tank for strong solution. From (14); delivers to (11).

16. Weak-solution tank. From (13); delivers to (11).

17. Wash water tank. Delivers to (11).

The percentage of values in the sands recovered is 74.7 (average of 6 months). The cost of cyaniding is about $0.27 per ton.

Slimes Treatment.

The overflow from the settling cones and classifiers contains the slimes in a very dilute condition, about 30 parts of water to 1 part of solids, the solids easily passing a 200-mesh screen. Economy both in subsequent treatment and water, necessitates the dewatering of this material, which is accomplished by clarifying tanks.[139]

18. Eighteen clarifying tanks. Nine of these tanks are 26 feet in diameter. and the others are 18 feet in diameter. All are 20 feet deep. They are built of redwood, have vertical sides and contain a false conical bottom which serves to prevent any sudden slide of thick slimes into the spigot opening. From (5) and (6); deliver spigots to (21) and overflows of clear water to sluicing reservoir.

19. Six clarifying tanks, 26 feet in diameter and 24 feet deep. The spigot product from these tanks has a consistency of about three parts of water to one part of solids. This material is conveyed three miles in a 12-inch cast-iron pipe line on a minimum grade of 1.5%. From (8) and (9); deliver spigots to (20) and overflows to waste or to Sands Plant No. 1.

20. South Division sludge-storage tank, 26 feet in diameter and 20 feet deep. From (19); delivers to (21).

The treatment of the Terraville pulp is very similar to that of the South Division already described, with the one point of difference that one intermediate set of settling cones is omitted.

The mill at Central sends its pulp directly to settling cones at Cyanide Sand Plant No. 2, where both the Terraville and Central sands receive the cyanide treatment, similar to that of Cyanide Sand Plant No. 1. The overflow from the settling tanks and classifiers corresponds closely to that already described and is conducted in like manner to the North Division sludge-storage tank, identical with (20).

Cyanide Slimes Plant.

21. Twenty-four filter presses.[140] The slimes are brought to the filter house in a 12-inch pipe, thence along the entire length of the filter buildings in two 10-inch pipes and to the filter presses in 6-inch pipes, being connected to the presses by flexible hose. From (18), (20), and North Division sludge-storage tank, (24), (25), (26), and (27); deliver slimes to waste and solutions to (22) and (25).

A filter press consists of an outer supporting frame, 91 flush plates, 92 distance frames, a follower head with thrust screws, together with the necessary connections for entrance and exit of solutions, pulp, etc. The supporting frame consists of massive front and rear standards, spaced 46 feet apart and joined by side rails made from 15-inch channel iron. The plates and frames are rectangular in form, 4 × 6 feet outside, and the plates have both faces corrugated. The unique feature of this press is the automatic sluicing device. The sluicing is effected by means of a small nozzle which may be directed toward any portion of the compartment by turning the pipe about its axis. (Patented.)

The press is filled by opening 6 feed pipes by one movement of a lever, the pulp enters the press under a gravity head of 35 pounds. The cakes are subjected to 6 hours' treatment consisting of lixiviation, oxidation, and washing. The slimes cake is then sluiced out, about 4 tons of water per ton of slimes being used.

Each press has a capacity of about 25 tons of dry slimes and the time necessary for a complete cycle is about 8 hours, or each press has a capacity of 75 tons of slimes per day.

22. Weak precipitation tanks. The solution from the first lixiviation is drawn from these tanks and is pumped to the press after receiving a carefully gauged amount of zinc dust in the form of an emulsion. From (21); deliver to (23).

23. Filter press. From (22); delivers precipitate to refiner and weak solution to (24).

24. Weak-solution storage tanks. From (23); deliver to (21).

25. Strong-solution tanks. The weak solution from (24) is used for the second lixiviation and is strengthened by adding KCN and returned to the strong-storage tanks. From (21); deliver to (21).

26. Wash water tank. Delivers to (21).

27. Sluicing-water storage tank. Capacity 100,000 gallons. From sluicing reservoir; delivers to (21).

The capacity of this plant is about 1,800 tons per day and the cost for January, 1908, was 27 cents per ton.

Refining Plant.

The precipitates from the cyanide plants are refined with a loss of less than 0.1%. The precipitate is put into a lead-lined tank equipped with an agitator, and treated with dilute HCl. They are then allowed to settle and the supernatant liquid is drawn off and passed through a filter press. Sulphuric acid is then put into the tank and the mixture again agitated and this time heated. The precipitates are again allowed to settle and the supernatant liquid is passed through a filter press as before. Wash water is now pumped into the tank and the whole mixture is passed through the filter and the precipitate washed thoroughly. The precipitate is then dried on a steam bath and mixed with litharge, borax, silica, and powdered coke. This mixture is sprinkled with lead acetate and briqueted, under a pressure of 4,000 to 6,000 pounds per square inch. After drying, the briquettes are melted down and the borax slag drawn off and sent to a blast furnace. The button remaining is cupeled and the metal thus obtained is run into bars ready to ship to the mint. This metal is 975 to 985 fine gold. The total cost of refining is about $0.15 per ounce.

§ 1436. General Milling Practice in the Witwatersrand, South Africa.[164] — The ore,[47 48] treated is mediumly hard conglomerate consisting of quartz pebbles held in bond by a siliceous and partly ferruginous cement. Distinctly crystalline free gold and auriferous pyrite are the economic minerals. The values are practically all contained in the cementing material.

The general practice of the modern mills is outlined in the following tree:

Ore from the mill bins [142] goes to (1) via automatic feeders.

1. Stamps. From the mill bins; deliver pulp to (2). The stamps weigh from 900 to 1,670 pounds. The success of the heavy stamps, tried at first as an innovation in one or two of the principal mills, is now an undisputed fact. It is found that the cost of the extra power used to lift them is more than offset by the increased crushing capacity obtained and their use is rapidly becoming general. Coarse crushing, from 0.9 to 1.5 millimeters, is universal. The commercial value of high stamp-duties is evinced on the maintenance side, as there are fewer plates to dress and fewer parts to require adjustment. On the capital side, a smaller expenditure is required for mortar boxes, shafting, buildings, and the like.

2. Amalgamating plates. From (1); deliver amalgam to retort and pulp, elevated by wheel, to (3).

3. Spitzkasten. From (2) and (6); deliver spigots of heavy pyritiferous product to (4) and overflows to (7).

4. Tube mills. From (3); deliver pulp to (5). The great value of tube mills on the Rand arises from three causes: first, their use leads to an increase in the percentage of gold extracted; second, to an increase in the tonnage crushed; and third, by increasing the tonnage milled, the tube mill tends to reduce the per-ton rate of working costs. The percentage recovery by amalgamation has been considerably increased, and a decrease, though not to a corresponding extent, has taken place in the percentage of values recovered by cyanide. Spitzkasten concentrates, as such, have been done away with and in place of having three products to cyanide, — spitzkasten concentrates, sands, and slimes, there are now only two, sands and slimes. With only one leachable product instead of two, it is possible to greatly simplify the plant. When tube mills were first installed it was generally prophesied that they would greatly increase the percentage of slimes produced. They have had only a slight effect in this direction and the mines have not had to meet any large expenditures for new slimes plants.

5. Amalgamating plates. From (4); deliver amalgam to retort and pulp to (6).

6. Spitzkasten. From (5); deliver spigots, via pulp elevator, to (3) and overflows to (10).

7. Spitzkasten. From (3); deliver sands through spigots to (8) and overflows to (9).

8. Sand-treatment tanks. From (7) and (12); deliver washed sands to waste dump and gold solution to (12).

9. Slimes-settling tank. From (7); delivers settled slimes to (10) and overflow to (13).

10. Slimes-treatment tanks. From (6), (9), and (12); deliver to (11).

11. Filter presses. From (10); deliver gold solution to (12) and washed cake to waste dump.

12. Zinc-precipitation boxes. From (8) and (11); deliver zinc with precipitated gold to an acid treatment, thence to bank, and residual solution to sump, which delivers to either (8), (10), or (13).

13. Mill service tank. From (9), (12), and water main; delivers to mill system.

In cyaniding,[73] the decantation process is still in general use. The many attempts to produce something better have resulted in a successful new method, known as the Adair-Usher process, which was introduced at several mills last year and gave quicker and more complete extractions than hitherto obtained. More attention is being paid to a longer treatment and more efficient precipitation in cyaniding. Again, the use of bisulphate of soda for precipitating the gold in the waste solutions from the acid clean-up plant is superseding the sulphuric-acid and zinc-dust treatment. This means a saving of more than half of the acid costs.

The practice of shipping the black sands of the battery residues to a smelter is being done away with in favor of processes of recovery which can be operated at the mill.

There is, in general, a marked tendency towards finer crushing and it is predicted that this may be carried to such an extent that the crushed material will consist wholly of unleachable slimes. This all-sliming process is discussed in detail under the heading of Mill 108.

Wheels for the elevation of pulp are both costly and clumsy and some mill-

men are advocating the use of some type of scraper to separate the sands from the slimes, as is the practice at some mills in the United States. Sand pumps, working on the injector principle, are also displacing the sand wheel.

§ 1437. MILL No. 107. ORE REDUCTION PLANT OF THE LUIPAARDS VLEI ESTATE OF THE CONSOLIDATED GOLD FIELDS OF SOUTH AFRICA, LIMITED. — This mill,[28] in the Witwatersrand District, is handling the typical conglomerate rock of the region at the rate of 540 tons per day. During the year[73] ending August 31, 1907, 60 stamps crushed 197,544 tons of rock.[100] Operating 365 days in the year this figure gives the duty of a single stamp as 9.02 tons per 24 hours, which is a world's record, considering the hardness of the ore treated. Working with only 60 stamps and 2 small tube mills, the Luipaards Vlei Company is doing as much work as could have been done a few years ago by a mill of 100 stamps. The increased tonnage handled is of course due to coarse crushing and the supplementary use of tube mills, but the heavy stamp used (1,550 pounds) is also an important factor. The practice of adding compensating weights to the stamp as the shoe wears down aids in keeping the stamp duty constantly at a maximum. In treating the 197,544 tons of ore handled in 1907, a recovery of 92.1% was made. The value of the yield per ton was $7.11 and the mining and milling cost was $4.90 per ton, leaving a profit of $2.21 per ton.

Ore from the mine goes, via incline tracks, to (1).

1. Trommel, 4 feet in diameter by 17.25 feet long. From cars; delivers undersize to (2) and oversize to (3).

2. Two settling tanks. From (1); deliver overflows to (7) and settlings probably go to (9).

3. Sorting belt. From (1); delivers waste rock to dump and residue to (4).

4. No. 5 Gates crusher. From (3); delivers crushed ore, via incline tracks, to (5).

5. Sixty stamps. From (4); deliver pulp to (6). Each stamp weighs 1,550 pounds. The mortar boxes are set on cast-iron anvil blocks resting on concrete foundations; battery water, which is a weak cyanide solution, is supplied from (22). Battery residues go to clean-up room which has one mechanical batea, 4 feet in diameter, and one amalgam barrel, 4 feet long and 2 feet in diameter.

6. Amalgamating plates. From (5); deliver amalgam to retort and pulp to (7).

7. Sand wheel, 57 feet in diameter. From (2), (6), and (12); delivers to (8) or (11).

8. Spitzlutten. Six pyramidal boxes, 4.75 × 2 × 2.83 feet in two rows of three each. From (7); deliver overflows to (11) and spigots to (9). The spitzlutten are provided with a by-pass between the two rows by means of which pulp may go directly from (7) to (11).

9. Two tube mills, 3.5 feet in diameter and 14 feet long. From (2) and (8); deliver pulp to (10).

10. Twelve suspended shaking amalgamating tables, each 6 feet long and 3 feet wide. From (9); deliver amalgam to retort and pulp to (7).

11. Spitzkasten. Two pyramidal boxes, 4.75 × 4.75 × 3 feet. From (8); deliver overflows to (12) and spigots to (16).

12. Return-sands spitzkasten. Two pyramidal boxes, 6 × 6 × 5.25 feet. From (11) and (16); deliver overflows to (13) and spigots to (7).

13. Decantation slimes plant consisting of six conical-bottomed steel slimes vats, 50 feet in diameter and from 12 to 16 feet deep, two 7-inch centrifugal sludge pumps, two 5-inch centrifugal solution pumps, and one 4-inch cen-

trifugal pump for water. From (12), (14), and (20); delivers decanted gold-bearing solution and first wash solution to (15), decanted second wash solution to (20), overflows to (14), and slimes to slimes dam.

14. Six steel return-water tanks, 25 feet in diameter and 8 feet deep. From (13); deliver, via pump, to (22) and also back to (13).

15. Two steel slimes-filter vats. From (13); deliver settled and washed slimes to dump and solution to (18). Vats are 25 feet in diameter and 4 feet deep.

16. Six steel sand-collecting vats, 28 feet in diameter and 8.5 feet deep, hose filled and with bottom discharges. From (11); deliver to (17).

17. Six steel leaching vats, 40 feet in diameter and 9 feet deep, having bottom discharges. From (16); deliver washed sands to sand dump via cars, and gold-bearing solution to (18). Solution is supplied, via pumps, from (21).

18. Four steel extractor-boxes with a zinc capacity of 242 cubic feet each. From (15) and (17); deliver zinc slimes, with precipitated gold, to (19) via acid clean-up plant, and solution to (21).

19. Refinery containing one retorting furnace, one calcining furnace, four Cornish smelting furnaces, and one bullion furnace. From (18); delivers bullion to bank.

20. Solution storage vats. Receive solution, from which the gold has been precipitated, and surplus sand solution from (21) via pumps, and decanted second-wash solution from (13). Deliver to (13).

21. Six steel sump-vats, 25 feet in diameter and 8 feet deep. From (18); deliver, via pump, to (20). In connection with these solution tanks there is one wooden sump-vat, 18 feet in diameter and 8 feet deep, for acid washings.

22. Mill-water service tank. Receives weak solution from (14) via pump, and make-up water from the slimes dam. Delivers to (5). The tank is 40 feet in diameter and 12 feet deep.

§ 1438. MILL No. 108. MILL OF THE MEYER AND CHARLTON GOLD MINING COMPANY, LIMITED, WITWATERSRAND DISTRICT, SOUTH AFRICA.[48] — The system of ore treatment at this mill is of especial interest as it embodies many radical departures from what was general practice in the district at the time the mill was erected. Moreover, these departures have not only proved successful, increasing recovery and reducing costs, but as a direct result of their success they have already led to many radical changes in the general milling practice of the Rand and will lead to still further improvements.

The features of the ore treatment,[47 70] which were absolute innovations on the Rand at the time they were installed were (1), tube milling; (2), fine grinding of heavy products; (3), second amalgamation; (4), treatment of reground heavy product with current slimes; (5), automatic separation of return water or solution to battery and handling of slimes in conical tanks of special design; (6), filter pressing; (7), circulation of cyanide solution.

The first four of these operations are to-day in general practice throughout the entire Witwatersrand District and the old schemes of concentrating on vanners and then chlorinating, or of giving the spigots from spitzlutten a long-time treatment with cyanide have been entirely abandoned. The adoption of the first four of the operations named has involved no particular or very expensive changes in the existing plants, but if filter pressing is adopted it means that the expensive decantation slime plants must be "scrapped." The same decantation plants, while undoubtedly the most clumsy and inefficient part of the whole mill equipment, are still in general use and whether or not mills now operating them will change in favor of filter pressing, is a question which time alone will tell. New plants will, however, undoubtedly install the filter-pressing system for reasons as follows:

1. In a decantation plant transference from tank to tank is effected by big delivery centrifugal pumps, while with conical tanks and filter presses the operation is carried on by gravity and at little cost.

2. With a decantation plant the best separation of slimes and solution obtainable will leave 50 to 60% of moisture in the slimes, while with a filter press 26% of moisture in the slimes is a normal figure. Then too, the operation of settling is much slower than filter pressing.

3. In a decantation plant a perfect washing of the settled slimes is impossible and gold-bearing solution is thrown away, while with a filter press every trace of gold-bearing solution may be removed by pumping water through the cake under pressure. The time consumed in washing is also much less where a press is employed.

4. In a decantation plant the slimes are discharged with a flow of water to dams; while with a filter press the washed cake, containing only 26% of moisture, goes directly to the dump via trucks or conveyor belts and no water is used, so that the necessity of slimes dams to retain water is done away with.

5. In the decantation process the average recovery is about 75% while with filter presses the recovery is 95%.

6. The actual working cost of filter pressing is slightly less than handling by the decantation process.

7. The average cost of a complete decantation slimes plant for a 100-stamp mill is $125,000, and the average cost for a plant using conical tanks and filter presses and capable of handling the same tonnage is only $75,000.

In the above comparison the results are all in favor of the filter-press system and there can be no doubt that future mills will use this method. In the case of existing plants where the supplying mines have a sufficiently long life to warrant it, an immediate replacement of the present decantation plant with the filter-press system would probably result in a final profit.

In the circulation of the cyanide solution through the stamp battery and mill system two important results are achieved: First, the gold is attacked by the solution from the moment the ore enters the mortar-box, with the result that about 98% of the gold in the slimes and 70% of the gold in the sands is brought into solution before either of these two products is settled. Second, an unnecessary waste of accumulated excess solution is done away with. The following table shows gold extraction results as obtained at the Meyer & Charlton mill:

Dissolved in mortar boxes	12.65 %
Extracted on plates	43.85 "
Dissolved in transit	26.02 "
Extracted on shaking tables	3.01 "
Extracted in treatment plants	9.76 "
Tailings contain	4.698 "
	99.988

From this table it will be seen that 85.53% of the gold is extracted before reaching either the sand or slimes treatment plant; and when this result is considered in connection with the fact that about 98% of the gold in the slimes is extracted before reaching the slimes treatment plant, it will be seen that the slimes plant acts merely as a storage tank and the sand treatment plant accounts for only 9.76% of the total values. No more convincing argument than the results given above could be offered in favor of an all-sliming process. Further, if to the credit of increased extraction obtained by an all-sliming process we add an amount equivalent to the savings effected by leaving out the sand plant altogether, the sum total, balanced against the cost of fine grinding

of the sands, shows a considerable margin in favor of all-sliming. The credits to be made in favor of sliming are:

1. The interest on and redemption of about $75,000, the cost of the sand plant.

2. The operating cost per ton, which is about 42 cents.

3. The difference between 12 cents a ton left in the slimes tailings and 40 cents a ton in the sand tailings, while on the debit side we have:

1. The cost of grinding from 60 mesh to 150 mesh, which is about 72 cents per ton.

2. The interest on and redemption of the slight outlay of capital necessary for an enlargement of filter-press plant.

To sum up, the advantages of the all-sliming method over the present practice are, first, smaller outlay of capital for plant; second, smaller operating cost; and third, higher percentage recovery.

Figs. 849 and 850 are, respectively, pulp flow diagram and solution flow diagram of the present Meyer and Charlton mill.

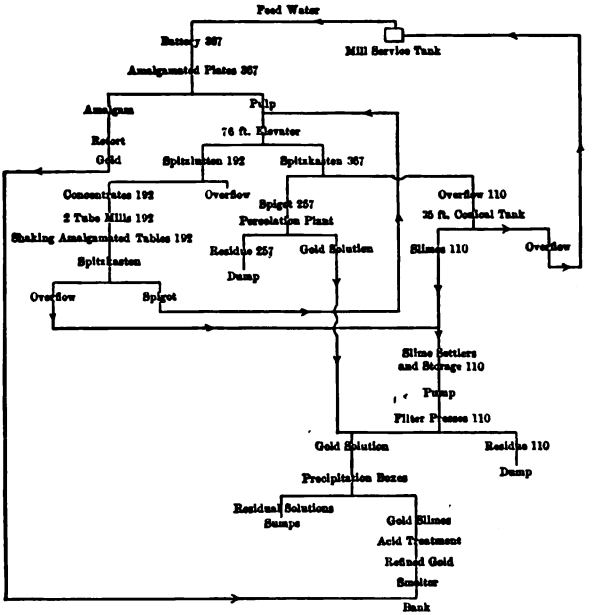

FIG. 849. — PULP FLOW DIAGRAM MILL 108.

The numbers in both diagrams refer to tonnages. The only losses are in sand and slimes residues and these are water losses. Including evaporation which amounts to 8.7 gallons, the consumption of water is under 40 gallons per ton of ore handled.

§ 1439. MILL NO. 109. MILL OF THE ROBINSON DEEP GOLD MINING COMPANY, LIMITED, OF THE CONSOLIDATED GOLD FIELDS OF SOUTH AFRICA, LIMITED. — The mine [28] of this company is situated in the Witwatersrand District and the mill is handling the typical conglomerate rock of the region. For the year ending August 31, 1907, 519,475 tons of rock were stamped.[73] This gives a daily capacity of 1,423 tons reckoning 365 days to the year. Although the mill contains 300 stamps they were not all operated continuously; and, figuring 24 hours per day and 365 days to the year, only 281.1 stamps were in operation.

The recovery of values in this mill is very high, 94.9% recovery being obtained for 1907. This is more than 2 points above the highest percent recovery effected in any other large South African mill. The yield per ton for the 519,475 tons treated was $9.83 and the cost for mining and milling was $5.31 per ton, leaving a profit of $4.52 per ton. The general grade of ore mined is much

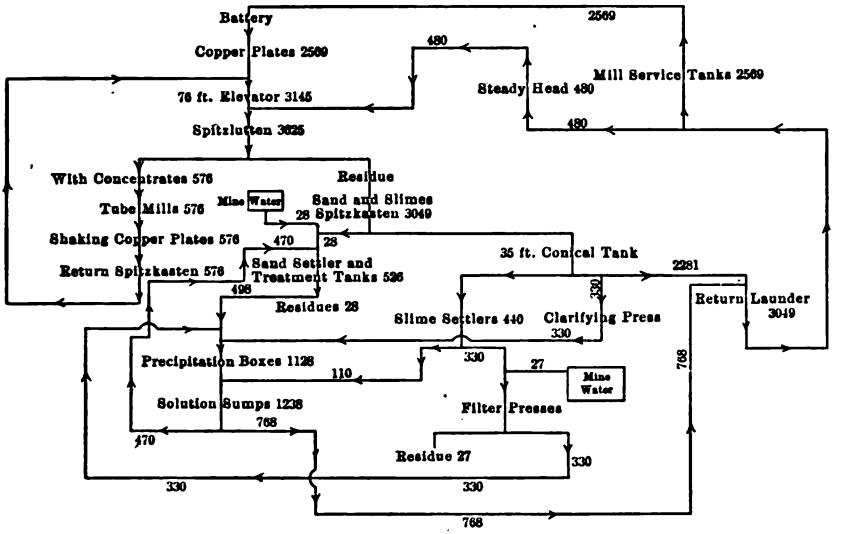

FIG. 850. — SOLUTION FLOW DIAGRAM MILL 108.

higher than in any other of the large mines of the district; and, in consequence, the Robinson Deep is the largest gold producer in South Africa. During the quarter ending September 30, 1907, 103,525 tons of ore were milled, yielding a gold recovery of $1,718,522. The cost of mining and milling during this period was $4.05 per ton as compared with $5.31 as the average cost for the preceding four quarters.

Rock Houses.

Ore from the mine is dumped to (1).

1. Grizzly. From mine; delivers oversize to (2) and undersize to (3).

2. Two No. 6 Gates breakers. From (1); deliver crushed ore to (3).

3. Sorting table, 25 feet in diameter. From (2); delivers washed ore to (5), hand-picked waste rock to dump, and wash water to (4).

4. Four wooden settling-boxes. From (3); deliver overflows to (11) and settled sands to (13).

5. Conveyor belt. From (3); delivers to (6). There are two similar rock houses as above, delivering ore to the common hopper (6).

6. Hopper, receiving ore from both rock houses and delivering to (7).

7. Conveyor belt. From (6); delivers to (8).

8. Three hundred stamps. From (7); deliver pulp to (9) and battery residues to (10). There are 200 1,250-pound stamps having timber foundations and 100 1,550-pound stamps having cast-iron anvil blocks with timber packing resting on concrete foundations.

9. Amalgamating plates. From (8); deliver amalgam to (10) and pulp to (11).

10. Clean-up room containing two mechanical bateas, 4 feet in diameter;

three amalgam barrels; one retort; and two bullion furnaces. From (8), (9), and (14); delivers bullion to bank.

11. Two sand wheels, 42 feet in diameter. From (4) and (9); deliver to (12).

12. Spitzlutten, four pyramidal boxes, 3.5 × 4 × 3 feet; six pyramidal boxes, 3.5 × 3 × 3 feet and eight pyramidal boxes, 3.5 × 2 × 3 feet, arranged in six rows of three each. From (11); deliver spigots to (13) and overflows to (15).

13. Two tube mills, 5 feet in diameter and 22 feet long. From (4) and (12); deliver pulp to (14).

14. Twelve shaking amalgamating tables, four, 4.75 × 12 feet, and eight, 4.75 × 6 feet. From (13); deliver amalgam to (10) and pulp to (11).

15. Spitzkasten, eight pyramidal boxes, 6 × 7 × 4.67 feet. From (12); deliver overflows to (16) and spigots to (19).

16. Slimes collecting plant containing six conical-bottomed slimes tanks, 50 feet in diameter and from 12 to 16 feet deep; two 8-inch centrifugal sludge pumps; one 6-inch centrifugal decanting pump; and one 6-inch Sulzer high-lift pump. Vats receive from (15), (20), and (24); deliver overflows to (17) and sludge, via pipe, to (18).

17. Two steel conical-bottomed return-water tanks, 50 feet in diameter and from 12 to 16 feet deep. From (16); deliver, via pump, to either (18) or (26).

18. Steel slimes-treatment vats. There are six conical-bottom vats, 50 feet in diameter and from 10 to 14 feet deep, two conical-bottom vats, 50 feet in diameter and from 16 to 20 feet deep, four conical-bottom tanks, 50 feet in diameter and from 12 to 16 feet deep, and eight inclined-bottom tanks, 40 feet in diameter and from 8.5 to 12.5 feet deep. Receive sludge from (16), water for discharging from (17) and solution from (24); deliver decanted first wash solution to (22), decanted second wash solution to (24), and slimes residue to dam. The sludge and solutions are handled by four 8-inch centrifugal sludge pumps and two 5-inch centrifugal decanting pumps located in two pump houses.

19. Ten steel collecting-vats, 40 feet in diameter and 8 feet deep, having bottom discharges. The tanks are hose filled. From (15) and (20); deliver discharges, via conveyor belts, to (21) and overflows to (20).

20. Return-sand Spitzkasten, six pyramidal boxes, each 6.5 × 6 × 5.25 feet. From (19); deliver spigots, via pump, to (19) and overflows to (16).

21. Twenty-eight steel sand-leaching vats equipped with Blaisdell aerators and bottom discharges. There are fourteen top vats, 40 feet in diameter and 8 feet deep, and fourteen bottom vats, 40 feet in diameter, and 9 feet deep. Receive sand from (19) and solution from (24); deliver gold-bearing solution, via distributing launders, to (23) and sand residues, by mechanical haulage system, to dump.

22. Slimes filter vats. Two steel vats, 25 feet in diameter and 4 feet deep; and three wooden vats, 15 feet in diameter and 4 feet deep. From (18); deliver filtered slimes solution to (23) and residual slimes to slimes dam.

23. Eighteen zinc-extractor boxes. Two steel boxes with a zinc capacity of 258 cubic feet each, eight steel boxes with a zinc capacity of 242 cubic feet each, and eight wooden boxes with a zinc capacity of 605 cubic feet each. From (21) and (22); deliver zinc slimes and precipitated gold, via bisulphate clean-up plant, to (25) and residual solution to (24).

24. Sumps. There are five steel vats, 40 feet in diameter and 8 feet deep, for solutions, and one wooden vat, 30 feet in diameter and 12 feet deep, for acid washings. The solution vats receive from (18) and (23) and deliver, via pumps, to (16), (18), and (21).

25. Refinery containing one calcining furnace, one reverberatory furnace, one pan furnace, one cupel furnace, and two bullion furnaces. From (23); delivers bullion to bank.

26. Two mill-water service tanks, 45 feet in diameter and 12 feet deep. Receive make-up water from slimes dam and weak solution, via pump, from (17); deliver to (8).

§ 1440. MILL NO. 110. ORE REDUCTION PLANT OF THE SIMMER DEEP, LIMITED, OF THE CONSOLIDATED GOLD FIELDS OF SOUTH AFRICA, LIMITED. — The ore [28] treated is the typical conglomerate rock of the district and the problem is to save the gold.

In the mill, the bin framing and roof trusses are of steel. Power is furnished by electricity, each battery of 10 stamps being driven by a separate motor. The capacity is 72,000 tons of ore per month.[73]

From mill bin the ore goes to (1).

1. Four hundred stamps. From mill bins; deliver pulp to (2) and battery residues to (3). In the foundations for the stamp mortars, cast-iron anvil blocks have been done away with, and the mortar boxes rest directly on concrete. The stamps weigh 1,670 pounds and as the shoes wear down compensating weights are added and the stamps are never allowed to get below a minimum weight of 1,600 pounds. The battery water is a weak cyanide solution supplied from (19).

2. Amalgamating plates. From (1); deliver amalgam to (3) and pulp to (4).

3. Clean-up room. From (1), (2), and (5); delivers bullion to bank. Contains 4 amalgamating barrels, 2 mechanical bateas, 2 retorts, and 3 bullion furnaces.

4. Two sand wheels, 48 feet in diameter. From (2); deliver to (5).

5. Spitzlutten. From (4); deliver spigots to (6) and overflows to (8). Thirty-six pyramidal boxes, 3.5 × 2 × 3 feet, divided into four sets of nine boxes each to which the pulp is conducted in four streams. Each set is three boxes wide and the pulp stream is further subdivided into three streams so that each portion flows over three boxes successively, across the long dimension of each. A by-pass is provided by means of which the pulp current may be deflected directly from (4) to (8).

6. Four tube mills, 5.5 feet in diameter and 22 feet long. From (5); deliver pulp to (7).

7. Twenty shaking amalgamating tables. From (6); deliver amalgam to (3) and overflow to (4). Each table is 5 feet wide and 12 feet long. Five tables are fed by the discharge of each tube mill.

8. Spitzkasten. From (4) or (5); deliver spigots to (11) and overflows to (9). Fourteen pyramidal boxes, 6 × 7 × 4.67 feet, arranged in seven pairs. The overflows from (5) or pulp from (4) are divided, in a distributing box, into seven streams, each of which flows through two boxes successively.

9. Decantation slimes plant containing sixteen conical-bottom steel vats, 70 feet in diameter and 12 × 17.5 feet deep, together with three 12-inch sludge pumps. The vats receive slimes in the overflows from (8) and (15), strong cyanide solution from (11), solution from which the gold has been precipitated from (18) via (11), and water for discharging which has been returned, via (18), from slimes residue dam. The vats deliver overflows to (10), first decanted wash solution to (11), (12) or (18), and sludge to slimes dump.

10. Two conical-bottom steel return-water tanks. From (9); deliver, via pump, to (19). The tanks are 70 feet in diameter and from 12 to 17.5 feet deep.

11. Two conical-bottom steel solution-vats, 70 feet in diameter and from

12 to 17.5 feet deep. The vats receive the surplus strong sand solution from (16) together with residual solution from precipitating boxes (17) and decanted second wash slimes solution from (9). The vats deliver to (9).

12. Slimes filter vats, four steel vats 40 feet in diameter and 4 feet deep. Receive decanted first wash solution or decanted second wash solution, both from (9). Deliver slimes to slimes dump and filtered solution to (17).

13. Sand wheel, 32 feet in diameter. From (8) and (15); delivers to (14).

14. Sand-collecting vats. From (13); deliver overflows to (15) and sands, via conveyor belts, to (16). There are twelve steel vats, 50 feet in diameter and 8.5 feet deep, filled by a Butters' distributer and having bottom discharges.

15. Return-sand Spitzkasten. From (14); deliver spigots to (13) and overflows to (9). There are eight pyramidal boxes, each 6.5 × 6 × 5.25 feet.

16. Sand-leaching vats. From (14); deliver sand discharges to sand dump via cars, and gold solution to (17) via distributing launders. There are twenty-four steel vats, 50 feet in diameter and 10 feet deep. The vats have bottom discharges.

17. Twenty zinc-extractor boxes. From (12) and (16); deliver zinc slimes with precipitated gold, via bisulphate clean-up plant, to (20) and residual solution to (18).

18. Sumps consisting of seven steel vats, 50 feet in diameter and 8 feet deep, for solutions, and two wooden tanks, 25 feet in diameter and 12 feet deep, for acid washings of the bisulphate clean-up plant. Receive decanted second wash-water slimes solution from (9), residual solution from (17), and solution returned from the slimes residue dam. Deliver to (11).

19. Three mill-water steel service tanks, 50 feet in diameter and 12 feet deep. From (10) and water main from dam; deliver to (1).

20. Refinery, containing 1 calcining furnace, 1 reverberatory furnace, 2 pan furnaces, 2 cupel furnaces, and 3 bullion furnaces. Handles the precipitate from the bisulphate plant and delivers bullion to bank.

B. 6. Amalgamation Followed by Concentration.

Dredge 111 and Mills 112, 113, 114, and 115 are given as examples of this method of saving the values in five districts.

§ 1441. Dredging. — There are five kinds [87] of gravel mining:

First. Ordinary hydraulic mining requiring water under pressure, easily removable gravel, and room for dumping the washed gravel.

Second. There are layers of gold-bearing gravel capped with a lava flow, or other material, of such great thickness that only underground or drift mining is possible.

Third. There are bars along the rivers resting on a hard bedrock, which cannot be worked by dredges because the bedrock is so hard; or which must be worked by hydraulic elevators on account of the lack of adequate dumping facilities. Yet in this case it must be understood that even hydraulic elevators are of little or no value if there is an excess depth of water, and again they have a very low efficiency.

Fourth. There are large tracts of gravel in dry areas which are neither deep nor covered with lava and, therefore, afford good opportunities for the use of steam shovels. The usual objection to steam shovels, that the great rush of water out of the bottom of the dipper carries back much of the gold, is in this case removed, since the gravel may be shoveled dry from the banks.

Fifth. There is the gravel, with an excess depth of water, resting on a soft, fairly level bedrock, and preferably containing very few large boulders, which can be worked only with dredges.

From the above it will be deduced that a dredge is applicable only under certain special conditions. The necessity of a soft bedrock is due to the fact that the gold often lies very near it and, moreover, by the necessary agitation of the gravel during the process of dredging, some of the gold escapes to the friable bedrock and it often becomes necessary to dredge into the bedrock itself for a short distance, as the gold in it can only be removed by the application of a jet of water. Not infrequently the friable bedrock is gold bearing near its contact with the gravel. For these reasons a bedrock which cannot be removed by the dredge may be fatal to success. Generally speaking gravel and bedrock which can be loosened with a pick may be dredged; but dredging has been successfully performed where some blasting was required, although blasting adds from two to three cents per cubic yard to the costs.

By a dredge is meant the continuous-chain bucket type as distinguished from dippers, clam-shells, etc. The two leading dredges [87 165] are those of the Bucyrus Company [151] and the Risdon Iron Works.[88] Cuts of the former are given in Ore Dressing, Vol. II., pages 1010 and 1011, and since the dredges are so nearly alike the main difference will be pointed out without the aid of another illustration. The chief differences between the two are in the buckets, guy wires, and spuds. The Bucyrus bucket consists of a heavy cast-steel base to which is riveted the back and wearing lip; while the Risdon is of the built-up type and appears to be the more economical of the two because of the difference in repair costs. The Risdon dredge is moved by means of four guy wires at the corners of the hull; and held against the bank by a fifth, or head line. The Bucyrus is provided with a steel spud at the rear end, which prevents the dredge from backing away from the bank; and an additional wooden spud is provided to use instead of the steel spud, when "walking" the dredge about by means of the four guy wires at the corners of the hull. Where the surface of the ground being dredged is level, there is difference of opinion respecting these two methods; but with an uneven surface, or in hard or deep gravel, the spuds are preferable. Most of the operators at Oroville, California, equip their dredges with both, but use the head-line only in emergencies. The Risdon dredge [165] employs a revolving screen or trommel, and the Bucyrus, a shaking screen; but both makers supply either. A revolving screen is preferable [87] with ores containing clay, because the sticky gravel and clay may be more perfectly washed free of gold, due to the constant tumbling of small boulders onto the clay balls and the constant exposure of new surfaces to the free action of jets of water. Where a shaking screen can be used, it is employed, because its first cost and later repairs are both cheaper, since it makes a more efficient use of its screen surface, it has a greater capacity per unit of screen cloth, and it distributes the gravel more evenly to the tables. For elevating and stacking the tailings both the conveying belt and chain of buckets are used. The former, used on all other than Risdon dredges, is less expensive in first cost and more quickly repaired; but the latter, used on Risdon dredges, will run for a longer time without necessitating a shut-down. There is a difference of opinion on the question of which of the two methods is the cheaper in the long run. The belt runs at a maximum grade [87] of 20°; but the chain buckets are usually run at 35°. Centrifugal stackers have been used successfully in New Zealand, but there are none in this country. They have the advantages of smaller first cost, less weight, and the same efficiency. Of the gold-saving appliances, cocoa matting and expanded metal, or iron mesh, are commonly used [87 88] by the Risdon dredges; while the Bucyrus Company prefers [87 151] riffles and quicksilver. Both builders, however, supply either. The riffles and mercury will save more fine gold than the matting and expanded metal if the gold is amalgamable, and consequently are, in the majority of cases,

preferred.[165] In this connection it should be stated that arsenic in the gold will prevent its amalgamation. Where platinum is to be saved, or the gold is coarse or "rusty" and will not amalgamate, the matting or plush with the expanded metal must be used.

Dredges are built by the Bucyrus Company with a bucket on every link, called "close connected," and by the Risdon Company with a link between each bucket called "open connected." The former with less speed will dig more gravel if it is loose; while in hard ground the question of the greater capacity has not been settled. Where there are large boulders the "open-connected" type must be used or the backs of the buckets will become jammed and broken. The speed attained is from 18 to 25 buckets per minute by the "close-connected" type and from 12 to 15 buckets by the "open-connected" type. The capacity of buckets varies from 1.25 to 13 cubic feet of loose gravel; they usually carry from 3 to 5 cubic feet. A dredge is rated according to the capacity of its buckets and those rated at from 3 to 5 cubic feet will handle from 15,000 to 85,000 cubic yards (bank measurement) per month. The hull length of a 3 to 5-foot dredge [87] runs from 70 to 110 feet, the width from 27 to 40 feet, the draught from 3 to 5 feet, and the horse-power consumed varies between 40 and 150.

The total cost of dredge and equipment, in the case of a 3 to 5-foot dredge, is from $30,000 to $250,000. The crew consists of 1 foreman at $5 per day, 3 winchmen at $3 to $3.50 per 8 hours, 3 oilers at $2 to $2.50 per 8 hours, 1 blacksmith at $3.50 for 10 hours, 1 blacksmith helper at $2 to $2.50 for 10 hours, and 2 Chinese roustabouts at $1.75 to $2.50 per day — a total labor cost of $29 to $34 per day besides the superintendent's salary which is usually divided up between several dredges.

The cost of operating depends [87] upon: (1) The cost of power. (2) The rate of wages. (3) The number of dredges under one management. (4) Whether or not a company has its own machine shop, as repairs are one of the chief factors. (5) The hardness of the ground. (6) The size of the buckets, for the crew required for a small dredge is about the same as for a large one. (7) Whether the buckets are "open" or "close" connected. (8) Whether a belt or bucket stacker is used. (9) Whether a revolving or shaking screen is employed. (10) Whether a sand pump is used to elevate the fine tailings; this requires considerable power and is not done unless necessary to keep the waste gravel from interfering with the movements of the dredge. (11) The age of the dredge, for it is a machine which depreciates very rapidly.

The position of the bedrock, as well as its hardness, must be predetermined, as a dredge will only work down to 70 feet below the water line and much more economically at from 30 to 60 feet below the water level. The dredge diggers will also handle a bank 20 feet above the water line; but they do the most efficient work when operating at an angle of 45°. Prospecting is carried on by shaft sinking; or, more usually, by drilling holes at regular intervals with a churn drill, of which the Keystone No. 3 traction drill is a representative. The gravel removed from the shaft or drill hole is panned or rocked, by which means an estimate is obtained of the amount of gold a dredge will save.

The total cost [87] of operation varies between 3.0 and 10.0 cents per cubic yard (bank measurement) excavated, and the average California figure is between 6.5 and 8.5 cents, made up as follows: General expenses, including taxes and the cost of prospecting, 16.0%; labor, including superintendence, 30.6%; electric power, 14.9%; tools, etc., 4.1%; repair parts, 30.1%; and sundry expenses, 4.3%.

§ 1442. MILL NO. 111. METHOD OF RECOVERING GOLD FROM BLACK SAND, AS ILLUSTRATED BY THE PLANT OF THE GOLD BLUFF MINING CO., ORICK, CALI-

FORNIA. — This plant,[96] consisting of a 40 × 80 foot dredge of the clam-shell dipper type, and a floating wash house, 28 × 60 feet, is working on the ocean beach at Gold Bluff, California.

The material handled is ordinary beach sand, consisting principally of quartz, but containing from 1 to 2% of the heavy black sand minerals (magnetite, ilmenite, and chromite), about 0.5% of garnet or ruby sand, 0.5% of zircon, and from 5 to 10% of light pyroxene silicates. The gold content of the sand varies considerably, but averages about 37 cents per cubic yard or 25 cents per ton. The values occur in very fine flaky particles, 95% of which will pass through a 60-mesh sieve. Some of the colors are microscopic. Only about 20% of the gold will amalgamate because of the presence of animal and vegetable greases with which it has come in contact. In purity the gold ranges from 940 to 960 parts fine. Platinum metals are also present in minute quantities.

The dredge has an excavating capacity of 2,500 tons per 24 hours, but as the washing plant can handle only 1,200 tons in the same time, the dredge is never run to its full capacity.

The original sand in the beach goes to (1).

1. Dredge dipper of the clam-shell type with a capacity of 3 cubic yards or 4.5 tons. Delivers sand to (2).

2. Feed hopper with a capacity of 25 tons. This hopper is in the form of an inverted pyramid, 12 feet square and 6 feet deep. It is supported from the dredge by a steel and timber construction which leans at an angle of about 20°, holding the hopper directly over the center of the front end of the wash house. This method of support is adopted in order that the varying weight of sand contained shall not disturb the level of the wash house and thus interfere with the proper working of the washing apparatus. The upper edge of the hopper is 38 feet above the water level. Inside the hopper, and 4 feet from the top, there is a coarse grizzly made of stout iron bars having openings 1.5 × 0.75 feet. This is for the purpose of catching pieces of wood, of which there is a great deal in the beach, and thus preventing the same from clogging up the discharge.

A stream of water from an 8-inch pipe under a 3-foot head, playing directly beneath the grizzly, carries the material out of the hopper. From (2); delivers to (3).

3. Grizzly, 2 feet long and 1.5 feet wide, constructed of iron bars 0.5 inch thick and 1 inch deep. Space between the bars is 1.25 inches at the head of the grizzly and 1.5 inches at the foot. Slope is 30°. From (2); delivers oversize, via rock chute, to dump and undersize to (4).

4. Shaking screen, 2 × 2 feet. Screen is of iron-wire cloth, 1 mesh with a wire 0.1875 inch in diameter, net width of hole 0.8125 inch. Slope of the screen is 15° and it makes 40 throws per minute. From (3); delivers oversize, via rock chute, to dump, and undersize to (5). A spray of water washes the oversize clean. The oversize on this screen, together with that on (3), amounts to about 10% of the original material.

5. Two concentric cylindrical trommels, 6 feet long and 3 and 4 feet in diameter, slopes of 1.5 inches to the foot, and making 16 revolutions per minute. The screens are of iron-wire cloth, the inner one being 0.375 inch wide and the outer one 0.1875 inch wide. Spray water is introduced from both top and sides. The oversize amounts to about 15% of the original material. From (4); delivers oversize on both screens, via rock chute, to dump, and undersize to (6).

6. Distributor, dividing the sand into 28 equal portions. From (5); delivers, via launders, to (7).

7. Thirty cocoa-matting tables, 3 feet wide, 15 feet long, and sloping 1.5

inches to the foot. Each table is provided with a head-box and mercury trap used to retain any amalgam or quicksilver which may enter in the feed. The presence of this quicksilver in the material is due to the fact that tons of mercury were lost when the beach was first worked by hand methods. Tom-heads, 4 feet long and spreading to the width of the table, distribute the sand evenly to the cocoa matting. The feed is so arranged that 28 tables are receiving pulp while 2 are being washed down. This washing down is done in a continuous round, the concentrates from each table being hosed off about every 25 minutes. From (6); deliver tailings, via tailings sluice, to dump, and concentrates to (8).

8. Rough concentrates box, capacity 5 tons. From (7); delivers to (9).

9. Bucket elevator with rubber belt and cast-iron buckets. Elevates to a vertical height of 8 feet. From (8); delivers to (10).

10. No. 5 Wilfley table making 240 strokes per minute. Length of stroke 0.875 inch. From (9); delivers black sand concentrates to (11) and tailings, via launder, to waste.

11. Shaking silver-plated copper amalgamating plate attached to the concentrates end of the Wilfley table and sloping in the opposite direction. This plate is 10 inches wide and 3 feet long and is kept in good condition with weak cyanide solution and sodium amalgam. From (10); delivers amalgam to retort, and sand, via buckets on overhead crawl tram, to (12).

12. Clean-up barrel, 5 feet long, 3 feet in diameter, making 12 revolutions per minute. Three hundred and fifty to 500 pounds of material are fed in one charge with enough water to give a rather thick pulp, 0.25 pound of caustic potash, and from 7 to 10 pounds of mercury are added. Six to 8 iron balls, weighing 5 to 6 pounds each, are used in the barrel. The charge is treated for 20 minutes. From (11); delivers to (13).

13. Bin having a capacity of 1 ton. From (12); delivers to (14).

14. Bucket elevator having rubber belt and cast-iron buckets. Elevates to a vertical height of 8 feet. From (13); delivers to (15).

15. One 2-inch hydraulic classifier. From (14); delivers spigot of mercury and amalgam to retort, and overflow to (16). This classifier is run with a closed spigot consisting of an acid carboy.

16. Silver-plated copper amalgamating-plate, 18 inches wide and 4 feet long. This plate catches most of the floured quicksilver and fine amalgam in the overflow of the classifier. The plate sweats, but the amalgam and quicksilver are caught in a double set of mercury traps located below the plate. From (15); delivers amalgam to retort, and sand to (17).

17. No. 5 Wilfley table making 240 strokes per minute. Length of stroke, 0.875 inch. From (16); delivers concentrates (the first inch of the concentrates fan) to bin and thence to smelter, and tailings to waste.

A Babcock and Wilcox water-tube boiler of 250 horse-power furnishes steam, under 120 pounds pressure, to the following machines:

Two direct-connected 60 horse-power Atlas engines which raise and lower the dipper; a 10 horse-power engine used to swing the dipper horizontally; a 35 horse-power Atlas engine used to run a 10-inch centrifugal pump which furnishes the total water supply for the plant. This engine also runs the clean-up barrel; an 18 horse-power vertical engine used to run 2 elevators and 2 Wilfley tables; an 8 horse-power high-speed vertical engine used to run a 3.5-kilowatt direct-current generator which supplies the lights; steam pump for boiler feed, syphons, etc.

The boilers burn 3 cords of wood in 10 hours, costing $2.50 per cord.

The plant is operated during a day shift of 10 hours, but is prepared to operate nights as well. Ten men are employed as follows: 1 general foreman; 1 engineer and blacksmith; 1 fireman; 1 lever-man; 1 man to tend large feed

hopper, grizzly, and screens; 1 boy on the divider; 2 men washing cocoa-matting tables; 1 man tending clean-up barrel and Wilfley tables; and 1 roustabout. Average wages are $2.50 per day.

The washing plant handles 400 tons of original material in 8 hours and this amount of material is therefore taken as the unit. Data showing the approximate concentration and extraction on this basis are given below:

400 tons of original sand at 25 cents	$100.00
100 tons removed by grizzly, screen, and trommels, losing perhaps (waste)	0.10
300 tons feed to cocoa-matting tables at 33⅓ cents	99.90
285 tons of tailings from cocoa-matting tables at 14 cents (waste)	39.90
15 tons rough concentrates from cocoa-matting tables at $4	60.00
12 tons of tailings from first Wilfley tables at 25 cents (waste)	3.00
3 tons of concentrates from first Wilfley at $19	57.00
Amalgam on first amalgamating plate (saved)	*15.00
3 tons first plate tailings at $14	42.00
Spigots of hydraulic classifier yields (saved)	*33.00
3 tons overflow from classifier at $3	9.00
Amalgam from second amalgamating plate and traps (saved)	*3.00
3 tons of tailings from second amalgamating plate at $2	6.00
10 pounds of concentrates from second Wilfley table at 50 cents (saved)	*5.00
3 tons of tailings from second Wilfley table at 33⅓ cents (waste)	1.00

Out of a total loss of 44%, 39.9% occurs in the tailings from the cocoa-matting tables. Only 4% of the total value is lost by the entire process once the sand gets to the first Wilfley table; and of the $60 in the feed to this table, $56 or 93.33% is recovered.

This high extraction shows the efficient work of the Wilfley tables. The very poor work of the cocoa-matting tables is partly due, in this particular plant, to the fact that they are not washed down often enough. The interstices in the matting become completely filled with heavy or coarse sands in about 15 minutes, but the tables are washed once every 25 minutes and sometimes they are under feed for over half an hour. During the latter 10 or 15 minutes, therefore, the sand simply goes to waste and only a very small percentage of the gold is saved. The speed of washing cannot be increased because of the design of the plant. Finer screening would, however, aid to reduce the loss, as it would not only lessen the feed by the amount removed in the oversize, but would also entirely remove the coarser particles of silica which stop on the matting table with the black sand. But even when these losses are taken into account, the cocoa-matting table (including burlap, carpet, blanket, expanded metal, canvas, etc., all of which have been tried at this plant) is still not an efficient apparatus for saving fine-gold values. There are many inherent difficulties in the tables themselves, and as fine-gold savers they lack principle and design, are inefficient and unscientific.

§ 1443. MILL NO. 112. THE CENTRAL MILL OF THE TWELVE APOSTLES MINE, GURABÁRZA, TRANSYLVANIA, HUNGARY. — The economic mineral is gold, which occurs both in a free state and mechanically combined with metallic sulphides.[17] The gangue rock is of volcanic origin and consists of trachyte, porphyry, greenstone, etc. Good ore is distinguished from poor, by panning tests for free gold. This method is satisfactory, as it has been found that

* Total saving is $56 corresponding to an extraction of 56 percent.

where little free gold occurs there is also very little gold contained in the sulphides. Moreover, panning tests are necessary as the actual gold content of the rock varies within wide limits. Very rich ores are kept separate and are worked up by hand, by crushing and amalgamating in large iron mortars. The mill has an average capacity of 465 tons of ore per 24 hours.

Ore from the mine is hauled in cars of about 0.7 ton capacity to the upper floor of the rock house and dumped, by means of a tipple, to (1). Thirty to thirty-five of these mine cars are handled in one train. The motive power is supplied by a Siemens and Halske electric locomotive, model 99.

Rock House.

1. Grizzly with 60-millimeter spaces between the bars. From the mine; delivers oversize to (2) and undersize to (3).

2. Goliath rock breaker. From (1); delivers crushed ore to (3). Set to break to between 30 and 60 millimeters.

3. Storage bins. From (1) and (2); deliver to (4). Bins have a capacity of 200 tons. Ore from different workings is kept separate.

Aerial Tram.

4. Bleichert Aerial tram. From (3); delivers to (5).

Mill.

5. Mill bins. From (4); deliver to (6).

6. Automatic Challenge feeders. From (5); deliver to (7).

7. One hundred and ninety California gravity stamps. From (6); deliver pulp to (8) and amalgam, from bi-monthly clean-ups of the battery residues, to retort. The stamps are arranged in eighteen separate sections. Twelve sections, each consisting of two 5-stamp batteries, have stamps weighing 770 pounds each. Four sections, each consisting of three 5-stamp batteries, have stamps weighing 376 pounds each. Two sections, used for experimental purposes, each have one 5-stamp battery with stamps weighing 376 pounds each. Of the total 190 stamps, 120 weigh 770 pounds each, and 70 weigh 376 pounds each. Pulp is stamped through a 30-mesh wire cloth screen having 0.3-millimeter openings. The heavy stamps have a capacity of 2.5 to 3.5 tons per 24 hours, and the lighter stamps crush from 1.2 to 1.8 tons in the same interval. The stamps drop 90 times a minute through a distance of 120 to 160 millimeters. The batteries are provided with inside silver-plated copper plates which are cleaned up every two weeks.

8. Amalgamating plates. From (7); deliver pulp to (9) and amalgam, at bi-monthly clean-up, to retort. There are three silver-plated copper plates to each battery. They are placed in step fashion one after the other.

9. Mercury traps. From (8); deliver amalgam, at monthly clean-up, to retort and pulp to (10).

10. Two hundred small canvas tables arranged in two sections. From (9) through the medium of a general launder. Boys hose off these tables from time to time, washing the concentrates into rectangular wooden boxes which are dumped, by hand, into tram cars which carry them to (11). Tailings go to (16). The tables are 1.5 meters long and 0.5 meter wide.

11. Bin in pan-amalgamating room. From (10); delivers to (12).

12. Six amalgamating pans, 1.2 meters in diameter. These pans have a capacity of 500 to 600 kilograms and work up a charge in about 2 hours. From (11); deliver both amalgam and pulp to (13).

13. Three settling pans, 2 meters in diameter and 1.3 meters deep. From (12); deliver concentrates to (14) and overflows to (16).

14. Bin. From (13); delivers to (15).

15. Six wash trommels, 3 meters long and 0.75 meter in diameter. From (14); deliver amalgam to retort, concentrates to (22), and washings to (16). The trommels serve simply for washing the amalgam and concentrates, and cleaning both products.

The pan-amalgamation system serves more than anything else as a check on the work done by the plates, and is to be done away with in the near future to make room for more stamp batteries.

The gold obtained from retorting amalgam is about 700 parts fine.

Slimes Plant.

16. Two sand wheels. From (10), (13), and (15); deliver to (17).

17. Two series of Spitzkasten. From (16); deliver spigots of coarse material to (18), 8 grades of finer material to (19), and finest material as overflows to (20).

18. Ferraris concentrating tables. From (17); deliver two grades of concentrates to (22), middlings to (16), and tailings to (21). Besides a feed from (17), these tables receive additional pulp from another plant located at Ruda. At this latter plant the ore, originally low in pyrite, in passing through 200 meters of sluice, is subjected to a natural concentration and, when shoveled into carts, contains about 30% of sulphides. This material is brought to the plant at Gurabárza and fed directly to the Ferraris tables.

19. Eight double Bilharz tables. From (17); deliver concentrates to (22) and tailings to (21). The ore receives two treatments on each table.

20. Two tables. From (17); deliver concentrates to (22) and tailings to (21).

21. System of settling boxes. From (18), (19), and (20); deliver clean water to mill system, and settlings to waste. The tailings carry from 0.5 to 1.5 grams or 0.0173 to 0.0519 ounce of gold per ton and this loss represents from 12 to 20% of the total gold content of the ore.

22. Smelters located in Schemnitz and Zalatna. The concentrates run from 65 to 70% sulphides.

Power is furnished the mill by four Root water-tube boilers with superheaters supplying steam at 150 pounds pressure to a 550 horse-power compound engine. This engine operates dynamos which, by suitable transmission lines, supply power to such places in the mill as need it.

§ 1444. MILL NO. 113. MILL OF THE CAPITAL MINING AND TUNNEL COMPANY, GEORGETOWN, COLORADO.[177] — The capacity of this plant is about 175 tons per 24 hours.[43] The economic minerals are gold, and argentiferous chalcopyrite, galena, sphalerite, and pyrite in a gangue made up of some hard quartz, and the balance soft decomposed feldspar. Some high-grade smelting ore is hand picked and shipped crude. The problem is to save the economic minerals.

Ore from the mine is delivered to (1).

1. Grizzly with 1-inch spaces between the bars. From the mine; delivers oversize to (2) and undersize to (6).

2. Receiving bin. From (1); delivers to (3).

3. Blake breaker with a 9 × 15-inch jaw opening. From (2); delivers crushed ore to (4).

4. Conveyor screen. From (3); delivers oversize to (5) and undersize to (6).

5. Samson breaker with a 7 × 16-inch jaw opening. From (4); delivers crushed ore to (6).

6. Elevator. From (1), (4), and (5); delivers to (7).
7. Sampler. From (6); delivers sample to assayer, and reject to (8).
8. Distributing bin. From (7); delivers to (9).
9. Plunger feeder. From (8); delivers to (10).
10. Two 6-foot Chili mills crushing through screens with 20 meshes to the inch. From (9); deliver pulp to (11).
11. Two amalgamating plates, 6 × 9 feet. From (10); deliver amalgam to retort, and pulp to (12).
12. Two distributors. From (11); deliver to (13).
13. Two 50-ton Pierce amalgamators. From (12); deliver amalgam to retort, and pulp to (14).
14. Two elevators. From (13); deliver to (15).
15. Two Bosco sizers with 5 spigots each. From (14); deliver spigots to (16) and overflows to waste.
16. Ten Card tables making 240 0.75-inch throws per minute. From (15); deliver galena concentrates to (23), iron-zinc concentrates to (22), middlings and slimes alternately to (17), and tailings to waste.
17. Three sand pumps. From (16); deliver to (18) or (19).
18. Two Callow settling tanks. From (17); deliver spigots to (20) and overflows to waste.
19. Callow settling tank. From (17); delivers spigot to (21) and overflow to waste.
20. Two Card tables set quite flat. From (18); deliver galena concentrates to (23), iron-zinc concentrates to (22), and tailings to waste.
21. Two Card tables. From (19); deliver galena concentrates to (23), iron-zinc concentrates to (22), and tailings to waste.
22. Three iron-zinc distributing boxes. From (16), (20), and (21); deliver to (24).
23. Three galena distributing boxes. From (16), (20), and (21); deliver to (25).
24. Six Bosco drainage boxes for iron-zinc concentrates. From (22); deliver concentrates to (28) and drainings to (26).
25. Six Bosco drainage boxes for galena concentrates. From (23); deliver concentrates to (28) and drainings to (27).
26. Bosco settling launders for iron-zinc settlings. From (24); deliver settlings, periodically, to (28) and pulp to waste.
27. Bosco settling launders for galena settlings. From (25); deliver settlings, periodically, to (28) and pulp to waste.
28. Four shipping bins. From (24), (25), (26), and (27); deliver, via cars, to smelter.

The crude ore carries about $6 in gold and silver values, mostly gold. About 85% of this is recovered.

§ 1445. MILL NO. 114. "THE 60 MILL" OF THE TOMBOY GOLD MINES COMPANY, LIMITED, TELLURIDE, COLORADO.[96] — This mill,[53] located in Savage Basin about five miles from Telluride, has a capacity of 300 tons per 24 hours.

Practically all the ore, now milled, comes from the Argentine vein which is from 8 to 16 feet wide, and assays between $8 and $15 per ton, averaging about $10.[52] [136] It is a gold and silver-bearing quartz and sulphide ore of a character adapted for treatment by amalgamation and concentration.[14]

The problem is to save the gold, silver, galena, sphalerite, and pyrite.

The ore comes from the mine, via cars, and is delivered to (1).

1. Coarse grizzly, 12.25 feet long with 8-inch spaces between the bars, which have a slope of 24° and are made of T-rails, weighing 87 pounds per yard, set bottom up. From the mine; delivers oversize to (2) and undersize to (3).

2. Hand sorting and spalling. From (1); delivers waste to dump, and hand-broken ore to (4).

3. Small grizzly, 8 feet long with 1.5-inch spaces between the bars which have a slope of 38.5° and are wedge-shaped; 1.5 inches deep by 0.75 inch wide on top, and 0.375 inch wide on the bottom. From (1); delivers oversize to (4) and undersize to (5).

4. One No. 5, style "D," Gates breaker, breaking to 1.5 inches. Cone makes 150 gyrations per minute and breaks 25 tons per hour. Cast manganese-steel concaves are 3.25 inches thick and last 1 year, while cone mantles, of the same material, last 3 years. From (2) and (3); delivers crushed ore to (5).

5. Wooden bin and loading chute having a capacity of 4 tons, and a bottom sloping at 45°. From (3) and (4); delivers, via gravity, to (6).

6. One 14-inch Robins belt conveyor with a 6-ply belt having a conveying length of 140 feet, a speed of 350 feet per minute, and a life of 2.5 years. From (5); delivers to (7).

7. Wooden ore-bins having 300 tons capacity and bottoms sloping at 45°. From (6); deliver, via gravity, to (8).

8. Twelve Challenge feeders. From (7); deliver to (9).

9. Sixty stamps in 12 Allis-Chalmers No. 77 "G" straight-back, shallow-bottom mortars, weighing 3.4 tons each. The stamps weigh 1,050 pounds each, and make 100 drops per minute in the following orders: 1, 3, 5, 2, 4 and 5, 3, 1, 4, 2. The height of drop for numbers 1 and 5 is 7.5 inches; for numbers 2 and 4, 7 inches; and for number 3, which is the feed stamp, 6.5 inches. The height of discharge averages 3 inches and the capacity per stamp per calendar day, when crushing through a W. S. Tyler 20-mesh longitudinal-slot rolled-wire screen (horizontal wire number 28 and vertical wire somewhat coarser), was 4.689 tons as an average of 8 months running, or 5.22 tons per 24 hours of actual running time. From (8); deliver pulp to (10).

10. Twenty-four amalgamating plates, 5 × 8 feet, two in series with a 2-inch drop between them and made of silver-plated copper. There are also 12 lip plates 6 inches wide. From (9); deliver amalgam to (13) and pulp to (11).

11. Twelve Pierce amalgamators with 13 riffles each. From (10); deliver amalgam to (13) and pulp to (12).

12. Twelve pyramid quick traps. From (11); deliver amalgam and quicksilver to (13) and pulp to (15).

13. Clean-up room. From (10), (11), and (12). The amalgam and quicksilver is cleaned and squeezed, making quicksilver which is re-used and hard amalgam which goes to (14).

14. Two 10-inch cylindrical retorts. From (13); deliver quicksilver which is re-used and crude bullion which is refined into doré bars and sent to bank.

15. Three 12-inch elevators with 8-ply belts have speeds of 405 feet per minute, are supplied with sheet-steel buckets, 6 × 10 inches, and have a life of 10 months. They elevate 600 tons 25 feet per 24 hours. The belts have a life of 10 months. From (12); deliver to (16).

16. Three 24-inch Callow duplex traveling-belt screens[29] of 35 mesh, 31 wire, having speeds of 100 feet per minute, capacities of 100 tons per 24 hours, and a life of 4 months. From (15) and (21); deliver oversize, between 20 and 35 mesh, to (17) and undersize, through 35 mesh, to (22).

17. Three No. 5 Wilfley tables making 240 0.875-inch throws per minute. Each handles 27 tons per 24 hours and requires 8 gallons of wash water per minute. From (16); deliver lead concentrates to (32), middlings (Fe, Zn, SiO_2, and some Pb), to (18), head waters to (19), and tailings to creek.

18. One No. 5 Wilfley table with details as in (17). From (17); delivers

lead concentrates to (32), middlings (Fe, Zn) to (33), head water to (19), and tailings to creek.

19. One 2.5-inch Byron-Jackson horizontal centrifugal pump, making 1,375 revolutions per minute and handling 150 gallons of gritty water per minute against a head of 45 feet. Runners and liners last 4 months. From (17), (18), (24), (25), and (28); delivers to (20).

20. One 8-foot Callow pulp-thickening and settling tank. From (19); delivers thickened pulp, via siphon bottom discharge, to (31) and overflow to (21).

21. Wooden reservoir, 8 feet in diameter and 5 feet deep. From (20); delivers water for shaking sprays in (16) and (23).

22. Three 4-foot Callow sloughing-off tanks. From (16); deliver sand, via siphon bottom discharge, to (23) and overflow (mostly slimes) to (26).

23. Three 24-inch Callow duplex traveling-belt screens of 80 mesh, 38 wire, having speeds of 80 feet per minute, capacities of 60 tons per 24 hours, and a life of from 8 to 10 weeks. From (21) and (22); deliver oversize, between 35 and 80 mesh, to (24) and undersize, through 80 mesh, to (26).

24. Three No. 5 Wilfley tables making 240 0.75-inch throws per minute. Each handles 25 tons per 24 hours and requires 6.5 gallons of wash water per minute. From (23); deliver lead concentrates to (32), middlings (Fe, Zn, SiO_2, and some Pb), to (25), head waters to (19), and tailings to creek.

25. One No. 5 Wilfley table with details as in (24). From (24); delivers lead concentrates to (32), middlings (Fe, Zn) to (33), head water to (19), and tailings to creek.

26. Twelve 8-foot Callow pulp-thickening and settling tanks. From (22) and (23); deliver thickened slimes and through 80-mesh sand, via siphon bottom discharge, to (27), and overflows, with little slimes, to creek.

27. Six No. 5 Wilfley tables making 240 0.625-inch throws per minute. Each handles 24 tons per 24 hours and requires 6 gallons of wash water per minute. From (26), fed with through 80-mesh stuff; deliver lead concentrates to (32), middlings (Fe, Zn, SiO_2, and some Pb) to (28), head waters, very thick and slimy, to (29), and tailings to creek.

28. One No. 5 Wilfley table with details as in (27). From (27); delivers lead concentrates to (32), middlings (Fe, Zn) to (33), head water to (19), and tailings to creek.

29. One 2-inch Traylor horizontal centrifugal sand pump, making 1,031 revolutions per minute, and handling 50 tons (dry) of slimes and water per 24 hours against a head of 16 feet. Liners and runners last 3 months. From (27); delivers to (30).

30. Six 8-foot Callow pulp-thickening and settling tanks. From (29); deliver thickened pulp, via siphon bottom discharge, to (31) and overflows, with little slimes, to creek.

31. Twelve 6-foot Frue vanners, making 220 1-inch throws per minute. Each handles 4 tons per 24 hours and requires 0.4 gallon of wash water per minute. Belt travels 4 feet per minute. From (20) and (30); deliver lead concentrates to (32) and tailings to creek.

32. Wet lead-concentrates bin which is made of wood and has a capacity of 12 tons and a flat bottom. From (17), (18), (24), (25), (27), (28), and (31); delivers, via screw conveyor, to (34).

33. Wet iron-zinc concentrates bin with details as in (32). From (18), (25), and (28); delivers, via screw conveyors, to (35).

34. Stearns-Roger scraping conveyor set on an incline of 30°, making three 1.5-foot strokes per minute, and having a capacity of 25 tons per 24 hours. From (32); delivers to one compartment in (36).

35. Stearns-Roger scraping conveyor with details as in (34). From (33); delivers to one compartment in (36).

36. Two-compartment Stearns-Roger horizontal scraping conveyor and sheet-steel drier, located on top of the dust chamber. It is 64 feet long and has a total width of 8 feet. From (34) and (35); delivers dry lead concentrates to (37) and dry iron-zinc concentrates to (38).

37. Conical dry lead-concentrates bin which is made of sheet steel, has a capacity of 25 tons, and sides sloping at 45°. From (36). Concentrates are sacked, shipped, via pack mules (5 miles) and railroad, and sold to a lead smelter for values in gold, silver, lead, and excess of iron over silica.

38. Conical dry iron-zinc concentrates bin with details as in (37). From (36); delivers, via gravity, to (39).

Magnetic Plant.

39. Eight-inch elevator, with a 6-ply rubber belt, having a speed of 314 feet per minute and sheet-steel buckets, 3 × 6 inches, elevates 25 tons of ore 35 feet per 24 hours. From (38); delivers to (40).

40. Shaking feeder. From (39); delivers to (41).

41. A. R. Wilfley's patent shaft roasting-furnace with dust chamber in connection. From (40), the pyrite receiving a flash roast during gravity fall, while the sphalerite is unaffected; delivers roasted concentrates to (42), flue dust to (43), and shaft lump-accretions which are barred down in shaft (mostly Fe, Cu, and some mechanically held Zn), as crude ore which is sold to a lead smelter for values in gold, silver, copper, and excess of iron over silica.

42. Water-cooled screw conveyors. From (41) and (43); deliver to (44).

43. Dust chamber in connection with (41). From (41); delivers, automatically and by gravity, flue dust to (42).

44. Eight-inch elevator with an 8-ply Gandy belt having a speed of 348 feet per minute and sheet-steel buckets, 3 × 6 inches, elevates 25 tons of ore per 24 hours. From (42); delivers to (45).

45. Two conical bins of 2 tons capacity and other details as in (37). From (44); deliver, via gravity, to (46).

46. Two Ding's electro-magnetic separators. From (45); deliver magnetic product to (47) and non-magnetic product to (48).

47. Conical iron-concentrates bin with details as in (37). From (46). Concentrates are sacked, shipped, via pack mules (5 miles) and railroad, and sold to a lead smelter for values in gold, silver, copper, and excess of iron over silica.

48. Conical zinc-concentrates bin with details as in (37). From (46). Concentrates are sacked, shipped, via pack mules (5 miles) and railroad, and sold to a zinc smelter for values in gold, silver, and zinc.

Of the total gold and silver recovered by amalgamation the lip and apron plates save 95.25%, the Pierce amalgamators 4.25%, and the quick traps, 0.50%.

The plates are kept very wet with quicksilver, are cleaned up with straw whisk brooms once in 24 hours and dressed with quicksilver 4 times per 24 hours on low-grade ore, and 5 times on high-grade ore. On high-grade ore, cyanide and lime are used very sparingly, perhaps twice a week. On low-grade ore, cyanide and lime are used daily. Since the installation of the Pierce amalgamators the loss of quicksilver has been reduced about 60% and the net saving represents $1,000 per month more than formerly, although they require the attention of one extra man. The average quicksilver loss on 136,475 tons of ore was 4.83 pennyweights per ton.

An approximate analysis of the crude ore is as follows: Au, 0.4305 ounce and Ag, 1.97 ounces per ton; Pb, 3.3%; Zn, 6.0%; Fe, 9.0%; and Cu, 0.32%.

The lead concentrates from the wet mill run about as follows: Au, 2.10 and Ag, 20.00 ounces per ton; Pb, 56%; Zn, 3.5%; Fe, 13.5%; Cu, 1.5%; and SiO_2, 5.0%.

The zinc and iron products from the magnetic plant give the following results:

	Au. Ounce.	Ag. Ounce.	Pb. Percent.	Zn. Percent.	Fe. Percent.	Cu. Percent.	SiO_2. Percent.
Zinc Concentrates	0.80	4.00	4.10	45.70	6.20	1.90	13.40
Iron "	0.75	0.74	5.14	12.00	40.00	7.00	12.30

Labor and Wages.

This mill operates three 8-hour shifts per 24 hours every day in the calendar year. Some work, such as crushing, conveying, sacking and, in the summer time, firing, is done on two 12-hour shifts.

The help employed averages 10.33 men per shift, to which must be added 3 extra men on the day shift who act as roustabouts. The following wage scale applies per shift: Shift-bosses, $5; amalgamators, $4.50; amalgamator helper, $3; crusher-men, $3.50; conveyor-men, $3; battery men, $4.00; battery-men helpers, $3.50; concentrator-men, $4; concentrator-men helpers, $3.50; concentrates shovelers and sackers, $3; magnetic plant furnace-men, $4.50; helpers, $3.50; fire-men, $3.50; repair-men, $6; and all common labor, $3.

Power and Water.

The power required by this plant in January, 1908, was 237.63 horse-power.

The mill is heated by steam from one boiler, about 15 tons of coal being consumed per month in the summer and 45 tons in the winter.

Approximately, 23,000,000 gallons of water per 24 hours are required as a maximum. During the spring this is obtained from the old Tomboy mine; in the fall and winter, Lake Ptarmigan, just over the range and only 350 feet below the crest, furnishes the water for the mill by means of a small electric pump, and a pipe line 1.75 miles long. The pipe line, 5 inches in diameter at the start, is reduced to 4 inches at the summit and gradually to 2.5 inches at the mill.

§ 1446. MILLING IN WESTERN CHIHUAHUA. — In recent years the ores of the district of Rayon have been worked by stamp mills, followed by pan amalgamation with or without subsequent concentration. Very recently some of the mills have applied the cyanide process to the further treatment of the tailings.[59]

Ocampo, the seat of this district, is situated in the heart of the Sierra Madre Mountains, 90 miles west of Minnaca, the nearest railroad station. It is reached by a broad, much traveled pack trail over which all supplies for the district go by mule pack train.

The rate for ordinary freight, of convenient bulk and suitably divided for packing, is $3.25 * per "carga" (300 pounds). A good mule will carry 300 pounds of freight, but the pack must be divided into two or three packages of equal weight. Bulky goods must pay a premium and the average for all freight is estimated at $3.50 per "carga," which equals $23.33 per short ton or $0.259 per ton mile, which compares very favorably with wagon freight in Western United States mining districts.

Special freight of awkward shape or unusual weight is carried by special contract, at rates sometimes five or six times the ordinary freight rates. This makes shipments of machinery expensive and adds greatly to the cost of in-

* All values are given in United States Currency.

stallation of mining plants. Wagon roads are being built and when completed will facilitate shipments of heavy freight.

Timber near Ocampo is pretty well cut off and it has to be packed some distance. In the outlying camps timber is generally plentiful. Cord wood is cut in 2½ or 3-foot lengths, convenient for mule packing. Two and one-half foot wood is piled 10 feet long and 5 feet high, equaling 125 cubic feet. Three-foot wood is piled 8 feet long and 5 feet high, equaling 120 cubic feet. The cost of oak fuel for steam, piled in the yard, is $2.50 to $3.25 per cord, plus $0.50 to $0.75 for stumpage.

The ores are chiefly of quartz with a small proportion of heavy minerals; the concentration sometimes running as high as 1000:1. In some cases, where concentration precedes amalgamation, coarse free gold may be seen in a yellow band, running off the head of the Wilfley table. Besides gold, the other minerals noted, are native silver, argentite, pyragyrite, proustite, tetrahedrite, and pyrite.

The gold value is always important, usually forming more than one-half, and in some cases three-quarters of the output. The mill saving is high (80 to 85% of the assay value) on gold; but poor on silver (often not more than 40 to 50%). When cyaniding the mill tailings the silver extraction is usually much better.

The following trees of the ore treatment at the El Potrerito mill and of the Concheño mill illustrate the differences in the case of the old practice where amalgamation and concentration alone are used, and in the new methods where the tailings from concentrating machines are subjected to a cyanide treatment before going to waste.

§ 1447. Mill No. 115. El Potrerito Mill. — El Potrerito Camp is 50 miles west of Ocampo and its 10-stamp mill is working on typical ore. The mill was built in 1902 and is a good example of the type of mill in use before the introduction of cyanide methods. An outline of the process (April, 1905), is as follows:[59]

1. Ore floor to which tramway buckets dump. From the mine; ore is delivered, by hand shovel, to (2).

2. Blake-type breaker. From (1); delivers crushed ore to (3).

3. Bins. From (3); deliver, via automatic feeders, to (4).

4. Ten stamps. From (3); deliver pulp to (5). The stamps weigh 850 pounds, and the ore is crushed through a 40-mesh wire-cloth screen. Wet crushing is employed but no amalgamation is attempted here.

5. Settling tanks. From (4). The sand settles and is shoveled to (7). The slime water overflows and is delivered, via launders, to (6).

6. Settling reservoirs. From (5); delivers settled slimes, via hand shovel, to (7) and overflows to waste.

7. Four amalgamating pans, 5 feet in diameter. From (5), (6), and (10); deliver to (8).

8. Two settlers. From (7); deliver amalgam to strainer, thence to retort, and pulp overflows, via launders, to (9).

9. Two Wilfley tables. From (8); deliver concentrates to smelter and tailings to (10).

10. Tailings sluice. From (9). The sluice is broad with riffles in which the coarse sand settles. These settlings are periodically shoveled to hand-barrows and re-fed to (7), while the overflow goes to waste.

C. 1. Concentration followed by Lixiviation.

Mills 116 and 117 serve to illustrate this method of treatment in two districts.

§ 1448. Mill No. 116. Concheño Mill. — This mill is located about

25 miles northeast of Ocampo. The ore treated is a typical quartz, containing a very small proportion of heavy minerals, but a rather unusual amount of slime-making material which complicates the milling treatment. Pan amalgamation was discarded at this mill a number of years ago and the cyanide treatment as outlined below has brought the mill to a high degree of efficiency.[59]

1. Ore floor. From mine tram cars. Lump rock is hand picked and delivered to (2) while mud and fines are shoveled to (3).

2. Blake-type breakers. From (1); deliver crushed ore to (3).

3. Bins. From (1) and (2); deliver, via automatic feeders, to (4).

4. Sixty stamps. From (3); deliver pulp to (5). The stamps weigh from 900 to 950 pounds and crush wet through 40-mesh cloth screens. No amalgamation is attempted.

5. Six Wilfley tables. From (4); deliver concentrates to smelter and tailings, via launders, to (6).

6. Settling tanks. From (5); deliver settled sands, via hand shovels, to car which dumps to (7) and slime water, via launders, to (8). These tanks are stirred with poles by boys to promote the separation of the slimes.

7. Cyanide leaching tanks. From (6); deliver solution to (14) and tailings to waste. The tanks are 25 feet in diameter and 5 feet deep.

8. Five settling ponds. From (6); deliver settled slimes, via hand-shovel and car, to (9) and water to waste.

9. Slimes bin. From (8); delivers to (10).

10. Four slimes agitators. From (9); deliver to (11).

11. Two steam slimes-pumps. From (11); deliver pulp to (12). Operate under 90 pounds pressure.

12. Three filter presses. From (11); deliver cake, after washing, to (13) and solution to (14).

13. Agitator with a stream of water. From (12); breaks up cake to form a pulp and delivers it to waste.

14. Extractor room. From (7) and (12); delivers precipitate to smelter.

§ 1449. MILL NO. 117. DESERT POWER AND MILL COMPANY.[22] — The 100-stamp mill and power plant of the Desert Power and Mill Company, milling the ore produced from the mines of the Tonapah Mining Company of Nevada, is located at Millers, Nevada, a station on the Tonapah and Goldfield Railroad, 13 miles west of Tonapah.[149] The main mill building is 525 × 230 feet in extreme dimensions and is erected on ground with only a 3% slope.

The Tonapah ore bodies are largely replacements of andesite by quartz, forming parallel or branching veins and veinlets of quite solid quartz, separated by more or less mineralized andesite which frequently contains good values. The ore as stoped is therefore a mixture of quartz and porphyry. Some of the earlier barren porphyry is sorted out before the ore is sent to the mills.

The primary ores of Tonapah consist of a gangue of quartz with some sericite and andalusite, usually a small percentage of the carbonates of lime, magnesia, iron, and manganese. Silver is present mostly as sulphides and sulphantimonides; gold, never visible, and in some form not as yet determined, and small amounts of pyrite and chalcopyrite, with traces of lead, zinc, arsenic, selenium, and other elements.

All of the ore now being treated at the Desert mill is partially oxidized. This oxidation, however, is never complete and most of the silver is still present in the form of argentite which is probably mixed with stephanite, but in the more oxidized phases cerargyrite is common, frequently associated with embolite, bromyrite and iodyrite. The carbonates of the primary ore are represented by oxides of iron and manganese, also gypsum. In the process of oxidation, a large portion of the iron, manganese, antimony, arsenic, copper, lead, zinc, and

selenium originally present has been removed. In none of the ore, however, are the base metals present in sufficient quantities to be of value.

A sample of rich ore from the Valley View vein analyzed by Dr. Hillebrand of the U. S. G. S., showed the following results:

Ag.	62.54%	38.10% as sulphides, 24.44% as chloride, selenide, and alloy.
Au.	0.62 "	
Fe., Mn.	1.46 "	
Cu., Pb., Mn. ..	0.51 "	
Se., Sb., As....	0.96 "	

The ratio of silver to gold by weight in the ore treated at the mill is about 90 to 1, the average content being 0.36 ounce gold and 33 ounces silver per ton.

At present (March, 1908), about 13,000 tons of ore are milled per month.

The crude ore comes from the mines in steel hopper-bottomed railroad cars, having a capacity of 50 tons each. The cars, in trains of seven, are hauled up an inclined trestle and dumped to the crusher ore-bin.

Coarse-Crushing and Sampling Department.

The coarse-crushing and sampling department is located in a separate building. The crushing plant has a capacity of 400 tons in 8 hours. Power for driving the machinery is supplied by a 125 horse-power motor.

The run of the mine ore is fed, via a finger gate, to (1).

1. Two No. 7½ Gates breakers, style "K," set to break to about 2-inch cubes. From the breaker bin; deliver crushed ore to (2).

2. Elevator with an 8-ply rubber belt, 26 inches wide, 128 feet long, and having a belt speed of 255 feet per minute. The buckets, of No. 10 steel, 24 × 10 × 10 inches, are placed 15 inches apart and have a profitable life of about 2 years. The capacity of the elevator is 250 tons per hour. From (1); delivers to (3).

3. Manganese-steel trommel, 4 × 16 feet, with plates 0.75 inch thick, holes 1.25 inches in diameter, and making 16 revolutions per minute. From (2); delivers oversize to (4) and undersize to (5).

4. Two No. 4 "D" Gates gyratory breakers. From (3); deliver crushed ore to (5).

5. Snyder ore sampler, 5 feet in diameter. From (3) and (4); delivers sample to (6) and rejected ore to (9).

6. Elevator with a 5-ply belt, 10 inches wide, 52 feet long, and having a belt speed of 219 feet per minute. The buckets, of No. 16 steel, 9 × 6 × 6 inches, are placed 9.5 inches apart. The elevator has a capacity of 30 tons per hour and a life of 1 year. From (5); delivers to (7).

7. Rolls, 10 × 30 inches, set to crush to about 0.375-inch cubes, making 100 revolutions per minute and having a capacity of 25 tons per hour. From (6); deliver crushed ore to (8).

8. Synder ore sampler, 42 inches in diameter. From (7); delivers sample to re-grinder for assay office and rejected ore to (9).

9. Troughed belt conveyor with a 5-ply rubber belt, 18 inches wide, 780 feet long, and having a belt speed of 408 feet per minute, driven by a 15 horse-power motor. The conveyor has a capacity of 250 tons per hour and a life of 2.5 years. It carries the ore up a 22° incline. From (5) and (8); delivers to (10).

10. Robins automatic tripper. From (9); delivers to (11).

11. Battery storage bin with a capacity of 1,500 tons. From (10); delivers, via rack and pinion gates, to (12).

Fine-Crushing and Concentrating Department.

12. Twenty Challenge ore feeders. From (11); deliver to (13).

13. One hundred stamps arranged in twenty 5-stamp batteries. Each 20 stamps is driven by an independent 50 horse-power motor. The order of drop is 1, 3, 5, 2, 4. The stamps weigh 1,047 pounds each, the weight being made up as follows: stem, 427 pounds; tappet, 140 pounds; boss, 320 pounds; and shoe, 160 pounds. The stamps drop 104 times a minute through a height of 6.5 inches and have a duty of 4.84 tons per stamp per 24 hours, crushing through a woven-wire screen with 12 meshes to the inch, the height of discharge being 3 inches. The mortars of the stamp batteries are of the narrow pattern, single-discharge type, manufactured by the Union Iron Works. They are set on concrete foundations, rubber sheeting 0.25 inch thick being placed between the mortars and top of the concrete. End and side liners of malleable cast steel are used in the mortars. The dies used are 9.25 inches in diameter and 8 inches high; the shoes are 9 inches in diameter, 9 inches high, and have necks 5 inches long, tapering from 4.625 to 3.625 inches in diameter. Chrome-steel shoes and dies have been in use, but dies cast from a mixture of cast iron and steel are being tried with very satisfactory results, a more even wearing of the shoes being obtained by the combination. Both shoes and dies are worn down until less than 2 inches thick, compensation for loss of weight being made by the addition of cast-iron false dies of varying thicknesses. The chrome-steel dies have an average life of 1,736 hours, crushing 315 tons of ore each. The shoes last 1,011 hours, crushing 285 tons each. The steel consumption of dies and shoes is respectively 6.70 and 7.60 ounces per ton of ore crushed. The battery crushing takes place in a solution carrying 0.15% cyanide, and 6 tons of solution are introduced for each ton of ore crushed. From (12) and cyanide solution from (58); deliver pulp to (14).

14. Sand wheel, 30 feet in diameter. The wheel has 96 buckets, 16 inches wide, 14 inches deep, and set at an angle of 45° to the rim. The buckets have a capacity of 1,300 cubic inches when at the lowest point in travel and actually elevate about 6 pounds of solution and 1 pound of ore per bucket. The buckets are made of redwood and last about 2 years. The wheel is driven by a 7.5 horse-power motor at a speed of 5.875 revolutions per minute. The actual working capacity, at the above speed, is 666 pounds of ore and 3,996 pounds of solution per minute. From (13) and (36); delivers to (15) or (59).

15. Ten double-cone classifiers with 0.5-inch spigots. The outer cones are 20 inches in diameter at the overflow by 18 inches deep, and the inner cones are 7.5 inches in diameter by 22 inches in depth. The hydraulic rising current is of cyanide solution. Following is a typical sizing test on the feed and products of these classifiers:

Screen. Mesh.	Feed from Battery.	Overflow of Classifiers.	Spigots from Classifiers.
On 20	6.82 percent	0.20 percent	4.40 percent
" 30	17.58 "	3.71 "	23.27 "
" 40	8.85 "	3.42 "	11.37 "
" 50	10.32 "	7.04 "	20.46 "
" 60	12.83 "	5.10 "	8.30 "
" 80	8.62 "	13.88 "	13.39 "
" 100	7.82 "	15.90 "	6.67 "
Through 100	27.16 "	50.30 "	11.65 "

From (14); deliver spigots to (16) and overflows to (18).

16. Five 5-foot Huntington mills crushing through wire screens with 30

meshes to the inch. They make 75 revolutions per minute and have a capacity of 25 tons each, per 24 hours. The life of the dies is 72 days and the muller rings last 50 days. Ordinarily, 3 mills re-grind the spigot product originally coming from 80 stamps. Following is a sizing test on the Huntington mill product:

Screen. Mesh.	Percent.
On 30	2.7
" 40	5.1
" 60	24.2
" 100	32.4
Through 100	35.7

A 50 horse-power motor drives these mills and (17). From (15); deliver pulp to (17).

17. Elevator with a belt 18 inches wide and 16-inch steel buckets. From (16); delivers to (18) and (19).

18. Twenty No. 5 Wilfley tables mounted on a concrete floor with sufficient slope to allow drainage of any leaks or drips to the tailings launder which is also made of concrete. The tables make 240 strokes per minute, the length of stroke varying from 0.375 to 0.75 inch according to the class of material treated. Each table has a capacity of 20 tons per 24 hours. A 30 horse-power motor operates these tables and (59). From (15), (17), and (58); deliver concentrates to (22), middlings to (21), and tailings to (23).

19. Five new Woodbury concentrators, 6 × 10 feet, making 260 three-quarter-inch strokes per minute and having a capacity of 19 tons each, per 24 hours. A 20 horse-power motor drives these tables and also (20) and (21). From (17) and (58); deliver concentrates to (22), middlings to (21), and tailings to (23).

20. Eight Johnston vanners with belts 6 feet wide and capacities of about 10 tons each per 24 hours. From (21), (27), and solution from (58); deliver concentrates to (22) and tailings to (23).

21. Elevator with an 18-inch belt and 16-inch steel buckets. From (18) and (19); delivers to (20).

22. Concentrates bin, fitted with steam coils, under a sheet-iron bottom, for drying. The concentrates are dried until they contain less than 12% of moisture. From (18), (19), and (20); the concentrates are sacked in jute bags and shipped in carload lots to the smelter.

23. Sand wheel, 54 feet in diameter. The wheel has 150 redwood buckets, 16 inches wide, 14 inches deep, and set at an angle of 45° to the rim. The buckets last about 2 years and have a capacity of 1,300 cubic inches at the lowest point of travel. The wheel is driven by a 10 horse-power motor at 4.375 revolutions per minute and has an actual working capacity at the above speed of 666 pounds of ore and 4,662 pounds of solution per minute. From (18), (19), and (20); delivers to (24) or (59).

24. Ten double-cone classifiers with spigot openings 0.375 inch in diameter. The outer cones are 24 inches in diameter at the overflows and 22 inches deep; and the inner cones are 7.5 inches in diameter and 26 inches deep. From (23) and hydraulic rising current, a weak cyanide solution, from (60); deliver spigots to (29) and overflows to (25).

25. Ten double-cone classifiers with spigot openings 0.375 inch in diameter. The outer cones are 36 inches in diameter at the overflows and 30 inches deep; and the inner cones are 12 inches in diameter and 34 inches deep. From (24) and hydraulic rising current, a weak cyanide solution, from (60); deliver spigots to (29) and overflows to (26).

26. Six pointed-boxes with spigot opening 0.375 inch in diameter. From (25) and (37); deliver spigots to (27) and overflows to (38).

27. Three 60-inch cone classifiers. From (26); deliver spigots to (20) and overflows to (28) and (39).

28. One 4-inch Sherman centrifugal pump. From (27); delivers to (39).

29. Butters and Mein revolving pulp distributor hung from a circular overhead trolley so that it can be swung over an arc of 270° and delivered to any one of the four vats under (30). From (24) and (25); delivers to (30).

Sand Treatment.

30. Three redwood collecting-vats, 33 feet in diameter and 8 feet deep, provided with cocoa matting and 10-ounce canvas filters laid on wooden strips. The filters are raised 3 inches above the bottom of the vats. The collectors are provided with roller-blind overflow gates for slimes overflows and are filled with sand to a depth of 5 feet. After filling they are allowed to drain for 16 hours and then suction is applied to dry the contents sufficiently for excavating. Each vat is provided with a wrought-iron conical plug, 22 inches in diameter, seated on a rubber gasket in a cast-iron flange in the center of the vat. This plug is removed before excavating the sand, and leaves a clear opening from the top of the sand down through the bottom of the vat. From (29); deliver sands to (31), overflows to (36), and drainings to (47) or (48).

31. Blaisdell Class A excavator. Removes sands from (30) through the central plug openings and delivers it to two belt conveyors under the vats. These conveyors have 4-ply rubber belts, 20 inches wide, 188 feet long, travel 360 feet per minute, have a capacity of 150 tons per hour, and a probable life of about 2 years. They deliver to two inclined belt conveyors with details same as the first set, except that the belts are 53 feet in length. These latter conveyors deliver the sand to (32). It requires from 2 to 3 hours to excavate 250 tons of sand, depending upon the moisture in the material. While the excavator is working, slacked lime, to the amount of 4 pounds per ton of sand, is thrown into the collector, thus thoroughly mixing the lime with the sand.

32. Belt conveyor with same details as those described under (31), except that it is 815 feet long. Lead acetate, previously dissolved in water, to the amount of 0.5 pound per ton of sand, is allowed to drop onto the material on the belt. From (31); delivers to (33).

33. Blaisdell Class A tripper. From (32); delivers to (34).

34. Blaisdell Class Z sand-distributor. The ore from the belt of this distributor falls onto a rapidly revolving disc with a speed-regulating device, by means of which the sand is distributed about the tanks in a fine shower and at the same time is thoroughly aerated. From (33); delivers to (35).

35. Eighteen redwood leaching-tanks, 33 feet in diameter and 8 feet deep, provided with the same type filters as (30), and discharging pulp with the Blaisdell excavator in the same manner. After a tank is filled with sand, a little shoveling is done to level the material, and the first leaching solution, amounting to 30 tons, is added and brought up to 0.25% strength by the addition of a sufficient amount of potassium cyanide solution of known strength. This solution is kept in circulation for 16 hours, by returning the filtrations by means of small air lifts connected to the leaching pipes of each vat. The strong solution is then drained off and followed by repeated pumpings of weak solution of 0.15 to 0.20% strength, after which the charge is drained for transferring to another tank. This first treatment, including time consumed in transferring, generally occupies about 5 days.

The charge after transference to another tank is re-treated with repeated

pumpings of strong and weak solution and finally drained for transference to another vat where it receives its third and last treatment. The second treatment lasts for about 5 days. The final treatment consists of as many pumpings of wash solution as there is time to apply, followed by two or three pumpings of water to displace all solution. The vat is then finally drained, by vacuum, for discharging the sand from the plant. All pumpings of solution are allowed to disappear below the surface of the sand before the succeeding one is applied. The total time of treatment is from 12 to 15 days. The discharged sand carries about 15% moisture and assays about 0.03 ounce gold and 3.10 ounces silver per ton. A typical sizing test on the sand residues is as follows:

Screen. Mesh.		Percent.
On	20	0.15
"	30	11.64
"	40	13.98
"	50	12.31
"	60	10.48
"	80	17.54
"	100	12.77
Through	100	21 05

The sands are transferred from one tank to another, by means of the Blaisdell excavator, which delivers to one of two belt conveyors having details the same as those described under (31), except that they are 616 feet long. This conveyor discharges to the conveyor system under (31) and the material is thus delivered to the tanks again. In discharging the sands to waste, the direction of travel of the conveyor above described is reversed and the material is delivered to the tailings stacker conveyor which is of the same type and has similar details to (32), except that it is 830 feet long and delivers to the stacker which runs up an incline of 25°. From (34), (57), and (70); deliver solutions to (47) and (48), and discharged sands to tailings dump.

36. Spitzkasten, 3 feet wide, 3 feet deep, and 4 feet long. From (30) and (59); delivers spigot to (14) and overflow to (37).

37. One 4-inch Butters' centrifugal pump running at 2,200 revolutions per minute, and lifting 400 gallons per minute to a height of 30 feet. The runner is 10 inches in diameter and has 4 arms. The life of the runner is 60 days, liners 120 days, bushings 120 days, bearings 120 days, and dividers 60 days. From (36); delivers to (26).

All leachings from sand vats as well as plant solutions are sampled, assayed, and titrated for cyanide and alkalinity daily.

Attenuated leaching solutions and washes are precipitated in a special zinc box.

Centrifugal pumps when not pumping to treatment vats are in service circulating solution in sumps through cones for the purpose of aerating.

Slimes Treatment.

38. Five slimes-agitating tanks, 36 feet in diameter and 20 feet deep with rim overflow-launders. The tanks are made of 3-inch redwood and are provided with mechanical arm agitators driven by a 30 horse-power motor with gearing and friction clutches over each vat. Each tank has two 4-arm agitators placed quartering to one another; and 2 feet and 8 feet respectively from the bottom of the tank. The lower agitator has drags attached to the arms to keep the heavier fine sand in suspension. Previous to receiving a charge of thick pulp from the collectors, about 150 tons of barren solution is pumped into the agitator. To this is added 1,200 pounds of slacked lime, 500 pounds of dissolved cyanide, 100 pounds of lead acetate, and the whole agitated for 30 minutes by

the mechanical agitators and pumps. The charge of thick pulp is then pumped in. When thoroughly mixed it has an average specific gravity of 1.144; that is, there are 21 parts of slimes to 79 of solution. The mass is agitated for 56 hours, the mechanical agitation being assisted by compressed air, admitted through a perforated pipe running half across the bottom of the tank; by two 8-inch air lifts suspended in each tank, the bottom parts clearing the top set of arms; and by an 8-inch centrifugal pump (40) taking pulp from the bottom and discharging through a baffle box at the top of the vat. This pump is put on when not in other service. At the end of 56 hours the agitation is stopped and the pulp allowed to settle for 4 hours, when about 5 feet of clear solution is decanted and run to the gold-solution storage tanks. The settled slimes are then pumped to the Butters' filter stock-tank. From (26), (40), (56), and (70); deliver slimes to (41) and decantations to (49).

39. Six slimes-collecting tanks, three of which were designed and equipped for agitating tanks and are exactly similar to those described under (38). They are, however, being used as collectors. The other three regular collecting tanks, 36 feet in diameter and 20 feet deep, are constructed of 3-inch redwood and provided with rim overflow-launders. Charges of slimes can be drawn from the bottom of the vats, by means of the centrifugal pumps (40), without interrupting the collecting. From (27), (28), (46), and (70); deliver slimes to (40) and decantations to (49) and (55).

40. Two Butters' 8-inch centrifugal pumps running at a speed of 825 revolutions per minute and each having a capacity of 912 gallons per minute against a lift of 21 feet. The runners are 16 inches in diameter and have 5 arms. The life of the runners is 43 days; liners, 90 days; bushings, 120 days; bearings, 120 days; and dividers, 43 days. From (39) and (71); deliver to (38) and (41). Used for agitating as well as transferring.

41. Stock tank for Butters' filters, 36 feet in diameter and 20 feet deep. From (38), (40), (42), and (70); delivers to (42).

42. Two Butters' 8-inch centrifugal pumps making 900 revolutions per minute and having approximate capacities of 250 tons per hour or 1000 gallons per minute. The runners are 16 inches in diameter. The maximum lift is 22 feet and the minimum lift is 2 feet. The life of the runners is 60 days; liners, 120 days; dividers, 60 days; bushings, 120 days; and bearings, 180 days. From (41), (43), (44), or (45); deliver to (41), (43), (44), (45), or slimes dump.

43. Two Butters' filter tanks containing 96 filter frames each. The following gives the average time of each operation from filling the tanks to discharging the cakes with two 8-inch centrifugal pumps operating:—

Filling with slimes	10 minutes
Collecting cake, 23-inch vacuum	60 "
Pumping back slimes	10 "
Filling with barren solution for wash	10 "
Washing cake, 23-inch vacuum	45 "
Discharging cake	10 "
Settling wash	5 "
Running back wash to tanks	10 "
Discharging slimes	20 "
Total time	180 minutes or 3 hours

All valves in connection with filtering operations are operated from a platform by a system of rods and levers. The thick slimes-cake, having been discharged, is broken up for pumping by means of 1-inch jets of water under a 70-foot head, directed downwards into the hopper of the filter vats. A mixture of air and water was tried for discharging cakes; but it was found that

without careful attention and manipulation too much pressure would be used by the operator, thereby breaking the stitching in the filter leaves. Accordingly, the cake is now discharged in the wash solution by admitting water under a 12-foot head. The wash solution is allowed to settle for about 5 minutes before running back to the tank and is then drawn off to within about 6 inches of the thick slimes in the hopper. By this means the slimes can be easily pumped out with a moisture content of not more than 60%, this figure including the water from the jets. An average of 125 tons of dry slimes is being filtered and discharged per 24 hours. From (42); deliver solution to (46) and slimes to (42).

44. Solution tank, 24 feet in diameter and 12 feet deep. From (42) and (57); delivers to (42).

45. Wash-water tank, 24 feet in diameter and 12 feet deep. From (42), (46), and (61); delivers to (42).

46. Knowles duplex vacuum-pump, 10 × 10 inches, driven by a 15 horse-power motor and making 36 strokes per minute. It pumps about 30 tons per hour, but has a capacity of 120 tons per hour, with a free intake. The life of the cross-head shoes is 1 year; rods, 1 year; and pinion, 2 years. From (43); delivers turbid gold-solution to (39) and (45).

47. Duplex vacuum-pump, 6 × 8 inches, making 100 strokes per minute and lifting 30 tons per hour, with a free intake, against a lift of 4 feet. The life of the valves is about 6 months and the probable life of plungers, rods, shoes, pinion and brasses, is about 2 years. From (30) and (35); delivers to (50) and (54).

48. Distributing box. From (30) and (35); delivers to (50), (52), one box of (53) or (54).

49. Distributing box. From (38) and (39); delivers to (50) or (55).

Precipitation.

50. Two gold-solution sump tanks, 24 feet in diameter and 8 feet deep. From (47), (48), and (49); deliver to (51).

51. Two 3-inch Byron Jackson centrifugal pumps, making 1,420 revolutions per minute and delivering 120 gallons per minute, or 30 tons per hour, against a lift of 2 feet. The pumps are direct connected to two 2 horse-power motors. Runner is 8.5 inches in diameter. The life of the wearing parts is about 2 years. From (50); deliver to (53).

52. Wash-water sump, 40 feet in diameter and 8 feet deep. From (48) and (53); delivers to (57).

53. Seventeen zinc boxes made of 3-inch redwood. Each box has seven compartments, each holding 15 cubic feet of zinc shavings above the screen trays, making a total capacity for the box of 105 cubic feet or about 1,600 pounds of zinc shavings. The compartments of the boxes are arranged for an upward flow of solution. The rate of flow is 1,095 gallons per hour and the zinc consumption is 1.9 pounds per ton of ore. The average amount of solution precipitated in 24 hours is 1,800 tons; the tailings from the zinc boxes, assaying from a trace to 11 cents per ton, increase in value from the time immediately after one clean-up to the time of the next. Four clean-ups are made each month; the individual clean-ups requiring 3 days. Six men, working 8 hours, clean 5 boxes the first and last day, and 8 men clean 7 boxes on the second day. Four of these men are employed in the melting room during melts, and the others are shift men from the mill. The washing is done over the second compartment and all precipitates are screened through woven-wire screens having 30 meshes to the inch. The precipitate is allowed to settle and the solu-

tion is pumped out by (63). From (48), (51), (64), (65), (66), and zinc shavings from (72); deliver solution to (52) and (54), and precipitates to (63).

54. Two weak-solution sump tanks, 30 feet in diameter and 8 feet deep. From (47), (48), and (53); deliver to (55), (56), and (57).

55. Three circulating-solution sump tanks, 40 feet in diameter and 8 feet deep. From (39), (49), and (54); deliver to (56) and (57).

56. Butters' 8-inch solution pump, making 990 revolutions per minute and lifting 720 gallons per minute, or 180 tons per hour, against a head of 30 feet. The runner is 16 inches in diameter and has 5 runs. The life of the runners is 150 days; liners, 6 months; dividers, 4 months; bushings, 6 months; and bearings, 4 months. From (54) and (55); delivers to (38) and (58).

57. Butters' 4-inch solution pump making 1,980 revolutions per minute and lifting 396 gallons per minute, or 99 tons per hour, against a head of 20 feet. The runner is 10 inches in diameter and has 4 arms. The life of the runner is about 6 months, liners 1 year (?); dividers, 6 months; bushings, 1 year; and bearings, 3 months. From (52), (54), (55), and (71); delivers to (35), (44), and (71).

58. Battery storage-tank, 40 feet in diameter by 20 feet deep with a capacity of 786 tons or 188,640 gallons of solution. From (56) and (62); delivers to (13), (18), (19), (20), and (59).

59. One 4-inch centrifugal pump. From (14), (23), and (58); delivers to (36) and (60).

60. Solution tank for classifiers, 8.33 feet in diameter and 4 feet deep. From (59); delivers to (24) and (25).

61. Steel water tower, 4 feet in diameter and 42.33 feet high. From the main water line; delivers to (45) and (62).

62. One 3-inch Worthington water meter. From (61); delivers to (58) and whatever water is used in the mill.

Refining.

63. Knowles triplex pump, 5 × 6 inches, making 32 strokes per minute and having a capacity of 38 gallons per minute. The estimated life of the valves is 6 months; brasses, 2 years; pinions, 2 years; and gear, 4 years. From (53); delivers precipitates and solutions to (64), (65), and (66).

64. Johnson filter press provided with 24 × 24-inch frames and leaves covered with 10-ounce duck. From (63); delivers solution to (53) and precipitates to (67).

65. Precipitation room settling-tank. From (63); delivers solution to (53) and settled precipitates are bailed into tubs and sent to (67).

66. Johnson washing filter press provided with 24 × 24-inch frames and leaves covered with 10-ounce duck. From (63); delivers solution to (53) and precipitates to (67).

67. Three-muffle drying furnace, fired by coal in which the precipitates are thoroughly dried and roasted. From (64), (65), and (66); delivers to (68).

68. Six Faber du Faure tilting furnaces, equipped with graphite retorts, with a capacity of 80 pounds of fluxed precipitates. The precipitate, after roasting, is fluxed with 18 pounds of crude borax and 12 pounds of carbonate of soda per 100 pounds of precipitate. Coke is used for fuel and the first pour is made 6 hours after starting the fires. Seven thousand pounds of dried precipitate is melted into bullion in 44 hours from the time of firing the furnaces. After a charge has melted down sufficient precipitate is added to make a bullion bar weighing 1,200 ounces troy. Pours are made directly into bullion moulds which have slotted overflows for slag. The graphite retorts in the fur-

naces will last for about 30 fusions, when they are discarded and new ones installed. During January, 1908, from 27,398 pounds of roasted precipitate, 18,762 pounds of bullion were produced, that is, without any acid treatment of the precipitate the shrinkage was only 31.52% of the total weight. Twenty-three thousand eight hundred and seventy pounds of coke were used in melting the above amount of precipitate. The bullion had an average fineness in gold of 12; in silver, of 965; making a total of 977 parts fine. From (67); the furnaces deliver bullion to (73).

69. Air compressor, 12 × 14 inches. Delivers to (70).

70. Air receiver. From (69); delivers to (35), (38), (39), and (41).

71. Cyanide dissolving-box. All potassium cyanide used in the sand treatment is dissolved in this vat. A 2-inch pipe line is connected to the suctions of (40) and (57), and, by means of a table and float arranged on the vat, the desired strength of solution can be obtained by opening the 2-inch line and allowing the requisite amount of standard solution to be drawn through the pumps with the weaker solutions. From (57); delivers strong solution to (40) and (57).

72. Two zinc lathes. Deliver zinc shavings to (53).

73. Concrete steel vault. From (68); delivers bullion to bank.

Extractions and Consumptions.

Owing to the fact that the crushing takes place in cyanide solution and the sand and slimes are in contact with the solution from the time they enter the batteries as ore, it is impossible to secure intelligible samples of sand and slimes separately and to keep a record of extraction by cyanide on each product. Accordingly the difference between the gross contents of the ore and the gold and silver in the concentrates shipped is taken as the gold and silver content of the material going to the cyanide plant. The extraction by cyanide is figured from this by comparing with the total number of ounces of gold and silver shipped as bullion and refinery by-products, with the total contents of the sand and slimes residues as a check.

Ninety tons of ore produce 1 ton of concentrates averaging 4.72 ounces gold and 824.90 ounces silver per ton. The recovery by concentration from January 1, to October 1, 1908, was 12.75% of the gold and 21.00% of the silver content of the ore milled.

The extraction by cyanide for the above period was 76.85% of the gold and 69.50% of the silver content of the material. Combining these figures with the extraction by concentration given above gives a total extraction by concentration and cyaniding of 89.60% of the gold and 90.50 % of the silver content of the ore.

The sand tailings assay 0.048 ounce gold and 4.44 ounces silver per ton. The slimes tailings assay 0.044 ounce gold and 3.77 ounces silver per ton. The cyanide solution before precipitation assays 0.05 ounce gold and 3.51 ounces silver per ton; and, after precipitation, 0.002 ounce gold and 0.300 ounce silver.

The average consumption per ton of ore has been, of potassium cyanide, 3.50 pounds; lime, 7.50 pounds; lead acitate, 0.48 pound; and zinc shavings, 1.90 pounds. The amount of zinc shavings consumed is 0.42 pound per ton of solution precipitated.

Power Plant.

There are four Babcock and Wilcox patent safety water-tube boilers of the vertical header type, provided with a superheater, set in batteries of two each. Each boiler contains 2,036 square feet of heating surface and is arranged for firing with either coal or oil; the Moore oil-burning apparatus being installed

for the latter method of firing. Natural draft is obtained by means of a steel stack, 150 feet high and 66 inches in diameter.

A Green fuel-economizer utilizes the flue gases. The minor boiler-room equipment, consisting of two Snow duplex boiler-feed pumps, Goubert feed-water heater, automatic relief valves, stop and check valves, damper regulator, hot well, steam traps, feed-water meter, etc., is ample and well arranged.

There are three 14 × 28 × 30-inch horizontal cross-compound side-crank McIntosh and Seymour gridiron-valve engines, each condensing, arranged for direct connection to 250-kilowatt, 25-cycle, 2,200-volt alternators making 150 revolutions per minute. There is also one 15 × 32 × 30-inch McIntosh and Seymour engine, as above, directly connected to a 300-kilowatt alternator. All electrical equipment was furnished by the Westinghouse Electric and Manufacturing Company. The exciting current is supplied by 125-volt direct-current exciters belted from the band wheel of the generators.

Condensation of steam from the engines takes place in Edwards' condensers, equipped with power-driven air pumps. The circulating water, for condensing, is pumped by means of 8-inch double-suction Wheeler centrifugal pumps, directly connected to 40-horse-power motors, to a fan-driven steel water-cooling tower. Suitable switchboards with generator panels and distributing boards for the mine and mill are conveniently located in the engine room.

Step-up transformers raise the voltage from 2,200 to 22,000 volts for transmission over the 12-mile line to the hoists at the shafts in Tonapah. Step-down transformers lower the voltage at the mill from 2,200 to 440 volts. All mill motors are 25-cycle, 440-volt, type C.

The average total power used is 550 horse-power. This is for all milling operations, including pumping of water.

Water Supply.

Water, for mill and power plant use, is pumped by a 2-stage vertical centrifugal pump from a well, 60 feet deep, located 1,700 feet north of the plant.

Labor.

The mill runs three 8-hour shifts per day. The average number of men employed, including the office force, is 109, including 10 men on construction work.

Battery men, millmen, and concentrators receive $4.50; electricians, $5; carpenters, $5.50; mechanics, $5; blacksmiths, $5.50; blacksmith and carpenter helpers, $4.50; solution men, $4; head refinery man, $5; helpers, $4.50; and laborers, $4; all working an 8-hour shift.

D. LIXIVIATION.

Mill 118 serves as an example of this method of extracting values.

§ 1450. MILL NO. 118. EL ORO MINING AND RAILWAY COMPANY, LIMITED, EL ORO, ESTADO DE MEXICO, MEXICO. — The ore is treated in two mills, Nos. 1 and 2, which have capacities of 350 and 425 tons per 24 hours respectively.[118] Mixed sulphide and oxide ores are taken from the lower and upper workings of the mine and milled. The gangue, in which the ore occurs, is quartz and the more common minerals are pyrite, and gold and silver values. The problem is to save the economic minerals gold and silver. Formerly sands and slimes were treated separately; but everything is now slimed and no sands are treated.[101] The results have materially improved in regard to extraction, rapidity of dissolution, and working costs, since this change. All slimes and solutions from Mill No. 1 flow to Mill No. 2. Ore from the mine [153] goes to (1) and (9).

1. Mill bin, 21 × 21 × 182 feet, with a flat bottom and a capacity of 4,000 tons. From the mine; delivers, via chutes, to (2).

2. Twenty Challenge feeders of the suspended friction-driven type. From (1); deliver to (3).

3. One hundred stamps, Mill No. 2. Each weighs 1,065 pounds, makes 100 7.5-inch drops per minute, and has a capacity of 4.25 tons per 24 hours. The discharge is 3 inches in height and the steel screens have 25 meshes to the inch. Stems weigh 465 pounds and last 5 years; cams weigh 220 pounds and last 6 years; tappets weigh 190 pounds and last 5 years; shoes weigh 190 pounds and last 86 days; dies weigh 115 pounds and last 80 days; and boss heads weigh 320 pounds and last 6 years. All are of cast steel except the stems which are of rolled steel. From (2) and (23); deliver pulp to (4).

4. Three cones, 4.67 feet in diameter by 6 feet deep. From (3); deliver spigots to (5) and overflows to (16).

5. Three cones, 2.5 feet in diameter by 2.5 feet deep. From (4); deliver spigots to (6) and overflows to (7).

6. Three Krupp tube mills, one 3.92 × 19.5 feet, one 4.92 × 23 feet, and one 4.92 × 26 feet. The first has a speed of 31, the second of 25, and the third of 27 revolutions per minute. Fifty-three pounds of mine rock are consumed per ton of sands ground. "El Oro" cast-iron ribbed liners last from 7 to 8 months. From (5) and (15); deliver pulp to (7).

7. Five cones, 4.5 feet in diameter by 6 feet deep. From (5), (6), (11), (13), and (15); deliver spigots to (12) and overflows to (8).

8. Two cone-settlers, 9 feet in diameter by 9 feet deep. From (7); deliver spigots to (12) and overflows to (16).

9. Mill bin, 13 × 16 × 168 feet with an inclined bottom and a capacity of 1,750 tons. From the mine; delivers, via chutes, to (10).

10. Twenty modified Challenge feeders of the suspended friction-driven type. From (9); deliver to (11).

11. One hundred stamps, Mill No. 1. Each weighs 1,140 pounds, has a capacity of 3.75 tons per 24 hours and steel screens of 30 mesh, 33 wire. Other details as in (3) except that the stems weigh 450 pounds, tappets 140 pounds, and boss heads 360 pounds. From (10) and (23); deliver pulp to (7).

12. Sand wheel, 40.67 feet in diameter, making 5.5 revolutions per minute. The buckets are 11 × 13 × 16 inches. Driven by a rope gearing from a 15 horse-power motor. From (7) and (8); delivers to (14).

13. Four tube mills. Two Abbé tube mills, 4.5 × 19.5 feet, making 24 revolutions per minute; and two Krupp tube Mills, 3.92 × 19.5 feet, making 31 revolutions per minute. From (14); deliver pulp to (7).

14. Three blanket concentrating-tables, 2.25 feet wide by 20 feet long. Save about 660 pounds per 24 hours. These are mainly to remove ground-up iron and steel from the pulp. From (12); deliver to (13) and (15).

15. Settling cone, 4.5 feet in diameter by 6 feet deep. From (14); delivers spigot to (6) and overflows to (7).

16. Fifteen slimes tanks, 34 feet in diameter by 12 feet deep, sides of sheet steel 0.1875 inch thick, bottoms of sheet steel 0.25 inch thick, painted on the inside with P. and B. cyanide paint and on the outside with asphaltum paint. Hold 80 tons each of dry slimes and equipped with mechanical agitators. From (4), (8), (18), and (28); deliver pulp to (18), decanted solutions to (24), and overflows to (21).

17. Nine slimes tanks, 22 feet diameter by 10 feet deep, holding 27 tons each of dry slimes and equipped with a traveling agitator. From (18) and (28); deliver pulp to (18) and decanted solutions to (24).

18. Six Butters' centrifugal agitating pumps making 1,420 revolutions per

minute, and requiring 20 horse-power to pump 500 gallons per minute against a head of 24 feet. All are direct motor-driven. From (16) and (17); deliver pulp to (16), (17) (for agitation), and (19).

19. Eight slimes-settling tanks, 34 feet in diameter by 20 feet deep, holding 880 tons of dry slimes. Other details as in (16). From (18); deliver pulp to (20) and decanted solutions to (21).

20. Six Burt filter presses, 3.5 feet in diameter by 20 feet long. Each handles 165 tons of dry slimes per 24 hours. Eighteen pairs of filter leaves per press. Forty minutes are required for each operation, which includes, charging the press, washing the slimes with water, discharging and returning the surplus slimes. From (19); deliver slimes to waste and solutions to (21).

21. Two return-solution tanks, 30 feet in diameter by 16 feet deep, holding 353 tons each of dry slimes. Other details as in (16). From (16), (19), and (20); deliver to (22).

22. Gebrüder Sulzer (Germany) return-water centrifugal pump making 1,450 revolutions per minute and requiring 100 horse-power to pump 1,500 gallons per minute against a lift of 125 feet. Direct motor-driven. From (21); delivers to (23).

23. Two steel mill-tanks at San Rafael, 8 × 24 × 48 feet, holding 288 tons each of solution. Other details as in (16). From (22); deliver to (3) and (11).

24. Four weak-solution filters. Three 40 feet in diameter by 10 feet deep; and the other 30 feet in diameter by 10 feet deep. The first 3 handle 310 tons net per 24 hours. Other details as in (16). From (16) and (17); deliver to (25).

25. Twenty weak-solution steel zinc-boxes, 0.1875 inch thick by 4 × 16.67 feet. 0.12 pound of zinc shavings is used per ton of solution and the strength of the solution is 0.03% potassium cyanide. Since the practice of sliming all pulp was introduced, the above is the only strength used. From (24); deliver precipitate to (26) and solution to (27).

26. Burt gold-slimes filter press with details as in (20). The precipitates are steam dried in the press and in a drying car to 15% moisture, fluxed, and briqueted. The briquettes, 3 inches in diameter by 5 inches long, are charged into No. 300 graphite crucibles and melted down in 6 oil-fired furnaces. In a day 1,760 pounds of precipitates can be treated with a consumption of 240 gallons of crude oil. One gallon of oil converts into bullion 7.33 pounds of precipitates. From (25); deliver bullion to bank.

27. Five weak-solution tanks. Four, 30 feet in diameter by 16 feet deep, each holding 353 tons of solution; and one, 24 feet in diameter by 16 feet deep, holding 226 tons. Other details as in (16). From (25); deliver to (28).

28. Pump with details as in (22) except that the height of lift is but 65 feet. From (27); delivers to (16) and (17).

The total extraction of values is 93.26%. 95.09% of the gold and 81.72% of the silver is recovered.

Labor and Wages.

The mill operates 3 shifts per day, 7 days a week. Four men are employed per shift.

1 American battery man at	8.40	(Pesos)	per	shift
1 American helper man at	4.80	"	"	"
2 Mexican helpers at	1.25	"	"	"

Power and Water.

The power is all electrical and supplied by the Mexican Light and Power Company from their station at Necaxa to their sub-station at El Oro, a distance

of about 175 miles. All the water used comes from the mines. The mine electric triplex pumps deliver the water to masonry reservoirs from which the necessary supply is taken. The ore is crushed in cyanide solution with a ratio of about 8 parts of solution to 1 part of ore. Mill No. 1 consumes 2.6 horse-power; and Mill No. 2, 3.0 horse-power per stamp. The total power required is 560 horse-power.

E. Mills Saving only Silver Values.

Mill 119 is a representative of this class.

§ 1451. Mill No. 119. The Coniagas Mines, Limited, St. Catharines, Ontario, Canada. Concentrating Plant.[148] — This mill has a capacity of 90 tons per 24 hours. The ore consists of the economic minerals smaltite and niccolite, carrying high silver values of both native silver and the silver sulphides.[112] The gangue is a slate conglomerate and calcite. The problem is to save the silver-bearing minerals.

The ore is hand sorted in the mine into high-grade shipping ore, waste, and milling ore, the latter being hoisted in a vertical skip, holding 2,600 pounds, and dumped, via chute, to (1).

1. Storage bin. From the mine; deliver to (2).
2. One Blake-type breaker, with a 10 × 16-inch jaw opening, breaking to 2.5 inches. From (1); delivers crushed ore to (3).
3. One 10-inch bucket elevator. From (2); delivers to (4).
4. Storage bins. From (3); delivers to (5).
5. Grizzly with 1.25-inch spaces between the bars. From (4); delivers oversize to (6) and undersize to (7).
6. One Champion swing-jaw breaker, breaking to 1.25 inches. From (5); delivers crushed ore to (7).
7. Storage bin. From (5) and (6); delivers to (8).
8. Automatic feeder, wall type. From (7); delivers to (9).
9. Rolls, 10 × 30 inches, crushing to 0.75 inch. From (8); deliver crushed ore to (10).
10. One 10-inch bucket elevator. From (9); delivers to (11).
11. One trommel, 2 × 10 feet, having two screening sections. The first section has 0.375-inch round holes and the second section 0.75-inch round holes. From (10); delivers 0.375 to 0-inch material to (12), 0.75 to 0.375-inch material to (13), and material larger than 0.75-inch to (14).
12. One trommel, 2 × 10 feet, having 3.5-millimeter round holes. From (11) and (23); delivers oversize to (16) and undersize to (15).
13. One 3-compartment Harz jig. From (11), fed with 0.75 to 0.375-inch material; delivers skimmed concentrates, via sacks and cars, to smelter and tailings to (18).
14. Rolls, 10 × 30 inches, crushing to 0.75 inch. From (11) and (23); deliver crushed ore to (17).
15. One 1-compartment classifier. From (12); delivers spigot to (21) and overflow to (22).
16. One 4-compartment Harz jig. From (12), fed with 0.375-inch to 3.5-millimeter material; delivers skimmed concentrates, via sacks and cars, to smelter, and tailings to (18).
17. One 10-inch bucket elevator. From (14); delivers to (23).
18. Bin. From (13), (16), (21), and (26); delivers to (19).
19. Six Challenge feeders. From (18); deliver to (20).
20. Thirty stamps, each weighing 1,250 pounds, crushing to 30 mesh. From (19); deliver pulp to (24).

21. One Wilfley table. From (15); delivers concentrates, via sacks and cars, to smelter and tailings to (18).

22. Settling tank. From (15); delivers settlings to (25) and overflow to (32).

23. One trommel, 2 × 10 feet, having two screening sections. The first section has 0.375-inch round holes and the second section 0.75-inch round holes. From (17); delivers 0.375 to 0-inch material to (12), 0.75 to 0.375-inch material to (26), and material larger than 0.75-inch to (14).

24. Three 3-foot pulp thickeners. From (20); deliver spigots to (27) and overflows to (28).

25. One Frue vanner. From (22); delivers concentrates, via sacks and cars, to smelter and tailings to (28).

26. One 3-compartment Harz jig. From (23), fed with 0.75 to 0.375-inch material; delivers skimmed concentrates, via sacks and cars, to smelter and tailings to (18).

27. Six Deister concentrating tables. From (24); deliver concentrates, via sacks and cars, to smelter, middlings to (29), and tailings to (30).

28. Three 8-foot Callow settling-tanks. From (24) and (25); deliver spigots to (32) and overflows to (33).

29. One 4-inch bucket elevator. From (27) and (31); delivers to (31).

30. Dewatering device. From (27) and (31); delivers sands to waste and slimes to cyanide plant.

31. One Deister concentrating table. From (29); delivers concentrates, via sacks and cars, to smelter, middlings to (29), and tailings to (30).

32. One Wilfley slimer. From (22) and (28); delivers concentrates, via sacks and cars, to smelter and tailings to cyanide plant.

33. Sump. From (28); delivers water, via pump, to mill system again.

Labor and Wages.

The mill operates two shifts per 24 hours, one 13 hours in length and the other 11 hours, for 6 days in the week.

Common labor receives $2 per day of 10 hours, and board costs 60 cents a day. Skilled labor is paid proportionately higher.

Power and Water.

Power for operating the mill is furnished by a 165 horse-power Premier gas engine which was made at Sandiacre, England, and is very satisfactory. The same engine runs a 240-volt direct-current generator in the mill which furnishes power to a motor direct connected to a turbine pump. This pump is located at a small lake about one-half mile from the mill and furnishes all necessary water.

F. Mills Saving Silver and Lead Values.

Mills 120, 121, 122, 123, 124, and 125 are typical examples of this group and cover the practice in three districts.

§ 1452. MILL NO. 120. BUNKER HILL AND SULLIVAN MILL, KELLOGG, IDAHO.[23] — The capacity of this mill is 3,000 tons per 24 hours.[27] The economic mineral is argentiferous galena disseminated in a gangue of siderite and quartzite. Pyrite, chalcopyrite, and sphalerite also occur, but not in sufficient quantities to be of importance.[3] The mill is operated three 8-hour shifts per day and handles 1,000 tons of ore per shift. In the following flow-sheet tonnages refer to the amount handled in 8 hours. The problem is to save the silver-bearing galena. Ore from the mine goes to (1).

Rock House.

1. Ore bin of 500 tons capacity. From the mine; delivers 1,000 tons per 8 hours, via 4 feed gates, to (2).

2. Four grizzlies with 1.25-inch spaces between the bars. From (1); deliver oversize to (3) and undersize to (6).

3. Two Comet "D" style breakers. From (2); deliver crushed ore to (4).

4. 30-inch picking belt. From (3); delivers hand-picked ore, running 40% lead or better, to smelter and residual ore to (5).

5. Crushing rolls, 14 × 36 inches. From (4); deliver crushed ore to (7).

6. Fourteen-inch belt conveyor. From (2); delivers to (7).

7. Belt conveyor, 24 inches wide, 8-ply rubber, 315 feet from center to center, 19.75° slope, handling 1,000 tons in 8 hours. From (5) and (6); delivers to (8) in the sampling tower.

Sampling Tower.

8. Vezin sampler. From (7); delivers 6.66% of the ore, as sample, to (9) and residual ore to (12).

9. Crushing rolls, 14 × 24 inches. From (8); deliver crushed ore to (10).

10. Vezin sampler. From (9); delivers 6.66% of the ore, as sample, to (11) and residual ore to (12).

11. Sample bin. From (10). The ore is quartered down to 100 pounds, then crushed to 0.25 inch and further reduced by split shoveling until the quantity desired for assay purposes is obtained. The residue from sampling goes to (12).

12. Mill bins of 500-tons capacity. From (8), (10), and (11); deliver to (13) via 2 plunger feeders.

South or Coarse-Concentration Mill.

13. Two cylindrical trommels, each with two screening sections; slope, 1.125 inches to the foot; speed, 20 revolutions per minute. The first section has 18 and the second 36-millimeter holes. The feed to these trommels from (12) is 980 tons of ore running 12% lead; and from (15) 600 tons running 8% lead. Seven hundred and fifty tons of undersize through 18 millimeters go to (18), 650 tons of undersize through 36 millimeters go to (16), and 180 tons of oversize to (14).

14. Two sets of crushing rolls, 14 × 36 inches. From (13); deliver crushed ore to (15).

15. Two elevators; 8-ply belts, 16 inches wide; 7.75 × 15-inch malleable iron buckets; speeds, 480 feet per minute; 37-inch pulleys; and 48 feet between centers. From (14), (16), (17), (19), (21), (22), and (23); deliver 600 tons of ore, running 8% lead, to (13).

16. Two-compartment jigs. From (13); deliver hutch products from all compartments to (15), side discharges from first compartments to (31) or (47), discharges from second compartments to (17), and tailings, running 0.9% lead, to (85).

17. Two sets of crushing rolls, 16 × 30 inches. From (16); deliver crushed ore to (15).

18. Two cylindrical trommels with 10-millimeter holes, making 20 revolutions per minute and having a slope of 1.125 inches to the foot. From (13); deliver undersize to (20) and oversize to (19).

19. Six 3-compartment jigs. From (18); deliver hutches to (15), side discharges from the first two compartments to (47), discharges from third compartments to (22), and tailings, running 1.3% lead, to (85).

20. Four cylindrical trommels, each having two screening sections, the first with 3 and the second with 7-millimeter holes. The trommels have a slope of 1.125 inches to the foot and make 20 revolutions per minute. From (18); deliver 300 tons of undersize from the first section, assaying 16% lead, to (24), undersize from the second section to (23), and oversize to (21).

21. Four 3-compartment jigs. From (20); deliver hutches from first two compartments to (47), hutches from third compartments to (15), side discharges from first two compartments to (47), discharges from third compartments to either (22) or (38), and tailings, running 1.9% lead, to (85).

The feed to these jigs, together with the feed to jigs (16) and (19), averages 11% lead.

22. Two sets of crushing rolls, 14 × 30 inches. From (19) and (21); deliver crushed ore to (15).

23. Four 3-compartment jigs. From (20); deliver hutches from first compartments to (46), hutches from second compartments to (48), hutches from third compartments to (15), side discharges from the first two compartments to (48), discharges from third compartments to (28), and tailings, running 2.1% lead, to (85).

24. Six 3-spigot hydraulic classifiers. From (20) and (29); deliver first spigots to (25), second spigots to (26), 24 tons of ore, as third spigots, to (27), and overflows, carrying 100 tons of ore, running 18% lead, to (40).

25. Six 3-compartment jigs. From (24); deliver hutches from first compartments to (46), hutches from second and third compartments to (58), side discharges from first compartments to (48). The second compartments discharge to the third compartments and the latter discharges go to (58), while the tailings, assaying 2.5% lead, go to (85).

26. Six 3-compartment sand jigs. From (24); deliver hutches from first compartments to (46), hutches and discharges from the second and third compartments to (58), and tailings to (85).

27. Eight 4-compartment fine jigs. From (24); deliver hutches from first compartments to (46), hutches from second compartments to (48), hutches from third and fourth compartments to (58), and tailings to (85).

28. Two middlings elevators, 14 inches wide, 7-ply belts, 7 × 12-inch malleable-iron buckets, 37-inch pulleys, and run at a speed of 417 feet per minute. From (23) and (30); deliver to (29).

29. Two trommels with screens having 3-millimeter holes. From (28); deliver undersize to (24) or (54), and oversize to (30).

30. Four 5-foot Huntington mills, two of which are held in reserve and two used. Crush through 12 mesh. From (29); deliver pulp to (28).

31. Two sets of bins. From (16); deliver, via plunger feeders, to (32).

32. Elevator. From (31); delivers 40 tons of ore, assaying 45% lead, to (33).

33. Six-foot Huntington mill crushing through 20 mesh. From (32); delivers pulp to (34).

34. Pocket launder. From (33); delivers, via 4 pockets, to (35).

35. Four Wilfley tables. Used to grade the 45% lead product fed from (34). Deliver concentrates, assaying 77% lead, to (49); middlings to (44); 15 tons of ore, as tailings, assaying 30% lead, to (36); and slimes to (50).

36. Centrifugal pump. From (35); delivers to (37).

37. Wilfley table. From (36); delivers concentrates, assaying 70% lead, to (44); middlings, assaying 40% lead, to (50); tailings, assaying 10% lead, to (58); and slimes, assaying 45% lead, to (50).

38. Elevator. Fed with 45 tons of ore, assaying 7% lead. From (21); de- to (39).

39. Six-foot Huntington mill crushing through 12 mesh. From (38); delivers pulp to (58).

40. V-shaped settling tank, 180 feet long by 6 feet deep, having 85 spigots and an overflow. From (24); delivers first set of spigots or fine sand to (41), second set of spigots to (43), and the last set of 4 spigots, discharging 2 tons of ore assaying 17% lead, to (43) or (53).

41. Wilfley table. From (40); delivers concentrates to (44), middlings to (58), 40 tons of tailings, assaying 2.1% lead, to (85), and slimes, assaying 13% lead, to (42).

42. V-shaped settling tank. From (41); delivers spigot to (57) and overflow to waste.

43. Twenty-four vanners. From (40); deliver concentrates to (44) and 40 tons of tailings, assaying 9% lead, to (57).

44. Two 2-inch centrifugal pumps. From (35), (37), (41), and (43); deliver to (45).

45. Two Wilfley tables. Used for grading. From (44); deliver concentrates to (49), tailings to (58), and slimes to (50).

46. Ore bin for first-class concentrates. Receives ore, running 77% lead, from (23), (25), (26), and (27); delivers to smelter and drainings to (53).

47. Ore bin for second-class concentrates. Receives ore, averaging 44% lead, from (16), (19), and (21); delivers to smelter and drainings to (53).

48. Ore bin for third-class concentrates. Receives ore, averaging 55% lead, from (23), (25), and (27); delivers to smelter and drainings to (53).

49. Ore bin for first-class concentrates. Receives ore, assaying 77% lead, from (35) and (45); delivers to smelter and drainings to (51).

50. Ore bin for second-class concentrates. From (35), (37), and (45); delivers to smelter and drainings to (51).

51. Slimes bin. From (49) and (50); delivers to smelter and drainings to (52).

52. No. 1 slimes trap. From (51); delivers settlings to smelter and overflow to (53).

53. No. 2 slimes trap. From (40), (46), (47), (48), and (52); delivers settlings to smelter and overflow to waste.

Elevator House.

54. Slough-off tank. From (29); delivers spigot to (55) and overflow to (56).

55. Classifier with 2 spigots. From (54); delivers spigots to (58) and overflow to (56).

56. Pulp thickener, a square tank with a goose-neck discharge. From (54) and (55); delivers spigots to (57) and overflow to waste.

57. Traylor 3-inch centrifugal pump having a 36-foot lift. From (42), (43), and (56); delivers 45 tons of ore, assaying 9% lead, to (59).

58. Elevator with 7 × 15-inch pressed steel buckets and 36-inch pulleys. From (25), (26), (27), (37), (39), (41), (45), and (55); delivers 140 tons of ore, assaying 7.5% lead, to (60).

North or Middlings Re-treatment Mill.

59. Eight Callow settling-tanks. From (57); deliver overflows to waste and spigots to (62).

60. Slough-off tank. From (58); delivers spigot to (66) and overflow to (61).

61. Pulp thickener, a square tank having a goose-neck discharge. From (60); delivers overflow to waste and spigots to (66).

62. Traylor 3-inch centrifugal pump. From (59) and (81); delivers to (63).

63. Two sand traps. From (62); deliver overflows to (64) and spigots to (65).

64. Sixteen 6-foot vanners. From (63); deliver concentrates to (86) and tailings, assaying 7% lead, to (87).

65. Two Wilfley tables for treating fine sand. From (63); deliver concentrates to (86), middlings to (82), tailings to (87), and slimes to (81).

66. Elevator, 16 inches wide, 8-ply belt, 7 × 15-inch pressed steel buckets, 37-inch pulleys, 45 feet between centers, and having a belt speed of 387 feet per minute. From (60) and (61); delivers to (67).

67. Slough-off tank. From (66); delivers overflow to (81) and spigot to (68).

68. Twenty-four inch duplex Callow screen,[29] 27 mesh, 28 wire. From (67); delivers undersize to (77) and oversize to (69).

69. Four 6-foot Huntington mills. Two mills are used and two held in reserve. They make 65 revolutions per minute and crush through 20 mesh. From (68), (72), and (84); deliver pulp to (70).

70. Elevator. From (69); delivers to (71).

71. Slough-off tank. From (70); delivers overflow to (81) and spigot to (72).

72. Twenty-four inch duplex Callow screen, 24 mesh, 26 wire. From (71); delivers oversize to (69) and undersize to (73).

73. Hydraulic classifier with 3 spigots. From (72); delivers spigots to (75) and overflow to (74).

74. Two Callow settling-tanks. From (73); deliver overflows to waste and spigots to (75).

75. Four pocket launders. From (73) and (74); deliver to (76).

76. Eleven Wilfley tables. From (75); deliver concentrates to (86), middlings to (82), tailings, assaying 3% lead, to (87), and slimes to (81).

77. Hydraulic classifier with 3 spigots. From (68); delivers spigots to (79) and overflow to (78).

78. Two Callow settling-tanks. From (77); deliver overflows to waste and spigots to (79).

79. Four pocket-launders. From (77) and (78); deliver to (80).

80. Eight Wilfley tables. From (79); deliver concentrates to (86), middlings to (82), tailings, assaying 3% lead, to (87), and slimes to (81).

81. Eight Callow settling-tanks. From (65), (67), (71), (76), and (80); deliver overflows to waste and spigots to (62).

82. One 2-inch centrifugal pump. From (65), (76), and (80); delivers to (83).

83. Pocket launder. From (82); delivers to (84).

84. Three Wilfley tables for re-treating middlings. From (83); deliver concentrates to (86), middlings to (69), and tailings, assaying 3% lead, to (87).

85. Elevators for tailings from the South mill. From (16), (19), (21), (23), (25), (26), (27), and (41); deliver 600 tons of tailings, assaying 2.1% lead, to coarse-tailings dump.

86. Bins for concentrates of North mill. From (64), (65), (76), (80), and (84). Receive 17 tons of concentrates assaying 43% lead. Deliver to smelter.

87. Waste dump for tailings from North mill. From (64), (65), (76), (80), and (84). Receives 168 tons of tailings assaying 4.5% lead.

The coarse tailings from the South mill will be worked over some time in the future by the North mill which was built for this special purpose, although it is at present used to help out the South mill. The fine tailings from both mills go to waste.

The mills, supposed to run continuously, have been shutting down lately about twice a month for general repairs and holidays. They average 27 days a month of continuous running.

There are on each shift; 1 shift-boss, 4 jig men, 2 vanner men, 3 Huntington mill men, 3 oilers, and, on the day shift, 2 foremen, 3 rock house men, 1 ore picker, 2 roustabouts, 1 blacksmith, 1 helper, and 1 sampler, besides the superintendent.

The wages are $3.50 for machine men and $3 per shift for oilers and helpers.

Power.

The mill uses about 550 horse-power, of which about 400 is furnished by motors.

§ 1453. MILL NO. 121. FEDERAL MINING AND SMELTING COMPANY, MACE MILL, NO. 1. WALLACE, IDAHO. — The capacity of this plant is 450 tons per 24 hours.[127] The ore consists of the minerals; argentiferous galena, pyrite and sphalerite in a gangue of quartzite and some quartz. All the minerals except the sphalerite are of economic importance. The problem is to save the silver and lead without the zinc values.

The ore, hauled 3.5 miles in railroad cars, is delivered to a new sorting plant in which 25 tons of high-grade shipping ore and 55 tons of waste are picked out daily, and the milling ore goes to (1).

1. Bin with a capacity of 800 tons. From the sorting plant; delivers to (2).

2. Conveyor. From (1); delivers to (3).

3. Breaker making 100 revolutions per minute. From (2); delivers crushed ore to (4).

4. Automatic sampler which cuts out a sample every 6 minutes. From (3); delivers sample to assayer and reject to (5).

5. Bin with a capacity of 300 tons. From (4); delivers to (6).

6. Rolls, 12 × 36 inches, making 60 revolutions per minute, and crushing to 1 inch. Shells last from 3 to 4 months. From (5); deliver crushed ore to (7).

7. Fourteen-inch elevator with a 10-ply belt having a speed of 450 feet per minute and 7 × 12-inch buckets which elevate 500 tons per 24 hours, 90 feet. From (6), (10), and (13); delivers to (8).

8. Trommel with 15-millimeter round holes having a slope of 0.5 inch to the foot and making 19 revolutions per minute. From (7); delivers oversize to (9) and undersize to (11).

9. Four 2-compartment bull jigs with sieves having 6-millimeter round holes in sheet steel. The plungers make 150 2.5-inch strokes per minute. Each handles 20 tons per 24 hours. From (8), fed with 25.4 to 15-millimeter stuff; deliver side discharges from one sieve to (39), middlings to (10), and tailings to waste.

10. Rolls, 12 × 36 inches, making 80 revolutions per minute and crushing to 10 millimeters. Shells last from 3 to 4 months. Handle 300 tons per 24 hours. From (9); deliver crushed ore to (7).

11. Trommel with 10-millimeter round holes and other details as in (8). From (8); delivers oversize to (12) and undersize to (14).

12. Two 3-compartment jigs with sieves having 3-millimeter round holes in sheet steel. The plungers make 180 2-inch strokes per minute. Each handles 15 tons per 24 hours. From (11), fed with 15 to 10-millimeter stuff; deliver side discharges from 2 sieves to (39), middlings to (13), and tailings to waste.

13. Rolls, 12 × 24 inches, making 100 revolutions per minute and crushing to 7 millimeters. Shells last 5 months. Handle 150 tons per 24 hours. From (12); deliver crushed ore to (7).

14. Trommel with 7-millimeter round holes and other details as in (8). From (11); delivers oversize to (15) and undersize to (18).

15. Two 4-compartment jigs with wire-cloth sieves having 8 meshes to the inch. The plungers make 210 1-inch strokes per minute. Each handles 12 tons per 24 hours. From (14), fed with 10 to 7-millimeter stuff; deliver side discharges from 2 sieves to (39), middlings to (16), and tailings to waste.

16. Rolls, 10 × 30 inches, making 80 revolutions per minute, and crushing to 4 millimeters. Shells last 12 months. Handle 70 tons per 24 hours. From (15) and (19); deliver crushed ore to (17).

17. Fourteen-inch elevator with details as in (7). From (16), (24), and (27); delivers to (20).

18. Trommel with 4-millimeter round holes and other details as in (8). From (14); delivers oversize to (19) and undersize to (22).

19. Two 4-compartment jigs with wire-cloth sieves having 8 meshes to the inch. The plungers make 240 0.875-inch strokes per minute. Each handles 12 tons per 24 hours. From (18), fed with 7 to 4-millimeter stuff; deliver side discharges from 2 sieves to (39), middlings to (16), and tailings to waste.

20. Trommel with 2.5-millimeter round holes and other details as in (8). From (17); delivers oversize to (21) and undersize to (25).

21. Two 3-compartment jigs with wire-cloth sieves having 8 meshes to the inch. The plungers make 250 0.75-inch strokes per minute. Each handles 12 tons per 24 hours. From (20), fed with 4 to 2.5-millimeter stuff; deliver side discharges from 2 sieves to (39), middlings to (24). No tailings are made.

22. Classifier with 2 spigots. From (18); delivers spigots to (23) and overflow to (33).

23. Two 4-compartment jigs, with brass wire-cloth sieves having 12 meshes to the inch. The plungers make 280 0.5-inch strokes per minute. Each handles 12 tons per 24 hours. From (22), fed with 4 to 0-millimeter stuff; deliver bottom discharges from 2 sieves to (39), middlings to (24), and tailings to waste.

24. One 5-foot Huntington mill making 70 revolutions per minute and crushing through slot-punched steel screens having 20 holes to the inch. The screens last about 5 days. The mill under the above conditions handles 45 tons per 24 hours and requires 12 horse-power. From (21) and (23); delivers pulp to (17).

25. Classifier with 4 spigots. From (20); delivers spigots to (26) and overflow to (28).

26. Four 4-compartment jigs with brass wire-cloth sieves having 12 meshes to the inch. The plungers make 340 0.375-inch strokes per minute. Each handle 12 tons per 24 hours. From (25), fed with 2.5 to 0-millimeter stuff; deliver bottom discharges from 2 sieves to (39), middlings to (27). No tailings are made.

27. One 5-foot Huntington mill with details as in (24). From (26); delivers pulp to (17).

28. Settling tank with 5 spigots. From (25); delivers spigots to (29) and (30) and overflow to (35).

29. Three Wilfley tables making 235 thrusts per minute. From (28); deliver concentrates to (39) and middlings and tailings to (31).

30. Two vanners making 200 thrusts per minute. From (28); deliver concentrates to (39) and tailings to (37).

31. Settling tank with 4 spigots. From (29) and (34); delivers spigots to (32) and overflow to waste.

32. Four Wilfley tables making 225 thrusts per minute. From (31); deliver concentrates to (39) and tailings to waste.

33. Settling tank with 3 spigots. From (22); delivers spigots to (34) and overflow to (35).

34. Three Wilfley tables making 235 thrusts per minute. From (33); deliver concentrates to (39) and middlings and tailings to (31).

35. Settling tank with 10 spigots. From (28) and (33); delivers spigots to (36) and overflow to (37).

36. Ten vanners making 195 thrusts per minute. From (35); deliver concentrates to (39) and tailings to (37).

37. Settling tank with 4 spigots. From (30), (35), and (36); delivers spigots to (38) and overflow to waste.

38. Four vanners making 200 thrusts per minute. From (37); deliver concentrates to (39) and tailings to waste.

39. Concentrates shipping-bin. From (9), (12), (15), (19), (21), (23), (26), (29), (30), (32), (34), (36), and (38); delivers, via railroad cars, to smelter.

The tailings run about 2% in zinc.

The mill operates 3 shifts per 24 hours and 7 days a week. The wages for mill men are $3.50 per 8-hour shift.

All jig sieves last about 4 months.

§ 1454. MILL NO. 122. MORNING MILL, FEDERAL MINING AND SMELTING COMPANY, MULLAN, IDAHO.[127] — This plant has a capacity of 300 tons per 24 hours and was installed to re-treat jig tailings.[3] The problem is to save the lead. The tailings are fed to (1).

1. One Huntington mill making 65 revolutions per minute and requiring 30 horse-power to crush through 30 mesh when handling 300 tons per 24 hours. Rings last 3 months; mullers, 40 days; and screens, 4 days. From the tailings pile with 400 gallons of water per minute from (9); delivers pump to (2).

2. One 8-foot Callow conical sloughing-off tank [29] made of 0.125-inch steel. From (1); delivers spigot, which is made up of 240 tons of ore per 24 hours and 160 gallons of water per minute, to (3) and the overflow, which consists of 60 tons of ore per 24 hours and 240 gallons of water per minute, to (6).

3. Three 24-inch, 80-mesh, duplex Callow screens having speeds of 20 feet per minute and a life of 40 days. From (2) with 36 gallons of wash water per minute and 60 gallons of water per minute to carry off the oversize from (9); deliver the oversize, which consists of 123 tons of ore per 24 hours and 60 gallons of water per minute, to (4) and the undersize, which consists of 117 tons of ore per 24 hours and 196 gallons of water per minute, to (5).

4. Three 6 × 16-foot Wilfley tables making 240 0.75-inch throws per minute and requiring approximately 1 horse-power each. From (3) and (4) with 30 gallons of wash water per minute from (9); deliver 2 tons of concentrates per 24 hours to (10), 16 tons of middlings per 24 hours to (4), 105 tons of tailings per 24 hours to (11), and 75 gallons of backwater per minute to (8).

5. Ten Wilfley tables with 0.625-inch throws and other details as in (4). From (3) with 50 gallons of wash water per minute from (9); deliver 10 tons of concentrates per 24 hours to (10), 94 tons of tailings per 24 hours to (11), and 13 tons of ore per 24 hours in the slime water, which amounts to 190 gallons per minute, to (6).

6. Ten 8-foot Callow conical tanks made of 0.125-inch steel. From (2) and (5); deliver the spigots, which consist of 73 tons of ore per 24 hours and 86 gallons of water per minute, to (7) and the overflows, which carry 344 gallons of water per minute, to (8).

7. Ten Chalmers and Williams 6-foot vanners making 205 1-inch throws per minute and requiring 0.75 horse-power each. From (6) with 50 gallons of

wash water per minute from (9); deliver 2 tons of concentrates per 24 hours to (10) and 71 tons of tailings per 24 hours to (11).

8. Centrifugal pump requiring 3 horse-power to elevate 419 gallons of water per minute against a head of 18 feet. From (4) and (6); delivers 419 gallons of water per minute to (9).

9. Water tank. Receives 419 gallons of water per minute from (8) and 207 gallons per minute from the water main; delivers 626 gallons of water per minute to (1), (3), (4), (5), and (7).

10. Concentrates bin. Receives 14 tons per 24 hours which will run approximately 45.0% in lead. From (4), (5), and (7); delivers, via cars, to smelter.

11. Tailings launder. From (4), (5), and (7); delivers 270 tons per 24 hours to the tailings dump.

Labor and Wages.

The mill is operated 3 shifts a day for 7 days a week. Three men are employed on each shift at $3.50 each per shift.

Power.

The power is divided up as follows:

1 Huntington mill	at	30.0	horse-power	30.0
13 Wilfley tables	at	1.23	" "	16.0
10 Vanners	at	0.75	" "	7.5
1 Pump	at	3.0	" "	3.0
Total				56.5

§ 1455. MILL NO. 123. HECLA MINING COMPANY, BURKE, IDAHO.[122] — The Hecla mill has a capacity of about 250 tons per 24 hours. The Hecla vein follows a narrow basalt dike for its entire length.[3] Mineralization has taken place along the walls of the dike and in many cases replaced the basalt by galena. The economic minerals are argentiferous galena, sphalerite, and pyrite in a gangue of quartz and basalt. Near the surface, carbonates and oxides of iron and manganese with native silver occur. The average ores of the district will perhaps run 10% lead and 7 ounces silver per ton. The problem is to concentrate and save the argentiferous galena.

Ore from the mine goes to (1).

1. Grizzly with 4-inch spaces between the bars. From the mine; delivers oversize to (2) and undersize to (3).

2. Sorting platform. From (1); delivers clean galena to smelter, clean waste rock to mine, and milling ore to (5).

3. Grizzly with 2-inch spaces between the bars. From (1); delivers oversize to (4) and undersize to (6).

4. Hand-sorting belt. From (3); delivers clean galena to smelter, clean waste rock to mine, and milling ore to (5).

5. Rock breaker with a jaw opening 9 × 15 inches breaking to 2 inches. From (2) and (4); delivers crushed ore to (6).

6. Mill bin. From (3) and (5); delivers to (7).

7. Trommel with punched holes 25 millimeters in diameter. From (6); delivers oversize to (8) and undersize to (9).

8. Coarse rolls, 15 × 26 inches, crushing to 25 millimeters. Cast-iron shells with an average life of 14 weeks, faced once. From (7); deliver crushed ore to (9).

9. Elevator. From (7), (8), (12), and (17); delivers to (10).

10. Trommel with punched holes 18 millimeters in diameter. From (9); delivers oversize to (11) and undersize to (13).

11. Four jigs with 2 compartments each. From (10), fed with 25 to 18-

millimeter stuff; deliver clean galena concentrates to smelter, middlings to (12), and tailings to waste in creek.

12. Medium rolls, 15 × 26 inches. Cast-steel shells with an average life of 1 year. From (11) and (14); deliver crushed ore to (9).

13. Trommel with punched holes 12 millimeters in diameter. From (10); delivers oversize to (14) and undersize to (15).

14. Two jigs with 2 compartments each. From (13), fed with 18 to 12-millimeter stuff; deliver clean galena concentrates to smelter, middlings to (12), and tailings to waste in creek.

15. Trommel with punched holes 7 millimeters in diameter. From (13); delivers oversize to (16) and undersize to (18).

16. Three jigs with 3 compartments each. From (15), fed with 12 to 7-millimeter stuff; deliver clean galena concentrates to smelter, middlings to (17), and tailings to waste in creek.

17. Fine rolls, 12 × 24 inches. Cast-steel shells with an average life of 1 year. From (16); deliver crushed ore to (9).

18. Trommel with punched holes 3 millimeters in diameter. From (15); delivers oversize to (19) and undersize to (20).

19. Two jigs with 4 compartments each. From (18), fed with 7 to 3-millimeter stuff; deliver clean galena concentrates to smelter, middlings to (22), and tailings to waste in creek.

20. Twenty-mesh duplex Callow screen.[29] Screen belts 24 inches wide. One screen belt takes all the feed and the other is held in reserve. From (18); delivers oversize to (21) and undersize to (23).

21. Three jigs with 4 compartments each. Sieves are 20.5 × 35.5 inches and 6-mesh. From (20), fed with 3-millimeter to 20-mesh stuff; deliver clean galena concentrates to smelter, middlings to (22), and tailings to waste in creek.

22. One 5-foot Huntington mill making 90 revolutions per minute and requiring 18 horse-power with full load. Roller rings last 3 months and 1 set of die rings last 6 weeks. Crushes through 30-mesh screen. From (19) and (21); delivers crushed pulp to (23).

23. Fourteen-inch elevator with a 10-ply belt having a speed of 377 feet per minute and buckets 16 inches apart. From (20) and (22); delivers to (24).

24. One 4-foot Callow sloughing-off tank made of sheet steel and cone shaped. From (23); delivers spigot to (25) and overflow to (29).

25. Sixty-mesh duplex Callow screen. Screen belts 24 inches wide. Only one belt used, the other being held in reserve. From (24); delivers oversize to (26) and undersize to (27).

26. One Wilfley table making 250 strokes per minute. From (25); delivers clean galena concentrates to smelter and tailings to waste in creek.

27. One 8-foot Callow tank made of sheet steel and cone shaped. From (25); delivers spigot to (28) and overflow to (29).

28. Three Wilfley tables making 250 strokes per minute. From (27); deliver clean galena concentrates to smelter, slimy head waters to (31) and tailings to waste in creek.

29. Vanner feed tank. From (24) and (27); delivers spigots to (30) and overflow to (31).

30. Six Allis-Chalmers 4-foot Frue vanners making 180 strokes per minute. From (29); deliver clean galena concentrates to smelter and tailings to (31).

31. Centrifugal pump. From (28), (29), and (30); delivers to (32).

32. Six Callow settling-tanks. From (31); deliver spigots to (33) and overflows to waste.

33. Four Allis-Chalmers 4-foot Frue vanners making 180 strokes per minute.

From (32); deliver clean galena concentrates to smelter and tailings to waste in creek.

The whole mill requires 125 horse-power.

The value of the jig tailings has been reduced by the Callow installation from 0.61% to 0.23% lead; and the value of the Wilfley tailings has been reduced from 1.31% to 0.35% lead, as shown by monthly averages.

The mill runs 3 shifts a day and 7 days a week. Wages are $3.50 per 8-hour shift.

§ 1456. MILL NO. 124. MILL NO. 3 OF THE FEDERAL LEAD COMPANY, FLAT RIVER, MISSOURI.[100] — The crushing and sampling departments of this mill have capacities of 2,600 tons each per 24 hours.[106] The concentrating department handles 2,400 tons in the same time. The economic mineral is an argentiferous galena. An average analysis of the crude ore milled for the year ending November 30, 1907, follows:

Pb	5.90 percent	Mn	0.465 percent
Cu	0.065 "	CaO	25.30 "
Zn	0.82 "	MgO	14.50 "
S	2.18 "	Al_2O_3	5.755 "
SiO_2	4.565 "	*CO_2	36.025 "
Fe	3.925 "	Ag	0.13 ounce per ton

* CO_2 is calculated considering CaO and MgO as carbonates.

During the 12 months above mentioned 369,901 tons of dry ore were milled. The problem is to save the silver-bearing galena.

Crushing Department.

There are two similar sections in the crushing department, only one of which is described.

The ore comes from the mine in side-discharging cars and is dumped directly to (1).

1. Ore bin with a capacity of 150 tons. Receives run of mine ore via cars, and delivers to (2).

2. Shaking grizzly with 1.75-inch spaces between the bars. Makes 135 2-inch thrusts per minute, has a capacity of 1,300 tons per 24 hours, and requires 2 horse-power. From (1); delivers oversize to (3) and undersize to (4).

3. Farrel-Blake breaker with a jaw opening 24 × 42 inches, set to break to 1.75 inches, making 225 thrusts per minute, and requiring 40 horse-power. From (2); delivers crushed ore to (4).

4. Twenty-two inch belt conveyor having a conveying length of 92 feet, a speed of 288 feet per minute, a capacity of 1,300 tons per 24 hours, elevating the ore 28 feet, and requiring 8 horse-power. From (2) and (3); delivers to (5).

5. Trommel, 3.5 × 12 feet, with steel segments 0.1875 inch thick having 1-inch round holes, a slope of 2 inches to the foot, making 15 revolutions per minute, and requiring 2 horse-power. From (4); delivers oversize to (6) and undersize to (7).

6. Colorado Iron Works geared rolls, 24 × 48 inches, crushing to 0.75 inch, making 35 revolutions per minute, and requiring 26 horse-power. From (5); deliver crushed ore to (7).

7. Twenty-eight inch elevator having a speed of 400 feet per minute, staggered buckets, 7 × 14 inches, set 18 inches apart, elevating the ore 51 feet, handling 1,300 tons per 24 hours, and requiring 9 horse-power. From (5) and (6); delivers to (8).

8. Two trommels, 4 × 12 feet, with 9-millimeter round holes, slopes of 2 inches to the foot, and making 15 revolutions per minute. Each has a working capacity of 650 tons per 24 hours and requires 2 horse-power. From (7); deliver oversize to (9) and undersize to (12).

9. Two sets of Colorado Iron Works geared rolls, 24 × 48 inches, crushing to 9 millimeters, and making 61 revolutions per minute. Each set requires 60 horse-power. From (8) and (11); deliver crushed ore to (10).

10. Two 26-inch elevators having speeds of 400 feet per minute, staggered buckets, 7 × 14 inches, set 18 inches apart and elevating the ore 64 feet. Each requires 4 horse-power. From (9); deliver to (11).

11. Four trommels, 4 × 12 feet, with 9-millimeter round holes, slopes of 2 inches to the foot, and making 15 revolutions per minute. Each requires 1 horse-power. From (10); deliver oversize to (9) and undersize to (12).

Sampling Department.

There is only one section in this department.

12. Twenty-four-inch belt conveyor having a conveying length of 321 feet, a speed of 290 feet per minute, a maximum capacity of 3,600 tons per 24 hours, elevating the ore 63.5 feet, and requiring 9 horse-power. From (8) and (11); delivers to (13).

13. One 9-foot Vezin sampler cutting out 10% of the ore and making 15 revolutions per minute. From (12); delivers sample to (14) and reject to (20).

14. Shaking feeder making 140 1.75-inch strokes per minute and having a maximum capacity of 240 tons per 24 hours. From (13); delivers to (15).

15. One 6.67-foot Vezin sampler with details as in (13). From (14); delivers sample to (16) and reject to (19).

16. Shaking feeder with details as in (14) but handling only 24 tons per 24 hours. From (15); delivers to (17).

17. One 3.34-foot Vezin sampler cutting out 20% of the ore and making 15 revolutions per minute. (13), (14), (15), (16), and (17) requires 2 horse-power. From (16); delivers sample to (18) and reject to (19).

18. One 8-compartment sample bin with a total capacity of 32 tons. From (17); delivers samples to assayer and rejects to (19).

19. Fourteen-inch-elevator having a speed of 300 feet per minute, buckets 14 inches wide, set 18 inches apart, elevating the ore 54 feet, and requiring 2 horse-power. From (15), (17), and (18); delivers to (20).

20. Twenty-four-inch belt conveyor and tripper. The belt has a conveying length of 250 feet, a speed of 300 feet per minute, a maximum capacity of 3,600 tons per 24 hours, elevates the ore 7 feet, and requires 6 horse-power. From (13) and (19); delivers to (21).

Jig and Table Departments.

These departments are divided into 3 sections, one of which is described below. The capacity of the mill from this point is 2,400 tons per 24 hours.

21. Two storage bins, 23 × 28 × 39 feet, each having a capacity of 1,400 tons. From (20); deliver to (22).

22. Two shaking feeders making 60 1.5-inch strokes per minute. Each has a capacity of 400 tons per 24 hours or 4.3 cubic feet per minute and requires 0.5 horse-power. From (21); deliver to (23).

23. Two 14-inch elevators having speeds of 360 feet per minute and elevating the ore 60 feet. Each handles 400 tons per 24 hours and requires 2.1 horse-power. From (22); deliver to (24).

24. Four trommels, 4 × 9 feet, with 7-millimeter round holes, slopes of 1 inch to the foot, and making 20 revolutions per minute. Each handles 200 tons per 24 hours and requires 0.75 horse-power. One hundred and sixty-eight gallons of water per minute are added, 64 gallons to remove the oversize and 104 gallons as spray water. From (23); deliver oversize to (28) and undersize to (25).

25. Four trommels, 3 × 9 feet, with 4-millimeter round holes, slopes of 1 inch to the foot, and making 22 revolutions per minute. Each handles 146.3 tons per 24 hours and requires 0.55 horse-power. One hundred and twenty-eight gallons of water per minute are added, 64 gallons to remove the oversize and 64 gallons as spray water. From (24); deliver oversize to (29) and undersize to (26).

26. Four trommels with 2-millimeter round holes. Each handles 84 tons per 24 hours and requires 0.45 horse-power. One hundred and twenty-four gallons of water per minute are added, 64 gallons to remove the oversize and 60 gallons as spray water. Other details as in (25). From (25); deliver oversize to (30) and undersize to (27).

27. Four Richards' vortex classifers with 3 spigots and 3-inch sorting columns each. Each handles 48.5 tons per 24 hours. Two hundred and sixty-four gallons of water per minute are added, 136 gallons as hydraulic water for the first, 80 gallons for the second, and 48 gallons for the third sorting columns. The first spigots deliver 96 gallons, the second spigots 56 gallons, and the third spigots 56 gallons of water per minute. The overflows carry 284 gallons of water per minute. From (26); deliver first spigots to (31), second spigots to (49), third spigots to (50), and overflows to (72).

28. Eight 1-compartment Harz jigs with sieves, 17.5 × 32.5 inches, of No. 13 steel plate with 7-millimeter round holes. The plungers, 18 × 34 inches, make 155 1.25-inch throws per minute. Each handles 26 tons per 24 hours and requires 0.57 horse-power. Two hundred and forty-eight gallons of water per minute are added. The hutches discharge 120 gallons and the tailings carry 192 gallons of water per minute. From (24); deliver concentrates and hutch products to (62) and tailings to (33).

29. Eight 3-compartment Harz jigs with sieves, 17.5 × 32.5 inches. The first and second sieves are of 4-mesh, 16-wire cloth and the third sieves are of steel plate with 5-millimeter round holes. The plungers, 18 × 34 inches, make 168 strokes per minute. The strokes of the first and second plungers are 0.875 inch and of the third 0.75 inch in length. Each handles 30.2 tons per 24 hours and requires 1.2 horse-power. Three hundred and eighty-four gallons of water are added. The first hutches discharge 72 gallons, the second 96 gallons, and the third 104 gallons of water per minute. The tailings carry 176 gallons of water per minute. From (25); deliver first hutches to (32), second and third hutches to (33), and tailings to (71).

30. Eight 3-compartment Harz jigs with sieves, 17.5 × 32.5 inches. The first sieves are of steel plate with 4-millimeter round holes; the second sieves are of 5-mesh, 16-wire cloth; and the third sieves are of 7-mesh, 17-wire cloth. The plungers, 18 × 34 inches, make 220 strokes per minute. The strokes of the first plungers are 0.75 inch and of the second and third 0.625 inch in length. Each handles 16.7 tons per 24 hours and requires 1.6 horse-power. Two hundred and ninety-six gallons of water per minute are added. The first hutches discharge 64 gallons, the second 64 gallons, and the third 72 gallons of water per minute. The tailings carry 160 gallons of water per minute. From (26); deliver first hutches to (62), second and third hutches to (63), and tailings to (71).

31. Eight 2-compartment Harz jigs with sieves, 17.5 × 32.5 inches, of steel plate. The first sieves have 3-millimeter and the second have 2-millimeter round holes. The plungers, 18 × 34 inches, make 240 strokes per minute. The strokes of the first plungers are 0.5 inch and of the second 0.375 inch in length. Each handles 9.6 tons per 24 hours and requires 1.4 horse-power. One hundred and twenty-eight gallons of water per minute are added. The first hutches discharge 48 gallons and the second 56 gallons of water per minute.

The tailings carry 120 gallons of water per minute. From (27); deliver first hutches to (62), second side discharges and hutch products to (63), and tailings to (71).

32. Two shaking launders, 110 feet long, making 160 1-inch strokes per minute, and requiring 2 horse-power. Common to three sections. From (29); deliver to (62).

33. Dewatering box, 3 × 3.5 × 8 feet. The feed carries 592 gallons of water per minute. From (28), (29), and (41); delivers spigot to (34) and water to (64).

34. Cole shovel-wheel making 13 revolutions per minute and requiring 0.5 horse-power. Delivers 30 gallons of water per minute with the ore and 562 gallons of water per minute, — including the spigot water from (33). From (33); delivers ore to (35) and water to (64).

35. Fourteen-inch elevator having a speed of 405 feet per minute, elevating the ore 36 feet and requiring 1.1 horse-power. From (34); delivers to (36).

36. P. and M. rolls, 16 × 36 inches, making 120 revolutions per minute and requiring 19 horse-power. From (35); deliver crushed ore to (37).

37. Fourteen-inch elevator having a speed of 405 feet per minute, elevating the ore 60 feet, and requiring 1.4 horse-power. From (36); delivers to (38).

38. Two trommels, 4 × 9 feet, with 4-millimeter round holes, slopes of 1 inch to the foot, and making 20 revolutions per minute. Each requires 1.4 horse-power. Sixty-four gallons of water per minute are added, 32 gallons to carry away the oversize and 32 gallons as spray water. From (37); deliver oversize to (41) and undersize to (39).

39. Two trommels, 3 × 9 feet, with 2-millimeter round holes, slopes of 1 inch to the foot, and making 22 revolutions per minute. Each requires 1.1 horse-power. Sixty-two gallons of water per minute are added, 32 gallons to carry away the oversize and 30 gallons as spray water. From (38); deliver oversize to (42) and undersize to (40).

40. Two Richards' vortex classifiers with 3 spigots and 3-inch sorting columns each. One hundred gallons of hydraulic water per minute are added, of which 48 gallons go to the first, 34 gallons to the second, and 18 gallons to the third sorting columns. The first spigots discharge 24 gallons, the second spigots 36 gallons, and the third spigots 20 gallons of water per minute. The overflows carry 112 gallons of water per minute. From (39); deliver first spigots to (48), second spigots to (54), third spigots to (56), and overflows to (43).

41. Eight 3-compartment Harz jigs with sieves, 17.5 × 32.5 inches. The first and second-compartment sieves are of 4 mesh, 16 wire and the third compartment sieves are of steel plate with 5-millimeter round holes. The plungers, 18 × 34 inches, make 175 1-inch strokes per minute. Each handles 20.6 tons per 24 hours and requires 1.2 horse-power. Four hundred and sixteen gallons of water per minute are added. The first hutches discharge 72 gallons, the second hutches 96 gallons, and the third hutches 104 gallons of water per minute. The tailings carry 176 gallons of water per minute. From (38); deliver first hutches to (62), second hutches and third side discharges and hutches to (33), and tailings to (71).

42. Four 3-compartment Harz jigs with sieves, 17.5 × 32.5 inches. The first-compartment sieves are of steel plate and have 4-millimeter round holes; the second-compartment sieves are of 5-mesh, 16-wire cloth; and the third-compartment sieves are of 7-mesh, 17-wire cloth. The plungers, 18 × 34 inches, make 220 strokes per minute. The strokes of the first plungers are 0.75 inch and of the second and third plungers 0.625 inch in length. Each handles 18.3 tons per 24 hours and requires 1.6 horse-power. One hundred and forty-eight gallons of water per minute are added. The first hutches discharge 32 gallons,

the second hutches 32 gallons, and the third hutches 36 gallons of water per minute. The tailings carry 80 gallons of water per minute. From (39); deliver first hutches to (62), second hutches and third side discharges and hutches to (63), and tailings to (71).

43. Spitzkasten with 4 spigots and sides sloping at 65°. The first spigot discharges 14 gallons, the second spigot 14 gallons, the third spigot 11 gallons, and the fourth spigot 11 gallons of water per minute. The overflow carries 198 gallons of water per minute. From (40) and (47); delivers first 2 spigots to (55), last 2 spigots to (57), and overflow to (64).

44. Shaking launder, 30 feet long having a slope of 0.375 inch to the foot and a Federal shaking screen on the end, with 1.5-millimeter round holes. The launder and screen make 240 1-inch throws per minute and require 1 horse-power. The feed carries 80 gallons of water per minute, of which 36 gallons are carried by the oversize and 44 gallons by the undersize. From (63); delivers oversize to (46) and undersize to (59).

45. Two 5-foot Huntington mills crushing through 9-mesh, 17-wire rolled-slot screens, and making 76 revolutions per minute. Each has a capacity of 35 tons per 24 hours and requires 4.5 horse-power. The pulp discharge carries 80 gallons of water per minute. From (63); deliver pulp to (46).

46. Two 5-inch centrifugal sand pumps making 720 revolutions per minute. Only one is run, the other being held in reserve. Each pump requires 9 horse-power when delivering 116 gallons of water per minute against a head of 38 feet. From (44) and (45); deliver to (47).

47. Two Richards' vortex classifiers with 3 spigots and 3-inch sorting columns each. One hundred gallons of hydraulic water per minute are added, of which 48 gallons go to the first, 34 gallons to the second, and 18 gallons to the third sorting columns. The first spigots discharge 24 gallons, the second spigot 36 gallons, and the third spigots 20 gallons of water per minute. The overflows carry 136 gallons of water per minute. From (46); deliver first spigots to (48), second spigots to (54), third spigots to (56), and overflows to (43).

48. Four 2-compartment Harz jigs with sieves, 17.5 × 32.5 inches, of steel plate with 3-millimeter round holes. The plungers, 18 × 34 inches, make 240 strokes per minute. The strokes of the first plungers are 0.5 inch and of the second 0.375 inch in length. Each handles 10.2 tons per 24 hours and requires 1.4 horse-power. Sixty-four gallons of water per minute are added. The first hutches discharge 24 gallons and the second hutches 28 gallons of water per minute. The tailings carry 60 gallons of water per minute. From (40) and (47); deliver first hutches to (62), second side discharges and hutches to (63), and tailings to (71).

49. Four No. 5 Wilfley tables making 250 strokes per minute. Each handles 7.5 tons per 24 hours and requires 0.3 horse-power. Twenty-four gallons of water per minute are added. The concentrates carry 2 gallons, the middlings 4 gallons, and the tailings 74 gallons of water per minute. From (27); deliver concentrates to (61), middlings to (58), and tailings to (71).

50. Four No. 5 Wilfley tables with power, speed, water, and capacity details as in (49). From (27); deliver concentrates to (61), middlings to (58), and tailings to (71).

51. Four No. 5 Wilfley tables making 260 strokes per minute with power, water, and capacity details as in (49). From (72); deliver concentrates to (61), middlings to (60), and tailings to (71).

52. Two C. and W. 6-foot plain-belt Frue vanners making 196 strokes per minute and having a speed of about 3 feet per minute. Each handles 5.3 tons per 24 hours and requires 0.2 horse-power. Four gallons of wash water per minute are added. The concentrates carry 0.5 gallon and the tailings 36.5 gal-

lons of water per minute. From (72); deliver concentrates to (61) and tailings to (71).

53. One C. and W. 6-foot plain-belt Frue vanner with details as in (52). Two gallons of wash water per minute are added. The concentrates carry 0.25 gallon and the tailings 18.25 gallons of water per minute. From (72); deliver concentrates to (61) and tailings to (71).

54. Eight No. 5 Wilfley tables making 250 strokes per minute with details as in (49). Forty-eight gallons of water per minute are added. The concentrates carry 4 gallons, the middlings 8 gallons, and the tailings 108 gallons of water per minute. From (40) and (47); deliver concentrates to (61), middlings to (58), and tailings to (71).

55. Two No. 5 Wilfley tables making 260 strokes per minute with details as in (49). Twelve gallons of water per minute are added. The concentrates carry 1 gallon, the middlings 2 gallons, and the tailings 43 gallons of water per minute. From (43); deliver concentrates to (61), middlings to (60), and tailings to (71).

56. Two No. 5 Wilfley tables with details of power and water as in (55). From (40) and (47); deliver concentrates to (61), middlings to (60), and tailings to (71).

57. One C. and W. 6-foot plain-belt Frue vanner with details of power and water as in (53). Handles 6.7 tons per 24 hours. From (43); delivers concentrates to (61) and tailings to (71).

58. Two No. 5 Wilfley tables with details of power and capacity as in (49). Twelve gallons of water per minute are added. From (49), (50), and (54). deliver concentrates to (61) and tailings to (71).

59. One 8-foot Callow cone-classifier. The spigot discharge carries 22 gallons and the overflow 150 gallons of water per minute. From (44) and (63); delivers spigot to (60) and overflow to (64).

60. One No. 5 Wilfley table with details of power and capacity as in (49). Six gallons of water per minute are added. From (51), (55), (56), and (59); delivers concentrates to (61) and tailings to (71).

From this point there is but one section for the mill.

61. Three 2.5-inch centrifugal pumps. Each handles 13 gallons of water per minute and requires 6 horse-power. From (49), (50), (51), (52), (53), (54), (55), (56), (57), (58), and (60); deliver to (69).

62. Two Garland wire-rope 7-inch disc conveyors with conveying lengths of 185 feet and speeds of 130 feet per minute. Each requires 2.3 horse-power. From (28), (30), (31), (32), (41), (42), and (48); deliver slimes concentrates to (67) and clean concentrates to (68).

63. Three dewatering boxes with 2 spigots each. The first spigots discharge 80 gallons, the second spigots 128 gallons, and the overflows 80 gallons of water per minute. From (30), (31), (42), and (48); deliver first spigots to (45), second spigots to (59), and overflows to (44).

64. Mill supply sump. Receives 2,914 gallons of water per minute, of which 270 gallons is make-up water coming from the mines. From (33), (34), (43), (59), and (67); delivers to (65).

65. Three DeLaval centrifugal pumps making 1,720 revolutions per minute. Each requires 58 horse-power to lift 1,500 gallons of water per minute against a head of 100 feet. From (64); deliver to (66).

66. One 100,000-gallon storage tank. From (65); delivers to mill system.

67. Ten slimes-concentrates settling tanks, 2 × 10 × 12 feet, with steam pipes in the bottoms. From (62); deliver slimes to smelter and overflows to (64).

68. Two 120-ton concentrates bins. From (62) and (69); deliver concentrates to smelter and slimes to (70).

69. Table concentrates tank. From (61); delivers slimes to (70) and concentrates to (68).

70. Two slimes-concentrates settling tanks, 3 × 16 × 16 feet, with steam pipes in the bottoms. From (68) and (69); deliver pulp to (74).

71. Automatic tailings sampler. From (29), (30), (31), (41), (42), (48), (49), (50), (51), (52), (53), (54), (55), (56), (57), (58), (60), and (72); delivers sample to assayer and reject to (73).

72. Two 4-spigot Spitzkasten with sides sloping at 65° (in each of the 3 sections). The first spigots discharge 28 gallons, the second spigots 28 gallons, the third spigots 22 gallons, the fourth spigots 22 gallons, and the overflows 184 gallons of water per minute. From (27); deliver first 2 spigots to (51), third spigots to (52), fourth spigots to (53), and overflows to (71).

73. Tailings-settling box, 13 × 23 × 26 feet. Receives 1,579 gallons of water per minute. The overflow carries 1,549 gallons and the settlings 30 gallons of water per minute. From (71); delivers settlings to (78) and overflow to (74).

74. Eighteen annular-overflow settling tanks, 20 × 20 feet. The overflows carry 1,309 gallons and the spigots 240 gallons of water per minute. From (70) and (73); deliver spigots to (76) and overflows, via sump, to (75) or waste.

75. Two 8-inch Worthington centrifugal pumps. Each pump requires 36 horse-power to lift 840 gallons of water per minute against a head of 45 feet. From (74); deliver to mill system.

76. Forty-eight canvas tables, 12 × 14 feet, made of 18-ounce duck, and sloping 1.56 inches to the foot. From (74); deliver concentrates to (77) and tailings to waste.

77. Two slimes-concentrates tanks, 10 × 35 feet, with steam pipes in the bottoms. From (76); deliver to smelter.

78. Riblet aerial tram, 2,500 feet between the terminals, having a speed of 235 feet per minute, an 8-foot gauge, and 34 buckets, each having a capacity of 22 cubic feet and carrying 2,330 pounds of ore.

Cables.	Loaded track	2.25 inch	6 strand	25 wire
	Return "	1.25 "	6 "	19 "
	Traction "	0.875 "	5 "	9 "

Requires 30 horse-power. From (73); delivers to waste.

An average analysis of the concentrates obtained for the year ending November 30, 1907, follows:

Pb	63.675 percent	Mn	0.33 percent
Cu	0.45 "	CaO	4.98 "
Zn	1.705 "	MgO	2.935 "
S	13.35 "	Al_2O	1.29 "
SiO_2	0.64 "	*CO	7.055 "
Fe	3.16 "	Ag	1.025 ounces per ton

* CO_2 calculated considering CaO and MgO as carbonates.

Out of 369,901 tons of dry crude ore milled during the 12 months above mentioned, 28,468 tons of dry concentrates were produced, which assayed 63.7% in lead and represented a saving of 83.1%. Table 543 gives the approximate distribution of products with corresponding assay values.

TABLE 543. — APPROXIMATE DISTRIBUTION OF ORE, CONCENTRATES, MIDDLINGS, AND TAILINGS. MILL 124.

Machine.	Ore.			Concentrates.			Middlings.			Tailings.			Recovery in Concentrates. Weight. Percent of Original.
		Lead.		Lead.			Lead.			Lead.			
	Tons. Dry Weight. 24 Hours.	Assay. Percent.	Contents. Pounds.	Pounds. Dry Weight. 24 Hours.	Assay. Percent.	Contents. Pounds.	Pounds. Dry Weight. 24 Hours.	Assay. Percent.	Contents. Pounds.	Pounds. Dry Weight. 24 Hours.	Assay. Percent.	Contents. Pounds.	
9-millimeter jigs	625.0	2.75	34,375	14,713	51.90	81,645	1,235,287	2.08	25,730	.....	.....	.....	25.10
7 " "	725.0	4.76	69,085	52,000	68.70	35,700	320,000	7.40	23,674	1,078,000	0.90	9,711	51.70
4 " "	400.0	7.00	56,000	55,000	70.70	38,880	260,000	5.09	13,232	485,000	0.80	3,888	69.40
2 " "	230.0	9.00	41,400	51,100	70.60	36,072	160,000	1.63	2,601	248,900	1.09	2,727	87.10
Wilfley tables	300.0	8.00	48,000	64,000	58.10	37,170	80,000	5.54	4,432	456,000	1.40	6,398	77.40
6-foot vanners	48.0	7.52	7,220	7,000	65.00	4,550	.....	.....	.....	89,000	3.00	2,670	63.00
Oversize jigs, re-grind	500.0	2.10	21,000	18,500	55.30	10,233	140,000	1.68	2,342	841,500	1.00	8,425	48.70
4-millimeter jigs, re-grind	220.0	4.00	17,600	19,000	64.40	12,240	100,000	3.11	3,106	321,000	0.70	2,254	69.50
2 " " "	122.6	6.05	14,834	17,493	66.00	11,543	50,000	2.97	1,486	177,794	1.01	1,803	77.80
Wilfley tables, re-grind	310.0	3.32	20,579	26,000	51.90	13,502	.....	.....	.....	594,000	1.19	7,077	65.60
6-foot vanners	20.0	6.47	2,590	2,500	65.00	1,625	.....	.....	.....	37,500	2.57	967	62.70
Totals	3,500.6	.....	332,683	327,306	64.20	210,160	2,345,287	3.27	76,603	4,328,694	1.06	45,920	82.07
Deduct middlings	1,172.6	.....	76,603	.....	.....	.....	.....	.....	.....	.....	.....	.....	.....
Canvas tables	.....	.....	.....	14,134	35.00	4,947	.....	.....	.....	.....	.....	.....	.....
Totals and averages	2,328.0	5.50	256,080	341,440	63.00	215,107	.....	.....	.....	4,314,560	0.95	40,973	84.00

Assumed for calculation:
Moisture ..... 3.0 percent.
Assay of ore ..... 5.5 "
" " concentrates ..... 63.0 "
Recovery ..... 84.0 " Including canvas tables.
NOTE. — Assays are given in two places of decimals only.

The mill operates three 8-hour shifts per day, 6 days a week. There are employed about 56 men per shift at an average wage of $1.72 per shift.

Power Plant.

The power plant supplies compressed air for the various mines and electricity for the mill. The equipment consists of six 450-horse-power Heine water-tube boilers, set in two batteries. The steam for the air compressors is taken directly from the steam headers, and steam for the turbines is passed through Foster superheaters which are fired separately. The engine-room contains 3 Nordberg air compressors with steam cylinders, 16 and 32 inches in diameter, and 42-inch strokes; air cylinders, 17.25 and 28 inches in diameter, and running, nominally, at 90 revolutions per minute. Each compressor is fitted with a Wheeler surface-condenser. The electrical equipment comprises three 500-Kilowatt, 3-phase, 440-volt, 60-cycle, Curtis turbine generators, each fitted with Wheeler surface-condensers. One steam-driven exciter and one motor exciter, together with a 10-panel switchboard fitted with a Turrell Voltage regulator, meters, etc., complete the equipment.

The power input to all motors is at 440 volts.

The power, as distributed throughout the flow-sheet (see Table 544), is under conditions of normal load only.

Water.

For a summary giving the number of gallons of water used by each machine see Table 545. Table 546 gives a summary of the water circulation.

TABLE 544. — POWER SUMMARY FOR MILL 124.

Department.	Number of Motors.	Horse-power Each.	Make.	Total Horse-power.	Operating Average.	Power Factor.	Amperes.
Crushing plant	2	250	General Electric	500	482	.79	600
Conveying and sampling plant	1	50	" "	50	28	.76	36
Jig room and elevators	6	50	" "	300	294	.91	316
Rolls	3	25	" "	75	57	.72	78
Huntington mills and pump	3	50	Allis-Chalmers	150	108	.88	120
Table room	6	20	General Electric	120	72	.60	117
Concentrates conveyor	1	10	" "	10	9	.80	11
Shaking launder	5	3	" "	15	5	.55	18
Aerial tramway	1	35	" "	35	30	.81	36
Totals and averages	28	.....	.....	1,255	1,085	.80	1,332
Water Data (2 sections of mill operating)	3	75	General Electric	225	.....	.93	122
Power required by mill-supply and return water-pump	2	40	Westinghouse	80	.....	.82	43

TABLE 545. — SUMMARY OF WATER USED IN GALLONS PER MACHINE.

Machine.	Number per 2 Sections.	Spray.	Over-size.	Water Received with Ore.	Spigot.			Tailings.		Sizing.					
					First Concentrates.	Second Middlings.	Third Middlings.	To Dewatering Box.	To Tailings Settling-Box.	First Spigot to 2-millimeter Jigs.	Second Spigot to Wilfleys.	Third Spigot to Wilfleys.	Overflow to Spitzkasten.	Average Hydraulic per Plunger.	Clear Wash Water.
7-millimeter trommels, 48 by 108 inches	4	26	16	.....	.....	.....	.....	.....	.....	.....	.....	.....	.....	.....	.....
4 " " 36 by 108 "	4	16	16	26.0	.....	.....	.....	.....	.....	.....	.....	.....	.....	.....	.....
2 " " 36 by 108 "	4	15	16	42.0	.....	.....	.....	.....	.....	.....	.....	.....	.....	.....	.....
Richards' 3-spigot vortex classifiers with 3-inch sorting columns	4	.....	.....	57.0	.....	.....	.....	.....	.....	34	20	12	71	.....	.....
9 7-millimeter jigs, 1 compartment, sieves 17.5 by 32.5 inches	8	.....	.....	8.0	15	.....	.....	24	.....	.....	.....	.....	.....	31.00	.....
7 4 millimeter jigs, 3 compartment, sieves 17.5 by 32.5 inches	8	.....	.....	8.0	9	12	13	.....	22	.....	.....	.....	.....	16.00	.....
4 2-millimeter jigs, 3 compartment, sieves 17.5 by 32.5 inches	8	.....	.....	8.0	8	8	9	.....	20	.....	.....	.....	.....	12.33	.....
0 2-millimeter jigs, 2 compartment, sieves 17.5 by 32.5 inches	8	.....	.....	12.0	6	7	.....	.....	15	.....	.....	.....	.....	8.00	.....
Number 5 Wilfley tables	12	.....	.....	14.0	.....	.....	.....	.....	.....	.....	.....	.....	.....	.....	6
6 foot C. and W. vanners	4	.....	.....	16.5	.....	.....	.....	.....	.....	.....	.....	.....	.....	.....	2
4 millemeter re-grind trommels, 48 by 108 inches	2	16	16	1.5	.....	.....	.....	.....	.....	.....	.....	.....	.....	.....	.....
2 " " " 36 by 108 "	2	15	16	31.0	.....	.....	.....	.....	.....	.....	.....	.....	.....	.....	.....
Richards' 3-spigot vortex classifiers with 3-inch sorting columns, re-grind	4	.....	.....	52.0	.....	.....	.....	.....	.....	24	17	9	62	.....	.....
Over-size jigs, re-grind, 3 compartment	8	.....	.....	4.0	9	12	13	.....	22	.....	.....	.....	.....	17.34	.....
4 2-millimeter jigs, re-grind, 3 compartment	4	.....	.....	8.0	8	8	9	.....	20	.....	.....	.....	.....	12.33	.....
0 2 " " " 2 "	4	.....	.....	12.0	6	7	.....	.....	15	.....	.....	.....	.....	8.00	.....

NOTE. — Re-grind and middlings, Wilfleys, not listed.

TABLE 546. — SUMMARY OF WATER CIRCULATION.

Machine.	Number per 2 Sections.	Fresh Water per Machine. Gallons per Minute.	Total Fresh Water. Gallons per Minute.	Amount to Return System. Gallons per Minute.	Amount to Tailings Settling Box. Gallons per Minute.
7-millimeter trommels, 48 by 108 inches	4	42	168	.....	.....
4 " " 36 by 108 "	4	32	128	.....	.....
2 " " 36 by 108 "	4	31	124	.....	.....
4 " " re-grind, 48 by 108 inches	2	32	64	.....	.....
2 " " " 36 by 108 "	2	31	62	.....	.....
9-7 " jigs, 1 compartment, sieves 17.5 by 32.5 inches	8	31	248	.....	.....
7-4 " " 3 " " 17.5 by 32.5 "	8	48	384	.....	176
4-2 " " 3 " " 17.5 by 32.5 "	8	37	296	.....	160
0-2 " " 2 " " 17.5 by 32.5 "	8	16	128	.....	120
Richards' 3-spigot vortex classifiers — direct	4	66	264	.....	.....
Number 5 Wilfley tables — direct	12	6	72	.....	222
6-foot C. and W. vanners	4	2	8	.....	73
Oversize jigs, re-grind, 3 compartments	8	52	416	.....	176
4-2-millimeter jigs, re-grind, 3 compartments	4	37	148	.....	80
0-2 " " " 2 "	4	16	64	.....	60
Richards' 3-spigot vortex classifiers, re-grind	4	50	200	.....	.....
Number 5 Wilfley tables, re-grind	12	6	72	.....	194
" " " " middlings	3	6	18	.....	64
4-spigot Spitzkasten, direct	2	.....	.....	.....	184
4 " " re-grind	1	.....	.....	198	.....
Slimes-concentrates settling tanks and concentrates bins	.....	.....	.....	.....	20
Dewatering box and shovel wheel	.....	.....	.....	562	.....
Cone classifier	.....	.....	.....	150	.....
Slimes-concentrates settling tanks	.....	.....	.....	425	.....
Miscellaneous wash water	.....	.....	50	.....	50
Totals	.....	.....	2,914	1,335	1,579

Total fresh water available from mines	1,300 gallons per minute.
" water required from settling tanks	3,437 " " "
" " available from return-water system	4,005 " " "
Total water required for three double sections	8,742 " " "

§ 1457. MILL NO. 125. THE SMUGGLER LEAD CONCENTRATOR, SMUGGLER MINING COMPANY, ASPEN, COLORADO. — This mill has a capacity of 400 tons per 24 hours.[187] The ore consists of the economic minerals, native silver, argentiferous galena, pyrite, argentiferous barite, sphalerite, and smithsonite in a gangue of dolomite and quartz. The zinc minerals are amorphous and the remainder are in fine crystallization. The country rock is shale in the hanging wall and brown dolomite in the foot wall. The problem is to save the silver and lead values without the zinc and barite. The concentration of the zinc minerals has often been attempted but without success, due to the inability to separate the zinc from the barite.

Ore from the mine is delivered, via overlapping pan conveyor, to (1).

1. One breaker ore-feeder, 24 × 28 inches, with a grizzly bottom having bars 1.25 inches apart and making 30 6-inch strokes per minute. From the mine; delivers oversize to (3) and undersize to (2).

2. Bin, 8 × 12 × 12 feet, having a capacity of 75 tons. From (1) and (3); delivers to (4) or (26).

3. One Dodge breaker, 9 × 15 inches, making 250 revolutions per minute, using manganese-steel plates, and breaking to 1.25 inches. From (1); delivers crushed ore to (2).

4. Disc ore-feeder, 3 feet in diameter and making 15 revolutions per minute. From (2); delivers to (5).

5. Trommel conveyor, 2.5 × 8.25 feet, making 16 revolutions per minute and having a slope of 12 degrees. The trommel is divided into 3 sections; the first 40 inches is of 0.25-inch steel plate with no holes, then comes 30 inches of plate having 20-millimeter round holes, and finally 29 inches of 0.25-inch plate with no holes. From (4); delivers oversize to (7) and undersize to (6).

6. Fourteen-inch vertical elevator with an 8-ply Sawyer canvas belt having

a speed of 300 feet per minute and No. 8 gauge Salem buckets, 6 × 12 inches, set 16 inches apart, elevating the ore 70 feet. From (5), (7), (62), and (63); delivers to (8).

7. Roughing rolls, 14 × 24 inches, making 60 revolutions per minute, and crushing to 0.75 inch. From (5); deliver crushed ore to (6).

8. Vezin automatic sampler making one cut per minute and cutting out from 18 to 20 tons of ore per 24 hours. From (6); delivers sample to (62) and residual ore to (9).

9. Two trommels, 3 × 5.25 feet, having 13-millimeter round holes, slopes of 12°, and making 16 revolutions per minute. From (8); deliver oversize to (10) and undersize to (14).

10. Trommel, 3 × 5.83 feet, with two sections, the first 40 inches having 16-millimeter and the remainder 20-millimeter round holes. Makes 16 revolutions per minute and has a slope of 12°. From (9); delivers 6 to 0-millimeter stuff to (12), 20 to 16-millimeter stuff to (11), and material larger than 20 millimeters to (13).

11. One double 1-compartment crank-arm, quick-return, Harz jig with sieves of 0.25-inch-mesh iron-wire cloth. The plungers make 85 2-inch strokes per minute. From (10), fed with 20 to 16-millimeter stuff; deliver concentrates, via Heberli gate, to a concentrates box, from which they go to (67), the hutch product, via spiral pumps "A" (making 18 revolutions per minute and having a 14-inch throw), to (65), and tailings, from both ends, to (13).

12. One double 1-compartment crank-arm, quick-return, Harz jig, with sieves of 7-mesh, 18 brass-wire cloth. The plungers make 90 1.5-inch strokes per minute. From (10), fed with 16 to 0-millimeter stuff; deliver concentrates, via pipe discharge, to a concentrates box and thence to (67); the hutch product, via spiral pump "A," to (65); and tailings, from both ends, to (13).

13. Belted rolls, 15 × 30 inches, making 20 revolutions per minute, and having Midvale steel shells. From (10), (11), (12), and (26); deliver crushed ore to (25).

14. Trommel, 3 × 5 feet, having 10-millimeter round holes, a slope of 12°, and making 16 revolutions per minute. From (9); delivers oversize to (15) and undersize to (17).

15. One 4-compartment crank-arm, quick-return, Harz jig with sieves of 7-mesh, 18 brass-wire cloth. The plungers make 95 1.25-inch strokes per minute. From (14), (27), and wash water from (64), fed with 13 to 10-millimeter stuff; delivers discharge of the first 2 compartments, as concentrates, via pipe discharge, to a concentrates box and thence to (67); discharge of the last 2 compartments, as middlings, via conveyor and bin, to (16); the first hutch product, via spiral pump "B" (making 18 revolutions per minute and having a 14-inch throw), to (64); the last 3 hutch products, via spiral pump "A," to (65); and tailings, via tailings launder, to waste.

16. Three 5-foot Huntington mills making 90 revolutions per minute and having a combined capacity of from 60 to 100 tons per 24 hours when crushing through a diagonal-slot, punched-steel plate having 30 meshes to the inch. From (15), (18), (20), (22), (24), (30), (35), (36), (37), (39), (65), and feed water from (43); deliver pulp to (51).

17. Trommel, 3 × 5 feet, having 8-millimeter round holes, a slope of 12°, and making 16 revolutions per minute. From (14); delivers oversize to (18) and undersize to (19).

18. One 4-compartment crank-arm, quick-return, Harz jig with sieves of 14-mesh, 22 brass-wire cloth. The plungers make 100 1-inch strokes per minute. From (17), (28), and wash water from (65), fed with 10 to 8-millimeter stuff; delivers discharge of the first 3 compartments, via pipe discharge, to a con-

centrates box and thence to (67); discharge of the fourth compartment, as middlings, via conveyor and bin, to (16); the first hutch product, via spiral pump "B," to (64); the last 3 hutch products, via spiral pump "A," to (65); and tailings, via tailings launder, to waste.

19. Trommel, 2.5 × 5 feet, having 6-millimeter round holes, a slope of 10°, and making 20 revolutions per minute. From (17); delivers oversize to (20) and undersize to (21).

20. One 4-compartment crank-arm, quick-return, Harz jig with sieves of 14-mesh, 22 brass-wire cloth. The plungers make 110 0.875-inch strokes per minute. From (19), fed with 8 to 6-millimeter stuff; delivers discharge of the first 3 compartments, as concentrates, via pipe discharge, to a concentrates box and thence to (67); discharge of the fourth compartment, as middlings, via conveyor and bin, to (16); the first hutch product, via spiral pump "B," to (64); the last 3 hutch products, via spiral pump "A," to (65); and tailings, via tailings launder, to waste.

21. Trommel, 2.5 × 5 feet, having 4-millimeter round holes, a slope of 10°, and making 20 revolutions per minute. From (19); delivers oversize to (22) and undersize to (23).

22. One 4-compartment crank-arm, quick-return, Harz jig with sieves of 16-mesh, 23 brass-wire cloth. The plungers make 125 ¾-inch strokes per minute. From (21) and (31), fed with 6 to 4-millimeter stuff; delivers discharge of the first 3 compartments, as concentrates, via pipe discharge, to a concentrates box and thence to (67); discharge of the fourth compartment, as middlings, via conveyor and bin, to (16); the first 2 hutch products, via spiral pump "B," to (64); the last 2 hutch products, via spiral pump "A," to (65); and tailings, via tailings launder, to waste.

23. Trommel, 2.5 × 5 feet, having 2.5-millimeter round holes, a slope of 10°, and making 20 revolutions per minute. From (21); delivers oversize to (24) and undersize to (33).

24. One 4-compartment crank-arm, quick-return, Harz jig with sieves of 16-mesh, 23 brass-wire cloth. The plungers make 135 0.625-inch strokes per minute. From (23) and (32), fed with 4 to 2.5-millimeter stuff; delivers discharge of the first 3 compartments, as concentrates, via pipe discharge, to a concentrates box and thence to (67); discharge of the fourth compartment, as middlings, via conveyor and bin, to (16); the first 2 hutch products, via spiral pump "B," to (64); the last 2 hutch products, via spiral pump "A," to (65); and tailings, via tailings launder, to waste.

25. Twelve-inch elevator, style "B" as made by the Link Belt Company, with an 8-ply rubber belt having a speed of 380 feet per minute, a slope of 0.5 inch to the foot and malleable cast-iron buckets, 3 × 4 × 10 inches, set 16 inches apart. From (13); delivers to (26).

26. Trommel, 3 × 5.25 feet, having 13-millimeter round holes, a slope of 12°, and making 16 revolutions per minute. From (25) or (2); delivers oversize to (13) and undersize to (27).

27. Trommel, 3 × 4 feet, having 10-millimeter round holes, a slope of 8°, and making 16 revolutions per minute. From (26); delivers oversize to (15) and undersize to (28).

28. Trommel, 3 × 4 feet, having 8-millimeter round holes, a slope of 8°, and making 16 revolutions per minute. From (27); delivers oversize to (18) and undersize to (29).

29. Trommel, 2.5 by 4 feet, having 5.5-millimeter round holes, a slope of 8 degrees, and making 16 revolutions per minute. From (28); delivers oversize to (30) and undersize to (31).

30. One 4-compartment crank-arm, quick-return, Harz jig, with sieves of

14-mesh, 22 brass-wire cloth. The plungers make 130 ¾-inch strokes per minute. From (29), fed with 8 to 5.5-millimeter stuff; delivers discharge of the first 3 compartments, as concentrates, via pipe discharge, to a concentrates box and thence to (67); discharge from the fourth compartment, as middlings, via conveyor and bin, to (16); the first hutch product, via spiral pump "B," to (64); the last 3 hutch products, via spiral pump "A," to (65); and tailings, via tailings launder, to waste.

31. Trommel, 2.5 × 4 feet, having 4-millimeter round holes, a slope of 5°, and making 20 revolutions per minute. From (29); delivers oversize to (22) and undersize to (32).

32. Trommel, 2.5 × 4 feet, having 2.5-millimeter round holes, a slope of 5°, and making 20 revolutions per minute. From (31); delivers oversize to (24) and undersize to (33).

33. One partially submerged trommel, 1.5 × 3.33 feet, having a 10-mesh, 19 brass-wire cloth screen and making 8 revolutions per minute. From (23) and (32); delivers oversize to (35), (36), and (42) and undersize to (34).

34. One partially submerged trommel, 1.5 × 3.33 feet, having a 16-mesh, 23 brass-wire cloth screen and making 8 revolutions per minute. From (33); delivers oversize to (37) and (38) and undersize to (42).

35. One 5-compartment Harz-eccentric bedded sand-jig with sieves of 7-mesh, 18 brass-wire cloth. The plungers make 160 0.625-inch strokes per minute. From (33); delivers the first 3 hutch products, as concentrates, via pipe discharge, to a concentrates box and thence, via car elevator, to (66); the hutch products of the last 2 compartments, via bin, to (16); and tailings, via tailings launder, to waste.

36. One 5-compartment Harz jig with details as in (35). From (33); delivers the first 3 hutch products, as concentrates, via pipe discharge, to a concentrates box and thence, via car elevator, to (66); the hutch products of the last 2 compartments, via bin, to (16); and tailings, via tailings launder, to waste.

37. One double 4-compartment Harz jig with sieves of 7-mesh, 18 brass-wire cloth. The plungers make 200 0.5-inch strokes per minute. From (34); delivers the first 3 hutch products, as concentrates, via pipe discharge, to a concentrates box and thence, via car elevator, to (66); the hutch product of the last compartment, via bin, to (16); and tailings, via tailings launder, to waste.

38. Table pocket-classifier with 3 spigots. From (34); delivers the first spigot to (39), second spigot to (40), third spigot to (41), and overflow to (42).

39. Wilfley table making 150 strokes per minute. From (38); delivers concentrates, via concentrates box, to (66); (on some ores) middlings, via bin, to (16); and tailings, via tailings launder, to waste.

40. Wilfley table making 155 strokes per minute. From (38); delivers concentrates, via concentrates box, to (66) and tailings, via tailings launder, to waste.

41. Wilfley table making 160 strokes per minute. From (38); delivers concentrates, via concentrates box, to (66) and tailings, via tailings launder, to waste.

42. One 4-inch centrifugal sand-pump making 500 revolutions per minute. From (33), (34), and (38); delivers to (43).

43. Settling tank 12 feet in diameter. From (42); delivers spigot, via siphon discharge, to (44) and overflow to (16).

44. Twenty-four inch double-cone classifier. From (43); delivers spigot to (45) and overflow to (46).

45. Two 6-foot Frue vanners with corrugated belts. From (44); deliver concentrates, via concentrates boxes, to (66) and tailings, via tailings launder, to waste.

46. V-shaped settling tank with 3 spigots, From (44); delivers the first spigot to (47), second spigot to (48), third spigot to (49), and overflow to (50).

47. One 6-foot Frue vanner with a smooth belt and making 190 throws per minute. From (46); delivers concentrates, via concentrates box, to (66) and tailings, via tailings launder, to waste.

48. One 6-foot Frue vanner with a smooth belt and making 185 throws per minute. From (46); delivers concentrates, via a concentrates box, to (66) and tailings, via tailings launder, to waste.

49. One 6-foot Frue vanner with a smooth belt and making 180 throws per minute. From (46); delivers concentrates, via a concentrates box, to (66) and tailings, via tailings launder, to waste.

50. One 6-foot Frue vanner with a smooth belt and making 180 throws per minute. From (46); delivers concentrates, via a concentrates box, to (66) and tailings, via tailings launder, to waste.

51. Twelve-inch elevator with an 8-ply rubber belt having a speed of 400 feet per minute, a slope of 2 inches to the foot, and No. 10 gauge Salem buckets, 5.5 × 10 inches, set 14 inches apart. From (16); delivers to (52).

52. Pocket classifier with 3 spigots. From (51); delivers the first spigot to (53), second spigot to (54), third spigot to (55), and overflow to (56).

53. Wilfley table making 150 strokes per minute. From (52); delivers concentrates, via a concentrates box, to (66) and tailings, via tailings launder, to waste.

54. Wilfley table making 155 strokes per minute. From (52); delivers concentrates, via a concentrates box, to (66) and tailings, via tailings launder, to waste.

55. Wilfley table making 160 strokes per minute. From (52); delivers concentrates, via a concentrates box, to (66) and tailings, via tailings launder, to waste.

56. Twenty-four inch double-cone classifier. From (52); delivers spigot to (57) and overflow to (58).

57. Wilfley table making 160 strokes per minute. From (56); delivers concentrates, via a concentrates box, to (66) and tailings, via tailings launder, to waste.

58. V-shaped settling tank with 2 spigots. From (56); delivers the first spigot to (59), second spigot to (60), and overflow to (61).

59. One 6-foot Frue vanner with a smooth belt and making 185 throws per minute. From (58); delivers concentrates, via a concentrates box, to (66) and tailings, via tailings launder, to waste.

60. One 6-foot Frue vanner with details as in (59). From (58); delivers concentrates, via a concentrates box, to (66) and tailings, via tailings launder, to waste.

61. One 6-foot Frue vanner with details as in (59). From (58); delivers concentrates, via a concentrates box, to (66) and tailings, via tailings launder, to waste.

62. Sample rolls, 10 × 20 inches. From (8); deliver, via pipe splitters, sample, weighing from 2.25 to 2.50 tons, via sample bin, to (63) and reject, weighing from 15.75 to 17.50 tons, to (6).

63. Sample grinder. From (62); delivers, via pipe splitters, sample, weighing 50 pounds, to sample box and assayer and reject, weighing from 4,450 to 4,950 pounds, to (6).

64. Settling tank for hutch concentrates. From (15), (18), (20), (22), (24), and (30); delivers concentrates to (66) and wash water to (15).

65. Settling tank for hutch middlings. From (11), (12), (15), (18), (20), (22), (24), and (30); delivers middlings, via bin, to (16) and wash water to (18).

66. Drier made up of 4-inch steam pipes, 7 feet long, put together with return ells. The drier is 2 pipes high. The return ells are all in a vertical plane at one end so that there is a clear opening to facilitate the removal of dried concentrates. Steam is kept at 20 pounds pressure and the concentrates are dried for 24 hours. From (35), (36), (37), (39), (40), (41), (45), (47), (48), (49), (50), (53), (54), (55), (57), (59), (60), (61), and (64); delivers to (67).

67. Railroad cars. From (11), (12), (15), (18), (20), (22), (24), (30), and (66); deliver to smelter.

All the trommel screens are in two pieces, each piece being 0.5 the circumference of the trommel plus 1.5 inches which provides a 1.5-inch lap on each joint. The screens are held to the trommel by a 3-inch iron band at the head and foot and a 2-inch iron band in the middle. Each strap or hoop is made 4 inches short with a lug on each end and is fastened together by a draw bolt.

The spacing between the holes on the different trommels is as follows:

Size of Holes.	Distance, Center to Center.	Thickness of Plate, B. G.
20 millimeter	1.1563 inches	Number 6
16 "	.8750 inch	" 7
13 "	.8125 "	" 7
10 "	.5625 "	" 8
8 "	.5000 "	" 8
6 "	.4063 "	" 10
5.5 "	.3750 "	" 10
4 "	.2817 "	" 12
2.5 "	.1875 "	" 16

The crude ore, from March to November inclusive, 1907, averaged as follows: Moisture, 2.7%; lead, 4.3%; silica, 11.9%; iron, 1.7%; lime, 17.0%; sulphur, 4.7%; zinc, 8.5%; barite, 10.3%; and silver, 6.5 ounces per ton.

The concentration ratio averages 6.5 to 1. For commercial reasons this mill tries to obtain a concentrate on the jigs which runs between 20 and 25% in lead, and on the tables and vanners from 15 to 20% in lead, allowing the silver, to run whatever it happens to in each case.

The average middlings, re-ground in the Huntington mills for the year 1907, ran 3.6% in lead and 6.7 ounces in silver per ton. The average tailings, during the same period of time, ran as follows:

Coarse jig-tailings.....	0.47%	in lead,	1.77	ounces	silver	per	ton
Sand " "	0.58 "	"	1.30	"	"	"	
Tables (main run)	0.62 "	"	1.90	"	"	"	
Middlings tables	0.61 "	"	2.34	"	"	"	

The average saving for the year ending July 31, 1907 was 81.91% of the lead and 55.58% of the silver in the crude ore.

Labor and Wages.

The mill operates two 12-hour shifts per 24 hours and 7 days a week. There is employed on each shift:

1 boss at $5.25	$5.25
4 mill men on trommels, elevators, rolls, Huntingtons, jigs, tables, and vanners, at $4.50	18.00
2 millmen on conveyors (11 hours) at $3.78	7.56
2 roustabouts (11 hours) at $3.78	7.56
9 men	$38.37

On the day shift there is in addition 1 foreman at $225 per month, 1 sampler (11 hours) at $3.78, one carpenter (9 hours) at $4, 1 blacksmith (9 hours) at $3.75, and 1 machinist (9 hours) at $3.50.

Power and Water.

Power is generated by Pelton wheels which are located about one mile from the mill. They drive 3 motors of 110, 60, and 20 horse-power respectively.

The 110 horse-power motor runs the breakers, rolls, elevators, trommels, jigs, samplers, and conveyors, and 52 horse-power is consumed in this work. The 60 horse-power motor runs the Huntington mills and 1 elevator, and 30 horse-power is consumed in this work. The 20 horse-power motor runs all vanners, tables, and the slimes pump, and 20 horse-power is consumed in this work.

A steam boiler furnishes heat for the drier, and the cost of fuel coal is $3 per ton.

The water for the mill comes from the Roaring Fork River and the mine pumps, via flume, 20 × 28 inches × 450 feet, and enters the mill under a head of 2 feet. Fifteen hundred gallons of water per minute are used. The wash water used on the jigs is supplied through a 1.5-inch pipe, under a 5-foot head, and the valve is usually wide open. Each Huntington mill requires 25 gallons of water per minute.

The wash water used on the Wilfley tables varies between 3 and 8 gallons per minute and on the Frue vanners between 1 and 2.125 gallons per minute.

G. - MILLS SAVING ONLY LEAD VALUES.

Mills 126 and 127 exemplify this class in Missouri practice.

§ 1458. MILL NO. 126. HOFFMANN MILL OF THE ST. JOSEPH LEAD COMPANY, LEADWOOD, MISSOURI.[20] — This mill has a capacity of 1,200 tons per 24 hours and is divided into 4 sections of 300 tons each.[21] The economic minerals are galena and small quantities of pyrite in a limestone gangue. The problem is to save the galena. The ore comes from the various shafts and is delivered to (1) by means of the following conveyors: One 30-inch steel double-beaded-flight conveyor, built by the Jeffrey Manufacturing Company, having a speed of 48 feet per minute, and requiring 12 horse-power. One 30-inch conveyor of same design having a speed of 52 feet per minute and requiring 11 horse-power. One 36-inch conveyor of same design, having a speed of 23 feet per minute and requiring 1 horse-power. The plates last 6 years.

1. One style "D" No. 6 Gates breaker having a pulley speed of 375 revolutions per minute. One style "K" No. 6 Gates breaker having a pulley speed of 410 revolutions per minute. The former has a capacity of 1,000 tons per 24 hours and requires 30 horse-power. The life of the various wearing parts in the former is as follows: Eccentric, 3 months; main shaft, 16 months; manganese-steel head, 5 years; concaves, 5 years; wearing plates, 1 year; spider, 2.5 years; hopper, 4 years; and band-wheel, 18 months. From the conveyors; deliver crushed ore to (2).

2. Two trommels, 3.5 × 12 feet, having 1.5-inch round holes punched in manganese sheet steel, a speed of 18 revolutions per minute, and requiring 2.1 horse-power. From (1); deliver oversize to (3) and undersize to (4).

3. Two style "D" No. 4 and one style "K" No. 4 Gates breakers having pulley speeds of 425 and 382 revolutions per minute, a combined capacity of 700 tons per 24 hours, and requiring 18 horse-power. The life of the various wearing parts of the former is as follows: Eccentrics, 3 years; top shells, 3 years; wearing plates, 1 year; chilled-iron solid heads, 2 years; and manganese-steel mantles for heads, 3 years. In the style "K" No. 4 crusher the top shells last 19 months. From (2); deliver crushed ore to (4).

4. Twenty-inch troughed-belt conveyor with a 5-ply rubber belt having a rubber covering 0.094 inch thick. Made by the Revere Rubber Company.

It has a conveying length of 90 feet, a speed of 260 feet per minute, a slope of 22.5°, a life of 14 months, a capacity of 2,100 tons per 24 hours, and requires 2.4 horse-power. From (2) and (3); delivers to (5).

5. Twenty-inch flat belt conveyor with same details as to material, make, capacity, and life as in (4). It has a conveying length of 188 feet, a speed of 200 feet per minute, and requires 1.5 horse-power. From (4); delivers to (6).

6. Wooden mill bin, 18 × 20 × 181 feet with a capacity of 3,400 tons. From (5) by means of an automatic tripper. It delivers, via 8 Gates automatic feeders making 75 revolutions per minute, to (7).

The mill is here divided into 4 sections, only one of which will be described.

7. Fifteen-inch elevator with an 8-ply rubber belt having a rubber covering 0.094 inch thick. Made by the Revere Rubber Company, "Silverton Brand." It has a speed of 350 feet per minute, a life of 3 years, and malleable-iron buckets, 5 × 6 × 14 inches, made by the Stephens-Adamson Company, set 20 inches apart, and having a life of 9 months. The elevator has a capacity of 500 tons per 24 hours, elevates the ore 54 feet, and requires 1.7 horse-power. Run dry. From (6) and (9); delivers to (8).

8. Two trommels, 3.5 × 9 feet, having 9-millimeter round holes punched in No. 8 steel plate which has a life of 6 months. Have speeds of 18 revolutions per minute, slopes of 5 degrees, and require 1.3 horse-power. From (7); deliver oversize to (9) and undersize to (10).

9. Gates high-grade rolls, 15 × 36 inches, run dry at 56 revolutions per minute and requiring 16 horse-power. The life of the babbitt is about 4 years and of the shells about 2.5 years, or they handle 210,800 tons of crushed ore. From (8); deliver crushed ore to (7).

10. Two trommels, 3 × 9 feet, having 5-millimeter round holes punched in No. 10 steel plate which has a life of 3 months. Have speeds of 24 revolutions per minute, slopes of 3°, and require 1.3 horse-power. From (8) and (15); deliver oversize to (11) and undersize to (16).

11. Round cast-iron distributor with six 2-inch discharges, no overflow, a capacity of 150 tons per 24 hours, and a life of 2 years. From (10); delivers to (12).

12. Six 2-compartment jigs with sieves, 24 × 36 inches, of 5-mesh, 5 copper-wire cloth having a life of 1 year. The plungers make 174 1.25-inch strokes per minute. Each handles 28 tons per 24 hours and requires 1.6 horse-power and 25 gallons of water per minute. From (11), fed with 9 to 5-millimeter stuff; deliver discharges and hutches of first compartments to (36), discharges of second compartments to (14), hutches of second compartments to (13), and tailings to (19).

13. One 5-foot Huntington mill. From (12), (18), and (24); delivers pulp to (27).

14. Allis-Chalmers, style "B," rolls, 14 × 30 inches, run wet at 115 revolutions per minute, and requiring 5.5 horse-power. Shells last 5 years. From (12); deliver crushed ore to (15).

15. Fourteen-inch elevator with a 6-ply rubber belt, made by the Revere Rubber Company, "Silverton Brand." It has a speed of 375 feet per minute, a life of 14 months, and malleable-iron buckets, 5 × 5 × 10 inches, set 18 inches apart. The elevator has a capacity of 200 tons per 24 hours, elevates the ore 50 feet, and requires 1.7 horse-power. From (14); delivers to (10).

16. Two trommels, 3 × 6 feet, having 2.5-millimeter round holes punched in No. 16 steel plate which has a life of 6 weeks. Have speeds of 21 revolutions per minute, slopes of 3°, and require 1 horse-power. From (10); deliver oversize to (17) and undersize to (22).

17. Round cast-iron distributor with details as in (11). Made by the Fulton Iron Works, St. Louis, Missouri. From (16); delivers to (18).

18. Six 2-compartment jigs with sieves, 24 × 36 inches, of 4-mesh, 15 copper-wire cloth having a life of 1 year. The plungers make 180 0.75-inch strokes per minute. Each handles 25 tons per 24 hours and requires 1.5 horse-power and 27 gallons of water per minute. From (17), fed with 5 to 2.5-millimeter stuff; deliver hutches of first compartments to (36), discharges and hutches of second compartments to (13), and tailings to (19).

19. Twelve dewatering screens with 3-millimeter round holes punched in No. 12 steel plate having a life of 4 months. From (12) and (18); deliver to (20) and water to settling pond.

20. Twenty-four inch troughed-belt conveyor with a 5-ply rubber belt having a conveying length of 262 feet, a speed of 300 feet per minute, a slope of 26°, a capacity of 800 tons per 24 hours, and a life of 1 year. From (19); delivers to (21).

21. Wooden bin for tailings, 14 × 16 × 40.8 feet, having a capacity of 385 tons. From (20); delivers to cars.

22. Two classifiers, 8 × 16 × 18 inches, with 2-inch tees for clear water having 10 pounds pressure per square inch, and 1-inch discharge spigots. From (16); deliver spigots to (23) and overflows to (25).

23. Two cast-iron distributors, each with six 2-inch discharges. From (22) and (28); deliver spigots to (24) and no overflows.

24. Six 2-compartment jigs with sieves, 17 × 24 inches, of 7-mesh, 18 copper-wire cloth having a life of 9 months. The plungers make 220 0.375-inch strokes per minute. Each handles 13 tons per 24 hours and requires 0.6 horse-power and 30 gallons of water per minute. From (23), fed with 2.5 to 0-millimeter stuff; deliver hutches to (36), discharges to (13), and tailings to (42).

25. Four "Bilharz" Spitzlutten with 2 spigots each. From (22); deliver spigots to (26) and overflows to (32).

26. Four No. 5 Wilfley tables making 243 throws per minute. Three tables on first spigots and one table on second spigots from (25). The top of the tables and the motions have been in use about 4 years and are still in fairly good condition. Linoleum lasts about 4 years. Each table requires 0.25 horse-power and, with coarse feed, 7 gallons of wash water and 15 gallons of feed water per minute; while, with fine feed, 2.5 gallons of wash water and 11 gallons of feed water per minute are sufficient. The feed water used on these tables is first used on the trommels as a spray, a part of which is taken away in spitzlutten and spitzkasten. From (25); deliver concentrates to (35), middlings to (34), and tailings to (42).

27. Centrifugal pump. From (13); delivers pulp to (28).

28. One 3-compartment Spitzkasten. From (27); delivers the first spigot to (23), the last 2 spigots to (29), and the overflow to (30).

29. Wilfley tables. From (28); deliver concentrates to (35), middlings to (34), and tailings to (42).

30. Settling tank. From (28); delivers spigot to (31) and overflow to (42).

31. Wilfley table. From (30); delivers concentrates to (35) and tailings to waste.

32. Two 3-compartment Spitzkasten. From (25); deliver spigots, via distributor, to (33) and overflows to (42).

33. Five Wilfley tables making 243 throws per minute and requiring 0.25 horse-power each. From (32); deliver concentrates to (35), middlings to (34), and tailings to (42).

34. Two Wilfley tables making 243 throws per minute. From (26), (29), and (33); deliver concentrates to (35) and tailings to waste.

35. Frenier spiral sand-pump, 10 × 54 inches, making 18 revolutions per minute, and having a life of 10 years. Requires 1 horse-power to lift 100 gal-

lons of water and 30 pounds of concentrates per minute, 10 feet. From (26), (29), (31), (33), (34), and (38); delivers to (36).

36. Jeffrey steel link-chain scraper-conveyor, having a conveying length of 49 feet, a speed of 17 feet per minute, a slope of 19°, and requiring 0.8 horse-power. Conveyor parts last about 1 year and the iron trough about 3 years. From (12), (18), (24), and (35); delivers concentrates to (39) and surplus water to (37).

37. Settling tank. From (36); delivers spigot to (38) and overflow to the settling pond.

38. Wilfley table. From (37); delivers concentrates to (35) and tailings to waste.

39. Jeffrey steel link-chain conveyor having a conveying length of 35.5 feet, a speed of 25 feet per minute, and requiring 0.6 horse-power. From (36); delivers to (40).

40. Fourteen-inch flat belt conveyor with a 5-ply "Giant Belt," made by the Revere Rubber Company. It has a conveying length of 65 feet, a speed of 190 feet per minute, a slope of 20.5°, a capacity of 200 tons of concentrates per 24 hours, and requires 0.4 horse-power. From (39); delivers to (41).

41. Wooden concentrates-hopper having a capacity of 5 tons and located above the track for loading concentrates into the cars. From (40); delivers to cars.

42. Sump or series of concrete tanks. From (24), (26), (29), (30), (32), and (33); deliver overflows to settling pond and residue, periodically, to mill again.

The mill operates three 8-hour shifts per 24 hours and 6 days per week. Twenty-five men are employed per shift.

Power and Water.

Steam is supplied by six 250 horse-power Heine safety boilers to two cross-compound condensing engines manufactured by the Fulton Iron Works, St. Louis, Missouri. The cylinders are 16 and 32 inches in diameter and the stroke is 42 inches long. They make 100 revolutions per minute and drive two 300-kilowatt generators made by the National Electric Company, Milwaukee, Wisconsin. These generators deliver electricity at 250 volts. The total mill requires 58 horse-power.

Water is supplied to the mill from a steel water-tank of a capacity of 27,000 gallons which, in turn, is fed by a 12-inch Worthington centrifugal pump, lifting water from the settling pond. The tank is also fed from a reservoir which, in turn, is fed by a Laidlow, Dunn, Gordon fly-wheel pumping engine having a capacity of 1,800 gallons per minute. This pump is situated on Big River about 1.25 miles from the mill. Four million gallons of water are required per 24 hours.

§ 1459. MILL NO. 127. NEW CONCENTRATING MILL OF THE ST. LOUIS SMELTING AND REFINING COMPANY, DESLOGE, MISSOURI. — This mill has a capacity of 1,800 tons per 24 hours.[157] The ore is composed of the economic mineral galena, which is disseminated through a dark magnesian limestone and assays from 5.0 to 6.0% in lead. The problem is to save the lead. Ore from the mine is delivered to (1).

Crushing Department.

1. Breaker bin, 28 feet long by 18 feet wide by 13 feet deep, V-shaped with the bottoms sloping at about 45° and having a capacity of 100 tons. From the mine; delivers, via steel hopper and worm-and-gear operated quadrant-gate, to (2).

2. Two style "D," No. 6, Gates breakers making 165 revolutions per minute. Capacity 40 tons per hour to 2.5 inches. From (1); deliver crushed ore to (3).

3. Two trommels, 8 feet long by 38 inches in diameter, with 1.75-inch round holes punched in 0.375-inch carbon steel. They have slopes of 2 inches to the foot, make 16 revolutions per minute, and the screens last 6 months. From (2); deliver oversize to (4) and undersize to (5).

4. Four style "D," No. 3, Gates breakers making 212 revolutions per minute. Capacity 40 tons per hour to 1.25 inches. From (3); deliver crushed ore to (5).

5. Twenty-inch belt conveyor with a 4-ply rubber belt made of 32-ounce duck with a 0.094-inch rubber cover on one side which lasts from 12 to 18 months. Has a conveying length of 225 feet, an inclination of 21°, and a speed of 300 feet per minute. From (3) and (4); delivers to (6).

6. Twenty-inch belt conveyor having a conveying length of 100 feet, a speed of 300 feet per minute, and other details as in (5), except that it runs level. From (5); delivers to (7).

7. Crushed ore storage-bin, 41.5 feet long by 9 feet wide by 18.5 feet deep, with a flat bottom and a capacity of 600 tons. From (6); delivers to (8).

8. Sixteen-inch belt conveyor having a conveying length of 425 feet, an inclination of 17°, a speed of 400 feet per minute, and other details as in (5). From (7); delivers to (9).

Concentrating Department in Four Sections.

(Only One Section Described.)

9. Mill storage-bin, 24 feet long by 10 feet wide by 14 feet deep at the front and 7.5 feet deep at the back, with a capacity of 100 tons. From (8); delivers to (10).

10. Two 16-inch wall-type feeders making 75 revolutions per minute. Satisfactory. From (9); deliver to (11).

11. Two style "A" Gates crushing rolls, 15 × 36 inches, making 50 revolutions per minute. The locomotive-steel shells can handle 300 tons per 24 hours and have a life of 2 years. From (10) and (13); deliver crushed ore to (12).

12. Thirteen-inch elevator with an 8-ply belt having a speed of 300 feet per minute, a life of 15 months, and malleable-iron buckets, 7 × 8 × 12 inches, spaced 18 inches apart, which elevate the ore 48 feet and have a life of 1 year. From (11); delivers to (13).

13. Two trommels, 3 × 6.67 feet, with round holes punched in No. 8 carbon steel which has a life of 6 months. The holes in the first half are 8 and in the second half 6 millimeters in diameter. The trommels have slopes of 2 inches to the foot and make 18 revolutions per minute. From (12); deliver oversize to (11) and the undersize to (14).

14. Two 20-inch Richards' annular classifiers, each having a capacity of 250 tons per 24 hours. From (13) and (17); deliver spigots to (15) and overflows to (22).

15. One 25-foot 5-compartment Hancock jig with sieves 32.5 inches wide. The sieves are made up as follows: 3 feet of 8-mesh, No. 9 copper-wire cloth; 8 feet of 5-mesh, No. 11 copper-wire cloth; 4 feet of 6-millimeter round-punched metal; and 8 feet of 8-millimeter round-punched metal. The sieve cloth lasts from 4 to 5 months. The plungers make 200 0.75-inch strokes per minute and the jig has a capacity of 600 tons per 24 hours. From (14); delivers the first three hutches to (44), the fourth hutch to (16), the fifth hutch to (20), and the tailings to (18).

16. One Gates style "A" crushing rolls, 15 × 26 inches, making 100 revolu-

tions per minute. From (15); deliver crushed ore to (17), via a 2.5-inch centrifugal pump driven by a 20 horse-power motor at 1,125 revolutions per minute, and having chilled cast-iron liners and runners which last 8 weeks.

17. Slimes-extracting tank, 2.5 × 2.5 × 6 feet. From (16); delivers spigots to (14) and overflow to (33) and (41).

18. One 25-foot 5-compartment Hancock jig with details as in (15). Serves two sections. From (15); delivers one-half of all the hutch products to (19) and one-half the tailings to (32).

19. One 6-foot Huntington mill making 65 revolutions per minute. Capacity 100 tons per 24 hours through a No. 10 diagonal-slotted screen which lasts 10 days. The roller tires and ring dies are of locomotive steel. Roller tires last 2 years and ring dies last 3 years. From (18) and (43); delivers pulp to (35).

20. One 6-foot Huntington mill with details as in (19). From (15) and (43); delivers pulp to (21).

21. Eleven-inch elevator with a 7-ply belt having a life of 15 months; a speed of 300 feet per minute; and malleable-iron buckets, 6 × 10 inches, spaced 16 inches apart, which elevate the ore 45.5 feet and have a life of 12 months. From (20) and (29); delivers to (22).

22. Slimes-extracting tank, 2.5 × 2.5 × 6 feet. From (14) and (21); delivers spigot to (24) and overflow to (23).

23. Two slimes-extracting tanks, 2.5 × 2.5 × 6 feet. From (22); deliver spigots to (24) and overflows to (33).

24. Richards' 3-spigot vortex classifier with a 30-foot head of water and the cocks one-half open. From (22) and (23); delivers the first spigot to (25), the second spigot to (26), the third spigot to (27), and the overflow to (33).

25. Four right-hand Overstrom tables, 5 × 11 feet, making 238 0.75-inch strokes per minute, each handling 15 tons per 24 hours, and the linoleum tops and riffles lasting from 2 to 4 years. From (24); deliver concentrates to (44), middlings to (31), and tailings to (28).

26. Three right-hand Overstrom tables, 6 × 14 feet, with other details as in (25). From (24); deliver concentrates to (44), middlings to (31), and tailings to (30).

27. Two right-hand Overstrom tables with details as in (26). From (24); deliver concentrates to (44), middlings to (31), and tailings to (31).

28. Two slimes-extracting tanks, 1.67 × 1.67 × 4 feet. From (25); deliver spigots to (29) and overflows to (32).

29. Four right-hand Overstrom tables, 5 × 11 feet, making 238 1-inch strokes per minute, each handling 25 tons per 24 hours, and the linoleum tops and riffles lasting from 2 to 4 years. From (28); deliver concentrates to (44), middlings to (21), and tailings to (32).

30. Slimes-extracting tank, 1.67 × 1.67 × 4 feet. From (26); delivers spigots to (31) and overflows to (32).

31. Five right-hand Overstrom tables with details as in (26), except that they make 246 strokes per minute. From (25), (26), (27), and (30); deliver concentrates to (44), middlings to (35), and tailings to (32).

32. Two wooden tailings-tanks with a capacity of 1,750 cubic feet each and flat bottoms. From (18), (28), (29), (30), and (31); deliver, via 5-inch iron stop cocks set 4 feet apart, to car and thence to tailings pile.

33. Three 8-foot Callow settling-tanks made of No. 8 tank steel. From (17), (23), and (24); deliver spigots to (34) and overflows to reservoir.

34. Five Allis-Chalmers 6-foot Frue vanners making 282 1.5-inch throws per minute and having a belt speed of 6 feet per minute with a capacity of 8 tons per 24 hours each. Belts last from 3 to 4 years. From (33); deliver concentrates to (45) and tailings to reservoir.

35. Eleven-inch elevator with details as in (21). From (19) and (31); delivers to (36).

36. Slimes-extracting tank, 2.5 × 2.5 × 6 feet. From (35); delivers spigots to (37) and overflow to (41).

37. Richards' 3-spigot vortex classifier with details as in (24). From (36); delivers the first spigot to (38), the second spigot to (39), the third spigot to (40), and the overflow to (41).

38. Three left-hand Overstrom tables with details as in (26), except that they make 240 strokes per minute. From (37); deliver concentrates to (45), middlings to (43), and tailings to reservoir.

39. One left-hand Overstrom table with details as in (38). From (37); delivers concentrates to (45), middlings to (43), and tailings to reservoir.

40. One left-hand Overstrom table with details as in (38). From (37); delivers concentrates to (45), middlings to (43), and tailings to reservoir.

41. Three 8-foot Callow settling-tanks with details as in (33). From (17), (36), and (37); deliver spigots to (42) and overflows to reservoir.

42. Five 6-foot vanners with details as in (34). From (41); deliver concentrates to (45) and tailings to reservoir.

43. Centrifugal pump made by the Kingsford Foundry and Machine Company. Common to all four sections. It makes 1,125 revolutions per minute and throws 125 gallons of water per minute against a head of 35 feet. Has chilled-iron runners and liners which last 8 weeks. From (38), (39), and (40); delivers to (19) and (20).

44. Concrete settling-tank, 2.5 × 6.25 × 150 feet, with a flat bottom, for coarse concentrates. From (15), (25), (26), (27), (29), and (31); delivers drainings to (46) and concentrates, via cars, to smelter.

45. Concrete settling-tank, 2 × 10 × 150 feet, with a flat bottom, for fine concentrates. From (34), (38), (39), (40), and (42); delivers drainings to (46) and concentrates, via cars, to smelter.

46. Centrifugal pump with chilled runners and liners which last 8 weeks. From (44) and (45); delivers to (47).

47. Mill supply-tank. From (46); delivers to mill system.

The combined concentrates run about 70.0% in lead. The tailings from the Hancock jigs run about 0.3%, from the Overstrom tables 0.05 to 0.2%, and from the vanners 1.5 to 2.5% in lead.

Labor and Wages.

The mill is run on three 8-hour shifts per day and 6 days a week. In the whole mill 20 men are employed per shift at an average wage per man of $1.62 per shift.

Power and Water.

The total power required to operate the mill is about 500 horse-power. The power plant is of the central-station type which furnishes power for both the mine and the mill. Everything in the mine is electrically driven and the mill is operated by being direct belted to the fly-wheel on the crank shaft of the engine. There are six Babcock and Wilcox 250 horse-power boilers, each equipped with Jones underfeed stokers which are supplied from bunkers above.

The mill engine is a 22 and 42 × 48-inch cross-compound making 90 revolutions per minute, generating 850 horse-power, and connected to a 250-kilowatt generator on the one side, and by a 50-inch × 18-foot fly-wheel to the mill on the other side. There are also two 16 and 30 × 42-inch cross-compound engines direct connected to two 250-kilowatt generators. Two 2-stage 2,000-cubic-foot air-compressors, with cylinders 20 and 34 × 48 inches on the steam end, 16.5 and 28 × 48 inches on the air end.

All the engines are of Filer and Stowell make and exhaust to a Worthington central condenser.

All the generators are of General Electric make and generate a 500-volt direct current.

Two Gould storage batteries, each of 250 cells having 17 10.5 × 10.5-inch plates to regulate the heavy fluctuating load, consisting of surface and underground locomotive and hoists.

The total water required is 4,000 gallons per minute. The water supply comes from shafts Nos. 1 and 2 at the mine and amounts to 800 gallons per minute. This amount more than supplies the losses in milling as all the water from the mill is settled through reservoirs and pumped to the mill supply-tank by two 15 × 20-inch single-acting triplex pumps making 42 revolutions per minute and driven by rope transmission from the main line shaft of the mill.

H. MILLS SAVING SILVER, LEAD, AND ZINC VALUES.

Mills 128, 129, 130, 131, 132, 133, 134, 135, 136, 137, and 138 belong in this group and show the methods of concentration in use in six districts.

§ 1460. MILL NO. 128. AUSTRALASIAN PRACTICE IN THE CONCENTRATION OF SILVER-LEAD ORES. — The following applies to the general concentration of ores at Broken Hill, New South Wales, and in particular to the Block 10 mine.[10]

A hillside is considered a favorable site for a mill as it allows a great deal of the work to be done by gravity. The mill should not, however, be placed over or too near the top of the lode as caving is very liable to occur.

The crude ore is generally broken underground to about 8 × 10 inches, suitable for feeding to a No. 5 Gates breaker. The breaker is sometimes placed in or near the head house and here the first reduction takes place. Often the breakers are contained in the mill building itself, but this is not advantageous if the mill is situated far from the shaft. In case the breaker is put in the mill building, it, and all other crushers, should have separate foundations from those supporting the remainder of the mill to avoid vibration.

The breaker should be placed below the first storage bin so that an interruption in the haulage system would not leave the breaker out of ore and an accident to the breaker would not necessarily stop haulage. This bin should hold at least 8 hours' supply of ore and at least one spare breaker should be provided to keep the mill running in case of accidents to the other breaker. Breakers for breaking rhodonite should have solid brass or white-metal eccentrics, as babbitt is too soft to stand the wear and tear incident to such work. They should also be dust proof and easy of access.

From the breakers the ore should go to small storage bins of a few tons capacity, from which to be delivered to the mill storage bins at the top of the mill building, which should hold at least 16 hours' supply.

A good deal of the mine water could be used for steam and concentration and from 100 to 120 gallons per ton of ore treated would be required.

The mill should be built in sections to facilitate repairs, experiments, etc. Each section would consist of rolls, trommels, coarse and fine jigs, ball mill, slime tables, Wilfley tables, vanners, spitzkasten, elevators, and pumps.

The following mill has a capacity of about 575 tons per 24 hours. It is divided into 4 sections which will be described below in total. Three 8-hour shifts per day, seven days a week, are employed in running the mill.

1. Mill storage-bins. From two Gates No. 5 breakers via bin; deliver to (2). Hold 16 hours' supply of ore. Eighty horse-power is required for both breakers.

2. Four conical trommels with 0.125-inch round holes punched in 14-gauge iron. From (1); deliver oversize to (3) and undersize to (5). Dimensions, 6 × 2 and 3 feet. Speed 12 revolutions per minute. Supported on external rollers. Require 2 horse-power.

3. Four Cornish rolls, 15 × 30 inches. From (2) and (4); deliver crushed ore to (4). Fed with 4 feed rollers which, together with the rolls, require 114 horse-power. Each set consists of one plane roll and one flanged, into which the plane one fits. Have coned centers bolted together so that shells may be easily removed. Speed, 15 revolutions per minute. Capacity, about 145 tons per 24 hours, crushing from 1.50 to 0.125 inch. Manganese or Vickers-Maxim steel shells used. The latter are not as hard as manganese steel but have a longer life. They are very homogeneous and can be turned down on the outside surface. From 3 to 5% of nickel in steel increased the wearing qualities wonderfully and made for hardness and toughness.

4. Eight trommels with 2.5-millimeter round holes punched in 14-gauge iron. From (3); deliver oversize to (3) and undersize to (5). Dimensions, 22 × 72 inches. Speed, 20 revolutions per minute. Slope, 1 inch to the foot. Require 4 horse-power.

5. Four hydraulic classifiers. From (2) and (4); deliver spigots to (6) and slimes in overflow to (11). Conical iron casting 0.625 inch thick. Two feet in diameter at base and 2.5 feet deep. The apex points down and is perforated by two 0.625-inch holes for water inlet and one hole for spigot discharge. Inlet water so regulated that there is always a slight overflow at the top of the classifier.

6. Four coarse jigs. From (5); deliver first discharges from hoppers to (16), second discharges to (16), third and fourth discharges to (7), and fifth discharges to (17). May Brothers' patent jigs composed of 8 working and 2 tailings compartments arranged 5 on a side. Each working compartment consists of a hopper with a hutch and separate plunger at the top. Each hutch is 2.5 × 3.5 feet and has a sieve composed of 6-mesh woven brass-wire, screen resting on cross bars of iron and kept in place by iron guides placed on top and bolted to the cross bars. Each plunger is 14 × 42 inches and has a clack-opening 0.5 × 2.5 inches to give as little suction as possible. The clack is a pine board with 0.625-inch clearance, loosely bolted to the plunger. A quick upward and slow downward motion of the water is obtained and the agitated ore particles settle somewhat according to their specific gravities. The clack does away with much of the classification which was previously necessary. Plungers make 180 strokes per minute. The jigs handle from 6 to 7 tons per hour each and the total power required is 8 horse-power.

7. Four Krupp ball mills. From (6) and (9); deliver material, crushed to 25 to 30 mesh, to (8). Speed, 30 revolutions per minute. Require 40 horse-power.

8. Four hydraulic classifiers. From (7); deliver spigots to (9) and slimes in overflow to (11). Similar to (5).

9. Four fine jigs. From (8); deliver discharges from first hoppers and hutches to (16), discharges from second hutches to (16), discharges from third and fourth hutches to (7), and discharges from fifth hutches to (10). Similar to (6). Hutches are 24 × 40 inches. Plungers are 12 × 40 inches and make 200 strokes per minute. Each jig handles 4.5 tons per hour and the total power required is 6 horse-power.

10. Zinc-middlings dump. From (9) and (12). Saved for further treatment.

11. Four Spitzkasten. From (5) and (8); deliver spigots to (12) and overflows to (13). Made of plank 2 inches thick. Dimensions: Length at top,

15 feet; bottom, 10 feet; breadth at top, 2.67 feet widening out to 7.08 feet at the end; depth, 2.08 feet at the head, sloping to 4.67 feet.

12. Four Wilfley tables. From (11), fed with 30-mesh material; deliver concentrates to (16), middlings to (10), and tailings to waste. Speed 220 to 240 strokes per minute. Capacity at 30 mesh, 1 ton per hour; and below 30 mesh, 0.5 ton per hour per table. Power required, 3 horse-power.

13. Four classifiers. From (11); deliver spigots to (14) and overflows to (15).

14. Twenty-four Warren belt vanners and two Krupp tables. From (13); deliver concentrates to (16) and tailings to waste. Krupp tables similar to Wilfley tables. In all 15 horse-power is required.

15. Settling tanks. From (13); deliver water to system and overflows to waste. Usually rectangular in plan and have sloping bottoms containing suitable discharging facilities for the settled slimes. They may be made of timber, iron, or masonry.

16. Concentrates bin. From (6), (9), (12), and (14); delivers to smelter.

17. Dump. From (6). Waste.

Raff wheels and elevators are used for elevating returned stuff. Raff wheels are 14 feet in diameter and make 15 revolutions per minute. Elevators of good form have buckets 5 × 5 × 7 inches bolted to a belt 8 inches wide at an interval of 15 inches. The driving is performed from above by cog wheels geared 3:1. The bucket belt passes around drums at the top and bottom; 2 feet in diameter, at a speed of 250 feet per minute. A good slope for elevators is about 80°. The above mill would require 4 elevators or Raff wheels which would take 20 horse-power. The mill would also require:

5 slimes pumps requiring	10	horse-power.
1 water-circulating pump requiring	25	"
1 " " " "	10	"
1 " " " "	1	"
Total for water and slimes distribution	46	"

The clear water from the settling tanks is pumped to the mill-circulating tanks. These are placed high enough for all mill purposes, are generally cylindrical in form, and made of iron. They deliver to the mill system again.

It is estimated that for every ton of ore undergoing treatment, there are 1,500 gallons of water in the mill at the same time. The loss of water is from 100 to 120 gallons per ton of ore treated.

The total power required is 338 horse-power.

A mill arranged as the above mill will probably give from each ton of crude ore:

20% of concentrates	7% of vanner tailings
20 " " jig tailings	45 " zinc middlings
7 " " fine slimes	1 " unaccounted for.

§ 1461. MILL NO. 129. NEW MILL OF THE BROKEN HILL PROPRIETARY MINE, BROKEN HILL, NEW SOUTH WALES, AUSTRALIA. — The ores treated are complex but consists principally of argentiferous galena and sphalerite with some carbonates. The gangue is principally quartz and rhodonite.[71]

The mill has a capacity of 1,000 tons per day and is operated three 8-hour shifts per day, 6 days in the week.

(*Rock House serving mill described and the old mill of equal capacity*).

Ore from the mine cars goes to (1).

1. Four tipping cradles. From the mine cars; deliver to (2).
2. Four grizzlies of tempered manganese steel, with 2-inch spaces between

the bars. From (1); deliver oversize to (3) and undersize to (5). The grizzlies have a life of about 1 year.

3. Storage bins with a total capacity of 800 tons. From (2); deliver to (4).

4. Five No. 5 Gates breakers, having openings of 10 × 30 inches in the spider and set to break to 2 inches. The cast-iron cones of the breakers are covered with a removable mantle of toughened steel, and the mortar shell is lined with manganese steel. The life of the mantles is 1,350 hours and that of the liners 2,700 hours. With liners and mantles both of the same material, the surfaces would wear too smooth and the ore would not be gripped properly. Many combinations were tried, but the materials as above gave the most economical results. From (3); deliver crushed ore to (5).

5. Storage bins. From (2) and (4); deliver, via 1-ton trucks, to (6).

6. Hydraulic lift which elevates two loaded trucks at a time. From (5); delivers alternate truck loads to the old and new mill respectively.

New Mill.

Ore from the trucks coming from (6) is dumped to (7).

7. Storage bins. From (6); deliver to (8).

8. Three roll-feeders assisted by water jets. From (7); deliver, via chutes, to (9). As the ore passes through these chutes a man takes a scoop sample every hour. The total weight taken during an 8-hour shift is approximately 700 pounds. This sample goes to the sample mill where it is crushed down and subdivided until a portion is obtained not too large for the assay office.

9. Three sets of rolls, 15 inches wide, 36 inches in diameter, set 0.375 to 0.5 inch apart, and making 37 revolutions per minute. The roll shells are of toughened steel 4.125 inches thick and have a life of about 3,000 hours. From (8); deliver crushed ore to (10).

10. Three shaking screens with holes 0.09375 inch in diameter. From (9); deliver oversize to (11) and undersize to (25).

11. Balata belt conveyor. From (10); delivers to (12).

12. Elevator. From (11); delivers to (13).

13. Bins. From (12); deliver, via automatic feeders, to (14).

14. Three sets of rolls with same details as (9), but set 0.125 to 0.1875 inch apart and making 45 revolutions per minute. From (13); deliver crushed ore to (15).

15. Three shaking screens with holes 0.09375 inch in diameter. From (14); deliver oversize to (16) and undersize to (25).

16. Balata belt conveyor. From (15); delivers to (17).

17. Elevator. From (16); delivers to (18).

18. Bins. From (17); deliver, via automatic feeders, to (19).

19. Two sets of rolls with details same as (9) and (14), but set 0.0625 inch apart, and making 78 revolutions per minute. From (18); deliver crushed ore to (20).

20. Two shaking screens with holes 0.09375 inch in diameter. From (19); deliver oversize to (21) and undersize to (25).

21. Balata belt conveyor. From (20); delivers to (22).

22. Elevator. From (21); delivers to (23).

23. Bin. From (22); delivers, via automatic feeder, to (24).

24. No. 5 Krupp ball mill crushing wet through screens with holes 0.09375 inch in diameter. From (23); delivers to (25).

25. Cone classifier. From (10), (15), (20), and (24); delivers spigot to (26) and overflow to (36).

26. Five-compartment May plunger jig. From (25); delivers first two hutch products, assaying about 60% in lead, to (27); the third and fourth hutch products, assaying about 10% in lead, 19% in zinc, and 10 ounces in silver per ton, to (29); and the products from the fifth compartment, as tailings, assaying about 3 or 4% in lead, to (28).

27. Lead-concentrates bin. From (26); delivers, via cars, to smelter at Port Pirie.

28. Shaking screen with 40 meshes to the inch. From (26); delivers oversize, via trucks, to tailings dump, and undersize to the zinc plant.

29. No. 4 Krupp ball mill with screens having slots 0.03125 inch wide. From (26); delivers pulp to (30).

30. Bucket elevator. From (29) and (34); delivers to (31).

31. Cone classifier. From (30); delivers spigot to (32) and overflow to (36).

32. Five-compartment May plunger jigs. From (31); deliver first two hutch products, assaying 40% in lead, 13% in zinc, and 22 ounces in silver per ton, to (33); third and fourth hutch products, assaying about 9% in lead, 18% in zinc, and 10 ounces in silver per ton, to (34); and products from the fifth compartments, as tailings, assaying 5.5% in lead, 18% in zinc, and 8 ounces in silver per ton, to (35).

33. Lead-concentrates bins. From (32); deliver, via cars, to smelter at Port Pirie.

34. No. 4 Krupp ball mill with screens having slots 0.0222 inch wide. From (32); delivers pulp to (30).

35. Shaking screen with 40 meshes to the inch. From (32); delivers oversize, via trucks, to tailings dump and undersize to the zinc plant.

36. Spitzkasten with 5 spigots each. From (25) and (31); deliver first spigots to (37), second, third, fourth, and fifth spigots to (39), and overflows to (43).

37. Wilfley tables. From (36); deliver concentrates to (42), middlings to (38), tailings to the zinc plant, and slimy headwaters to (43).

38. Wilfley tables. From (37) and (38); deliver concentrates to (42), middlings to (38), tailings to the zinc plant, and slimy headwaters to (43).

39. Lührig vanners. From (36); deliver concentrates to (42), middlings to (40), tailings to the zinc plant, and slimes to (43).

40. Cone classifier. From (39); delivers spigot to (41) and overflow to (43).

41. Lührig vanners. From (40); deliver concentrates to (42) and tailings to the zinc plant.

42. Fine lead-concentrates bins. From (37), (38), (39), and (41); deliver, via cars, to smelter.

43. Iron settling-tanks. From (36), (37), (38), (39), (40), and slimes from old concentrating mill; deliver settled slimes to (44) and water to waste. About 1,500 tons of slimes, or 12% of the total ore treated in both mills, are handled per week.

44. Slimes drying floors alongside the railroad. From (43); deliver dried slimes, via cars, to (45). The slimes, in a semi-fluid condition, are run out upon the ground in a layer from 9 to 12 inches thick and allowed to dry for a couple of days. Then, while still plastic, they are cut in blocks 4 to 6 inches across with spades. These blocks are allowed to dry for 4 to 6 days more, according to the weather, when they are shipped, as above.

45. Sintering Works about 5 miles out of Broken Hill. From (44); deliver sintered and roasted slimes to the smelters. The blocks of dried slimes are built into heaps with air channels at the bottom. The sides of the heaps are plastered over with wet fine slimes, an opening being left at the top for fumes to

escape through. A small wood fire is then kindled at the entrance to the air channels and kept burning for a day or two. At the end of this time the heaps are burning well and are red-hot inside. After 10 or 15 days the heaps are considered burnt and are broken up as soon as cool enough to be handled. The slimes before burning assay about 17% in lead, 17.5 ounces in silver per ton, 16% in zinc, and 12.5% in sulphur. After burning the sinter assays about 14.5% in lead, 15.8 ounces in silver per ton, 12.5% in zinc, and 7.1% in sulphur. The loss in metal is considerable, but the operation is cheap and the sintered lumps are hard and porous, and almost an ideal smelting product.

The recovery of lead is as follows:

In the first jigs	47.5	percent.
In the second jigs	13.5	"
On the Wilfley tables	3.15	"
On the Lührig vanners	3.15	"
Total recovery	67.30	"

Quantity of ore handled per hour:

First jigs (each)	5.75	tons.
Second jigs (each)	2.75	"
Wilfley tables (each)	0.75	"
Lührig vanners (each)	0.167	"

Assay of Products.

Lead concentrates average	55	percent	in	Pb.,	10	percent	in	Zn.	and	26	ounces	in	silver	per	ton.
Coarse tailings	"	4	"	"	"	12	"	"	"	"	5	"	"	"	"	"
Fine tailings	"	5	"	"	"	17	"	"	"	"	8	"	"	"	"	"
Slimes	"	17	"	"	"	16	"	"	"	"	17.5	"	"	"	"	"

The coarse tailings which amount to about 3,500 tons per week, while they go to the dumps, are reserved for future grinding and treatment to recover their zinc content.

The lead concentrates amount to about 2,200 tons per week.

Zinc Plant Using the Delprat Flotation Process.

The fine tailings from (28), (35), (37), (38), (39), and (41) are delivered, via 8-ton trucks over an elevated railroad, to (46).

46. Storage bins. From trucks; deliver, via automatic feeders, to (47).

47. Six pyramidal wooden flotation-vats. From (46) and (54), and solution from (58); deliver overflows of concentrates, via launder, to (51) and spigot discharges to (48). Each vat treats from 10 to 12 tons of material per hour.

48. Collecting box. From (47); delivers to (49).

49. V-troughed rubber conveying-belt running up hill. From (48); delivers solution, at lower end, to (55) and solids, at upper end, to (50).

50. Belt conveyor. From (49); delivers the waste to an open cut, from which the material goes, via various waste chutes, back into the mine where it is used for filling.

51. Six wooden tanks of about 50 tons capacity each. From (47); deliver concentrates, after they have been drained and washed free from chemicals, to railway cars, and thence to smelter. Overflows go to (52) and drainings to (53).

52. Intermediate solution-tank. From (51); delivers, via air lift and a return-solution launder, to (54).

53. Settling tank. From (51) and (56); delivers solution, via air lift and a return-solution launder, to (51).

54. Spitzkasten. From (52); delivers overflow to (57) and spigot to (47).

55. Settling tank. From (49); delivers solution to (56).

56. Settling tank. From (55); delivers solution to (53).

57. Settling tank. From (54); delivers solution, via air lift, to (58).

58. Stock-solution tank. From (57); delivers to (47).

The liquor used in the vats is a solution of $NaHSO_4$. The most advantageous temperature is about 180° Fahrenheit, and steam at 500° Fahrenheit is introduced into the solution vats to keep the temperature as near this point as possible. All vats, launders, etc., are lined with sheet lead.

For a full description of the Delprat process see Ore Dressing, page 1561.

§ 1462. MILL NO. 130. MINERALS SEPARATION PROCESS AS PRACTISED BY THE SULPHIDE CORPORATION, LIMITED, CENTRAL MINE, BROKEN HILL, NEW SOUTH WALES, AUSTRALIA.[143] — The capacity of this plant is from 4,000 to 4,400 tons per week of 6 days, and it is designed to extract in one continuous automatic operation the bulk of the silver-bearing galena and the sphalerite from the gangue which is composed of about equal portions of quartz and rhodonite with a little calcite. The rhodonite changes to rhodochrosite in the lower levels. The ore therefore belongs to the intermediate class, being harder to treat than the quartz-calcite ores and less refractory than the ores of the British-Junction North group. The mill is one of the most complete in the district and represents the only attempted and successful method of extracting both lead and zinc values in one continuous process. There is no intermediate handling of the product and there is no separation of sands and slimes. The zinc recovery process works as well in the presence of slimes as it does on clean sands; in fact, it appears to work somewhat better when a certain percentage of slimes is present. The mill was built in 1907.[11]

Ore comes from the mine in cars and is delivered to (1).

Rock House.

1. Weigh-bridge. From the mine; delivers to (2).

2. Grizzly with 1.5-inch spaces between the bars. From (1); delivers oversize to (3) and undersize to (5).

3. Crude-ore bin. From (2); delivers to (4).

4. Two Hadfield size S gyratory breakers. In capacity they are equivalent to a Gates No. 6 and in this case each is capable of breaking 60 tons per hour from 12 to 1.5-inch cubes. Both are driven by a 100 horse-power motor which, as a rule, does not register more than 50 horse-power. One is run and one held in reserve. From (3); deliver ore crushed to 1.5 inches to (5).

5. Storage bin. From (2) and (4); delivers to (6).

Tramway.

6. Bleichert aerial tramway, 1,575 feet long with a rise of 41 feet in the direction of the traffic. The buckets, which hold 1,500 pounds each, are automatically gripped, released, and dumped. The ropeway has a capacity of 90 tons per hour and 120 buckets, spaced 100 feet apart, are moved per hour. They run at intervals of 30 seconds and at a speed of 200 feet per minute. The carrying ropes for the loaded cars are 1.625 inches in diameter with surface wires locked so as to afford a smooth traveling surface and prevent a broken strand projecting. The rope has a breaking strain of 60 tons per square inch. The rope for the empties is similar in construction, but only 1 inch in diameter.

The traction rope is 0.66 inch in diameter and has a breaking strain of 115 tons per square inch. This rope is endless and in continuous motion, running below and parallel to the main carrying ropes. The whole system, when under full load, requires about 12 horse-power which is supplied by a motor. From (5); delivers to (7).

Galena Extraction Plant.

The galena concentrating mill is divided into 4 sections which may be worked independently of each other. Only one section will be described.

7. Mill ore storage bin of 320 tons capacity. From (6); delivers, via automatic feed roller, to (8).

8. Bucket elevator. From (7); delivers to (9).

9. Coarse rolls, 15 × 30 inches, set about 0.5 inch apart. The flanged roll makes 15.5, and the plain roll 14 revolutions per minute. The tires are of toughened cast steel and have a life varying up to 290 working days. A choke feed is employed. From (8) and (12); deliver crushed ore to (10).

10. Shaking screen with 0.125-inch round holes punched in steel plate. From (9); delivers oversize to (11) and undersize to (13).

11. Fine rolls, 15 × 30 inches, set face to face for friction drive and making 28 revolutions per minute. Other details as in (9). From (10); deliver crushed ore to (12).

12. Bucket elevator. From (11); delivers to (9).

13. Two slimes classifiers. From (10); deliver spigots to (14) and overflows to (18).

14. One double 4-compartment May Brothers' jig with a total capacity of about 1,000 tons per week of six days. From (13) and (14); delivers the first two hutch products, as galena concentrates, to (27); the third hutch products, as middlings, to (14); the fourth hutch products, as tailings, to (15); and the overflow water to (32).

15. Two central-feed positive 8-foot grinding pans making 30 revolutions per minute. A free discharge is maintained at the periphery of the pan so the sands only pass under the muller once and through the pan. From (14); deliver pulp to (16).

16. Spitzkasten. From (15); delivers spigot to (17) and overflow to (18).

17. One central-feed positive 8-foot grinding pan with details as in (15), except that this pan discharges by overflow. Receives from (16) about 52% of the feed to (15) and delivers pulp to (18).

The efficiency of (15) and (17) will be seen from the following sizing test:

	Percent on 2 Millimeters.	Percent on 1 Millimeter.	Percent on 0.5 millimeter.	Percent on 130 mesh.	Percent through 130 mesh.
Jig tailings	21.8	40.3	21.9	15.1	0.8
Discharge of positive pans (15)	0.8	6.3	34.6	42.5	15.7
Discharge final pan (17)	0.0	0.0	5.5	59.7	34.7

18. Sump which serves two sections. From (13), (16), and (17); delivers to (19).

19. Two 5-inch centrifugal pumps which serve two sections. From (18); deliver pulp to (20).

20. Three V-shaped settling boxes. Common to two sections. From (19) and (21); deliver spigots to (21) and overflows to (22).

21. Five Card tables. From (20); deliver galena concentrates to (28), middlings to (23), tailings to (24), and headwaters to (20).

22. Pulp thickener with 4 spigots. From (20) and (33); delivers spigots to (25) and overflow to (29).

23. One Wilfley table. From (21); delivers galena concentrates to (28) and the tailings to (24).

24. One 36-inch conveying and draining belt, of cocoa-nut fiber matting, with a scraper under the belt and near the discharge end to keep the pulley free from slimes. The belt is of 6-ply rubber with a conveying length of 112

feet and a speed of 30 feet per minute. Driven by worm and gear. Common to two sections. From (21), (23), and (26); delivers drainings to (29) and residue to (31).

25. Two elevators. From (22) and (26); deliver, via two distributing boxes, to (26).

26. Four double-belt Krupp vanners. From (25); deliver galena concentrates to (28), middlings to (25), and tailings to (24).

27. Three coarse-galena loading bins with filter bottoms. From (14); deliver concentrates, via railroad cars, to smelter and drainings to (32).

28. Four iron fine-galena loading bins. From (21), (23), and (26); deliver concentrates, via railroad cars, to smelter and drainings to (32).

29. Eight 16-foot circular wooden vats with peripheral overflows and filter bottoms of coir matting. Serve all four sections and worked in series to secure the minimum of solids in suspension in the final filtrates. From (22) and (24); deliver settlings, via 8 cylindrical discharge gates, to (30), overflow and filtrates to (32).

30. One 24-inch belt conveyor with a conveying length of 264 feet. Common to four sections. From (29); delivers, in two equal quantities, to (31).

31. Two 18-inch belt conveyors of 5-ply rubber belting having conveying lengths of 116 feet, speeds of 130 feet per minute, and inclinations of 21°. Common to four sections. From (24) and (30); deliver to (36).

32. Two 8-inch centrifugal pumps, each having a capacity of 90,000 gallons per hour. Together they return about 120,000 gallons per hour. Common to four sections. From (14), (27), (28), (29), (44), and all drainage water from both mills; deliver to (33).

33. Two concrete storage-tanks with a total capacity of 350,000 gallons. Common to four sections. From (32); deliver settled slimes, periodically, to (22) and clarified water to (34).

34. Two pumps. One a Worthington turbine and the other an auxiliary volute. Common to four sections and together they have a capacity of 2,500 gallons of water per minute. From (33); deliver to (35).

35. One overhead V-shaped water-supply tank. Common to four sections. From (34); delivers to jigs, tables, and the whole mill system.

The bins, rolls, jigs, and grinding pans are located on one side of a single railroad line. The Card tables and Krupp vanners are located on the other side of the railroad, so all the concentrates are loaded directly into the cars without a second handling.

The following table shows the approximate results:

Material.	Tons per Week.	Assay.			Percent Extraction.		
		Ounces per Ton Silver.	Percent Lead.	Percent Zinc.	Silver.	Lead.	Zinc.
Crude ore	4,000	12.5	15.5	19.0			
Galena concentrates	720	32.0	53.0	10.0	46.1	73.2	9.5
Feed to (36)	3,280	8.2	5.1	20.4	53.9	26.8	90.5

The feed to (36) contains 18% of water and gives the following sizing test: On 0.5 millimeter, 3.4%; through 0.5 millimeter and on 80 mesh, 65.5%; through 80 and on 130 mesh, 6.9%; through 130 and on 160 mesh, 6.9%; through 160 mesh, 17.3%.

Sphalerite Extraction Plant.

Flotation process of the Minerals Separation Company, Limited.

This department is divided into two sections, one of which will be described.

36. Feed bin. From (31); delivers to (37).

37. Twelve mixing vats arranged in six rows of two each. The first row receives sulphuric acid from (53), acid liquor from (56), water from (58), and ore from (36). Steam pipes, in all the mixers, raise and hold the temperature of the solution to about 120° Fahrenheit. The first row of tanks delivers to the second row, which also receives about 1 pound of oleine from (52) per ton of ore treated, and acid liquor from (56). Between 10 and 15 pounds of sulphuric acid are consumed per ton of ore treated, and the ratio of ore to solution, at this point, is as 3 is to 10. The second row delivers to the third and so on to the sixth, which delivers to (38).

The zincy slimes are fed continuously with the grainy residues into (37) by means of suitable plows. This regular introduction of fine slimes with the feed is an important factor in the success of the process, and enables the whole of the residues from the lead mill to be profitably treated in one continuous operation. The feed, in passing vats (37), is thoroughly aerated by special agitation and brought into intimate contact with the circuit liquor, to which oil and acid is added in the vats as required. The effect of aeration under suitable conditions in (37) is manifested by granulation of the metallic sulphides, so that when the granulated pulp passes from (37) into (38) flotation of the sulphides is at once effected, while the gangue sinks and is drawn off at the bottom of the spitzkasten (38). The sulphides form a scum on the surface of the liquor and are recovered from the overflow.

38. One flotation spitzkasten, 5 × 5 × 5 feet, with a baffle plate which extends 18 inches below the surface of the pulp. The underflow is less than the inflow and the excess solution flows over the lip at the front of the spitzkasten. From (37); delivers overflow of sphalerite concentrates to (41) and spigot to (39).

39. One flotation spitzkasten with details as in (38). From (38); delivers overflow of sphalerite concentrates to (41) and spigot to (40).

40. One flotation spitzkasten with details as in (38). From (39); delivers overflow of sphalerite concentrates to (41) and spigot to (45).

41. Conveying and draining belt of cocoa-nut fiber matting. From (38), (39), (40), and (46); delivers drainings to (54) and residues to (42).

42. Elevator. From (41); delivers to (43).

43. Conveying and distributing belt. From (42); delivers to (44).

44. Concentrates draining and loading floor. From (43) and (57); delivers sphalerite concentrates, via railroad cars, to smelter, and drainings to (32).

45. Elevator. From (40); delivers to (46).

46. One flotation spitzkasten with details as in (38). Common to both sections. From (45); delivers overflow of sphalerite concentrates to (41) and spigot to (47).

47. Four residue filtration-vats provided with filter bottoms. From (46); deliver filtered residues to (48) and filtrates to (57).

48. Conveyor belt. From (47); delivers to (49).

49. Inclined conveyor belt or tailings stacker. From (48); delivers to dump.

50. Oil-storage tank. Common to both sections. From the market; delivers, via air lift pump, to (52).

51. Acid-storage tank. Common to both sections. From the market; delivers sulphuric acid, via air lift pump, to (53).

52. Oil tank. From (50) and, during the winter, steam from the boilers; delivers to (37).

53. Acid tank. From (51); delivers to (37).

54. Sump. From (41), (57), and (58); delivers to (55).

55. Centrifugal pump. From (54); delivers to (56).

56. Acid liquor tank. From (55); delivers to (37).

57. Storage tank. From (47); delivers sediment to (44) and overflow to (54).

58. Two main water-storage tanks. Common to both mills and all sections. From the water main; deliver to (37), (54), and the boilers for feed water.

The sphalerite concentrates run about 19.0 ounces in silver per ton, 12.0% in lead, and 43.0% in zinc, and represent a recovery of about 68.0% of the silver, 80% of the lead, and 80% of the zinc in the feed to (36).

The total recoveries from the crude ore are therefore 82.8% of the silver, 95.0% of the lead, and 82.0% of the zinc. The 9.5% of zinc in the lead concentrates and part of the silver and lead in the zinc concentrates are not paid for and therefore must be deducted from the total recoveries. Nevertheless, even with these deductions, the final results are highly satisfactory.

Power.

The machinery for the whole mill is actuated by electric motors furnished with a 550-volt, 3-phase, 40-cycle current supplied from a central power station, which delivers power to the lead-zinc mill, the rock breakers, aerial tramway, and other places. The equipment comprises five generating sets, each consisting of a Bellis-Morcom compound-expansion, self-lubricating, engine direct coupled with a general electric alternating-current generator. These engines are each of 325 indicated horse-power and run at 400 revolutions per minute with steam at 150 pounds, exhausting to the atmosphere. The engine dimensions are 13 × 22 × 10 inches. In addition to the above there is another Bellis-Morcum engine direct coupled to a direct-current generator. The total electrical output of the power house is 1,340 kilowatts.

In total about 600 horse-power is required for the whole of the galena mill and it is distributed as follows:

	Number.	Horse-power of Motors.	Horse-power Furnished.	Horse-power Consumed.
Two breakers (4)	1	100	100	50
One aerial tramway (6)	1	25	25	12
Four sections	4	75	300	276
" elevators (8)				20
" coarse rolls (9)				64
" shaking screens (10)				20
" fine rolls (11)				40
" elevators (12)				12
" jigs (14)				16
Eight grinding pans (15)				64
Four " " (17)				40
Two sections including (19), (21), (23), (24), (25), (26), (30), (31), and (32)	4	20	80	
Two pumps (34)	2	{40 55	95	70

Re-treatment Plant.

In conjunction with the Minerals Separation Company, Limited,[144] the company has erected a tailings re-treatment plant also capable of handling 4,000 tons per week of 6 days. The arrangement of this plant is similar to the galena plant already described. A sizing test of the feed to the pans and the final product as fed to the mixers follows:

	Crude Tailings. Percent.	Feed to Mixers. Percent.
On 2 millimeters	1.5	.....
" 1 millimeter	25.9	.....
" 0.5 "	14.8	2.0
" 80 mesh	47.4	67.8
" 130 "	1.5	8.0
" 180 "	8.9	8.0
Through 180 "	.....	14.2
Totals	100.0	100.0

The re-ground ore is treated in exactly the same way as the tailings from the above-described galena mill.

The recoveries in this re-treatment plant are slightly different to those obtained in the current tailings plant, being 76.0% of the total silver, 66.0% of the total lead, and 82.0% of the total zinc. The sphalerite concentrates assay 15.0 ounces in silver per ton, 10.8% in lead, and 45.6% in zinc.

The suggestion has been made that the weathering of the minerals in the dumps probably affects the selective action of the gas bubbles in the separators, and that this accounts for the difference in the percentage recoveries of the several metals from accumulated and current tailings respectively.

Costs.

The grinding costs per ton are as follows: Labor, 8.27 cents; maintenance, 10.71 cents; power, 8.76 cents; total, 27.74 cents. These costs are based on 3,500 tons per week of 6 days, and as the capacity of the plant has been increased to 4,000 tons per week without adding extra pans, it is only reasonable to consider that these costs are in excess of present costs.

The total costs on the re-treatment plant are about $1.46 per ton.

§ 1463. MILL NO. 131. THE DALY-JUDGE MILL, PARK CITY, UTAH.[86] — This mill has a capacity of about 400 tons per 24 hours.[30] It is built on a hillside and has four main floors; the bin floor, breaker-roll floor, jig and Huntington floor, and two table floors. The ore consists of the economic minerals galena, sphalerite, and pyrite, with silver values in a gangue of limestone and quartzite, and runs about 10.0% in lead, 9.0% in zinc, and 7.0 ounces in silver per ton. The ore is trammed from the mine in cars [184] and delivered to (1).

1. Two ore bins with a total capacity of 450 tons, each bin being divided into three sections and having gates operated by rack and pinion. From mine cars; deliver to (2).

2. Cars. From (1); deliver, via platform scales, to (3).

3. Grizzly with bars, 2.5 × 0.625 inch at the top tapering to 0.5 inch at the bottom, and spaced 1 inch apart. From (2); delivers oversize to (4) and undersize to (5).

4. Blake breaker, with a 9 × 15-inch jaw opening, making 225 thrusts per minute. The jaw plates last about 8 months. From (3); delivers crushed ore to (5).

5. Plunger feeder, 6 × 16 inches. Water is introduced here. From (3) and (4); delivers to(6).

6. Allis-Chalmers rolls, 15 × 36 inches, making 50 revolutions per minute. The shells last from 6 to 8 months. From (5); deliver crushed ore to (7).

7. Trommel, 3 × 6 feet, making 16 revolutions per minute, having a 3-mesh, 10-wire cloth screen and a slope of 0.75 inch to the foot. From (6); delivers oversize to (8) and undersize to (9).

8. Allis-Chalmers rolls, 15 × 26 inches, making 100 revolutions per minute. Shells last from 4 to 5 months. From (7); deliver crushed ore to (9).

9. Elevator with a 10-ply belt having a 0.125-inch rubber friction surface, a speed of about 300 feet per minute, a life of 26 to 28 months, and buckets, 5 × 8 × 16 inches, spaced 17 inches apart, and having a life of about one year. From (7) and (8); delivers to (10).

10. Trommel having a 2-mesh, 6-wire cloth screen and other details as in (7). From (9); delivers oversize to (14) and undersize to (11).

11. Trommel having a 3-mesh, 10-wire cloth screen and other details as in (7). From (10); delivers oversize to (14) and undersize to (12).

12. Trommel having a 4-mesh, 12-wire cloth screen and other details as in (7). From (11); delivers oversize to (15) and undersize to (13).

13. Trommel having a 6-mesh, 15-wire cloth screen and other details as in (7). From (12); delivers oversize to (16) and undersize to (18).

14. One 3-compartment Harz jig. The first two compartments have 4-mesh, 12-wire cloth sieves and the third compartment has a 3-mesh, 10-wire cloth sieve. The plungers make 150 0.75-inch strokes per minute. From (10) and (11); delivers side discharges, as concentrates, to (20) and tailings to (19).

15. One 3-compartment Harz jig. The first compartment has a 4-mesh, 12-wire cloth sieve and the last two compartments have 6-mesh, 15-wire cloth sieves. The plungers make 160 0.5-inch strokes per minute. From (12); delivers side discharges, as concentrates, to (20) and tailings to (19).

16. One 3-compartment Harz jig with sieves as in (15). The plungers make 275 0.375-inch strokes per minute. From (13); delivers side discharges, as concentrates, to (20) and tailings to (25).

17. Two 3-compartment Harz jigs with 6-mesh, 15-wire cloth sieves on all compartments. The plungers make 290 0.25-inch strokes per minute. From (18); deliver hutch products, as concentrates, to (20) and tailings to (21).

18. Settling tank, 4 feet in diameter by 2.5 feet deep, with a circular launder around the top. From (13); delivers spigot to (17) and overflow to (26).

19. Elevator with all details as in (9); except as to the life of the belt and buckets. From (14), (15), and (33); delivers to (22).

20. Concentrates bin, 3.5 feet square at the top and 4.75 feet deep at the center. The sides are vertical for 10 inches from the top and then taper to 1 foot square at the bottom. From (14), (15), (16), and (17); delivers, via slide gate in the bottom, to (31).

21. Elevator with details as in (19). From (17) and (24); delivers to (27).

22. Hub dewatering wheel, 3 feet in diameter. Designed by J. D. Fleming. Runs backwards and the sands are pushed instead of being dipped from the water. From (19); delivers water-drained ore to (23) and water with some pulp to (30).

23. Huntington storage bin. From (22) and (30); delivers to (24).

24. Two 5-foot Huntington mills. From (23); deliver pulp through 16-mesh screens to (21).

25. One 3-compartment Harz jig with 4-mesh, 12-wire cloth sieves on all compartments. The plungers make 275 0.5-inch strokes per minute. From (16); delivers hutch products, as concentrates, to (31) and tailings to waste.

26. Main settling tank, 48 feet long by 4 feet wide by 6 feet deep. The sides are vertical for 4 feet from the top and the tank is divided into 11 compartments with V-shaped bottoms. From (18), (27), (29), and (30); delivers spigots to (32) and overflow, via 2-inch pipe from the side, to (40).

27. Dewatering tank, 4 × 4 × 4 feet, one side vertical for one foot from the top and then sloping to a width of 8 inches at the bottom. From (21); delivers spigot to (28) and overflow to (26).

28. Callow screen with a 16-mesh, 20-wire cloth screen. From (27); delivers oversize to (33) and undersize to (29).

29. Callow screen with a 20-mesh, 30-wire cloth screen. From (28); delivers oversize and undersize to different compartments in (26).

30. Trommel (chip screen) with a 6-mesh, 15-wire cloth screen. From (22); delivers oversize to (23) and undersize to (26).

31. Main concentrates bin divided into three compartments for galena, pyrite, and sphalerite concentrates respectively. From (20), (25), (32), (33), (41), (42), (44), (45), and (47); delivers, via cars, to sampler.

32. Nine Wilfley tables. From (26); deliver galena concentrates to (31), sphalerite middlings to (35), pyrite middlings to (34), (37), and (46).

33. One 3-compartment Harz jig with 6-mesh, 15-wire cloth sieves on all compartments. From (28); delivers hutch products, as concentrates, to (19) and (31), and tailings to waste.

34. Frenier sand pump. From (32) and (45); delivers to (38).

35. Bin for sphalerite product. From (32), (42), and (44); delivers to (36).

36. Revolving classifier. From (35); delivers three sizes to (45).

37. Centrifugal pump. From (32) and (45); delivers to (39).

38. Settling tank, 16 feet long by 2.5 feet wide by 3 feet deep. The sides are vertical for 1.33 feet from the top and it has four compartments with V-shaped bottoms. From (34); delivers spigots to (42) and no overflow.

39. Trommel running partly submerged in the water of (43). From (37); delivers oversize to waste and undersize to (43).

40. Slimes-settling tank, 32 feet long by 3.67 feet wide by 4.5 feet deep, with 8 compartments. From (26); delivers spigot to (41) and overflow to waste.

41. One Wilfley table. From (40); delivers concentrates to (31) and tailings to waste.

42. Three Wilfley tables. From (38); deliver concentrates to (31), (35), and (46) and tailings to waste.

43. Settling tank, 14 feet long by 3.5 feet wide by 3.5 feet deep, with sides vertical for 1.5 feet from the top. From (39); delivers spigots to (44) and no overflow.

44. Three Wilfley tables. From (43); deliver concentrates to (31), (35), and (46) and tailings to waste.

45. Three Wilfley tables. From (36); deliver concentrates to (31) and tailings to (34) and (37).

46. Bin. From (32), (42), and (44); delivers to (47).

47. Two Wilfley tables. From (46); deliver concentrates to (31) and tailings to waste.

Results per 24 hours:

Material.	Weight in Tons.	Percent Lead.	Percent Zinc.	Percent Iron.	Percent Silica.	Ounces per Ton. Silver.	Ounces per Ton. Gold.
Crude ore	400.0	10.0	9.0	.....	.....	7.0	.....
Galena concentrates	70.0 to 75.0	33.0	7.0	21.0	3.0	18.5	0.06
Sphalerite concentrates	40.0	2.0 to 4.0	25.0 and up	15.0	8.0	5.0	0.02
Tailings	290.0 to 285.0	0.8	3.0	.....	.....	1.5	.....

§ 1464. MILL NO. 132. CONCENTRATING MILL OF THE DALY-WEST MINING COMPANY, PARK CITY, UTAH.[64] — This mill has a capacity of 500 tons per 24 hours.[160] The mill handles both sulphide and oxide ores in a gangue of limestone and quartzite. The economic minerals are the sulphides of lead, zinc, and copper; tetrahedrite and some carbonates. Some high-grade ore is shipped directly to the smelter from the mine. It will average to run 18.4% in lead,

1.9% in copper, 9.4% in zinc, 52 ounces in silver, and 0.04 ounce in gold per ton. The milling ore averages to run 4.5% in lead, 5.2% in zinc, and 11.3 ounces in silver per ton. The problem is to recover the lead, copper, zinc, silver, and gold values. A high saving of zinc is not, at present, attempted; but another mill is planned to save the zinc values. The ore, coming in cars [184] from the shaft, is dumped onto (1).

1. Eight grizzlies, 7 feet long, with 1.5-inch spaces between the bars. From the mine; deliver oversize and undersize to separate compartments in (2).

2. Sixteen small ore bins, each 7 feet long by 20 feet wide by 22 feet deep and holding normally 100 tons. The bins, for one-half their width, are flat, and slope at an angle of 45° for the other half. They are arranged in series, holding alternately coarse and fine ore. Each has a gate operated by a rack and pinion. From (1); deliver, via belt-driven plunger feeders, alternately coarse and fine ore to (3).

3. Thirty-two inch Robins conveying and picking belt with a 5-ply belt run level and having a speed of 40 feet per minute, a capacity of 40 tons per hour, and a life of 5 or 10 years. Requires 5 horse-power. From (2), fed alternately coarse and fine ore; delivers first-class ore to (4), refuse to (5), and milling ore to (6).

4. Bin for first-class ore, 3.5 × 4 × 4 feet, with a capacity of 4 or 5 tons and a bottom sloping at 45°. From (3); delivers, via gate and mine cars, to smelter.

5. Bin for refuse with details as in (4). From (3); delivers, via gate and mine cars, to dump.

6. Grizzly, 4.5 feet long, with 1-inch spaces between the bars. From (3); delivers oversize to (7) and undersize to (8).

7. Gates No. 4 gyratory breaker, breaking 600 tons per 24 hours to pass a 1-inch ring. Manganese concaves and mantles last about 6 months. Requires 25 horse-power. From (6); delivers crushed ore to (8).

8. Eighteen-inch elevators with a 10-ply rubber belt having a speed of 320 feet per minute, a life of 5 to 7 years, and pressed steel buckets, 7 × 16 inches, set 2 feet apart, elevating 600 tons 70 feet per 24 hours, and having a life of 3 years. Requires 6 horse-power. From (6) and (7); delivers to (9).

9. Richardson automatic weighing scales with a capacity of 40 tons per hour. From (8); deliver to (10).

10. Bin for mill feed, 20 feet long by 18 feet wide by 16 feet deep, with a capacity of 150 tons, and a bottom sloping at 20°. From (9); delivers, via belt-driven plunger feeder, to (11).

11. Automatic sampler. A sample is cut out from the whole stream of ore every 15 minutes and this amounts to about 1,500 pounds of ore per 24 hours. From (10); delivers sample to assayer and rejects to (12).

12. Belted coarse-crushing rolls, 14 × 36 inches, making 110 revolutions per minute, and crushing to 0.185-inch cubes with a capacity of 600 tons per 24 hours. The Midvale steel shells are 5 inches thick and last while crushing 80,000 tons. Require 15 horse-power. Water is introduced here. From (11); deliver crushed ore to (13).

13. Cylindrical trommel, with a 3-mesh, 9-wire screen, making 20 revolutions per minute. The screens last from 1 to 3 months. From (12); delivers oversize to (14) and undersize to (18).

14. Finishing rolls, 14 × 36 inches, making 110 revolutions per minute and crushing to 0.323-inch cubes with a capacity of 600 tons of ore per 24 hours. The Midvale steel shells are 5 inches thick and last while crushing 20,000 tons of ore and the necessary returns. Require 15 horse-power. From (13) and (17); deliver crushed ore to (15).

15. Cylindrical trommel with details as in (13). From (14); delivers oversize to (16) and undersize to (18).

16. Conical trommel with a 2-mesh, 7-wire screen and other details as in (13). From (15); delivers oversize to (17) and undersize to (22).

17. Eight-inch belt elevator. From (16); delivers to (14).

18. Cylindrical trommel with a 4-mesh, 11-wire screen and other details as in (13). From (13) and (15); delivers oversize to (23) and undersize to (19).

19. Cylindrical trommel with a 6-mesh, 14-wire screen and other details as in (13). From (18); delivers oversize to (24) and undersize to (20).

20. Cylindrical trommel with an 8-mesh, 16-wire screen and other details as in (13). From (19); delivers oversize to (25) and undersize to (21).

21. Sherman settling-tank, 2 feet in diameter by 3 feet deep. From (20); delivers spigot to (26) and overflow to (36).

22. Two 2-compartment Harz jigs with sieves, 24 × 36 inches, having 4 meshes to the inch. The plungers make 125 1.5 to 2-inch strokes per minute. Each requires 4 horse-power. From (16); deliver concentrates from side discharges and hutches to (42) and tailings to (27).

23. Two 2-compartment Harz jigs with sieves, 24 × 36 inches, having 6 meshes to the inch. The plungers make 180 1-inch strokes per minute. Each requires 4 horse-power. From (18); deliver concentrates from side discharges and hutches to (42) and tailings to (27).

24. Two 2-compartment Harz jigs with sieves, 24 × 36 inches, having 4 meshes to the inch. The plungers make 225 0.75-inch strokes per minute. Each requires 4 horse-power. From (19); deliver concentrates from hutches to (42) and tailings to (43).

25. Two 2-compartment Harz jigs with sieves, 24 × 36 inches, having 4 meshes to the inch. The plungers make 275 0.5-inch strokes per minute. Each requires 4 horse-power. From (20); deliver concentrates from hutches to (42) and tailings to (43).

26. Two 2-compartment Harz jigs with sieves, 24 × 36 inches, having 6 meshes to the inch. The plungers make 325 0.375-inch strokes per minute. Each requires 4 horse-power. From (21); deliver concentrates from hutches to (42) and tailings to (31).

27. Fourteen-inch elevator with an 8-ply rubber belt having a speed of 450 feet per minute, a life of 6 months, and 6 × 14-inch buckets of No. 8 pressed steel, set 15 inches apart, elevating 600 tons of ore per 24 hours with the necessary water, 45 feet, and having a life of 6 months. Requires 6 horse-power. From (22) and (23); delivers to (28).

28. Dewatering screen with 6 meshes to the inch. From (27); delivers oversize to (29) and undersize to (30).

29. Bin, 5 × 8 × 10 feet, with a capacity of 15 tons. From (28); delivers, via plunger feeder, to (30).

30. Three Sherman re-grinders making 90 revolutions per minute and crushing from 75 to 100 tons of ore through a 4-mesh, 9-wire screen per 24 hours with a consumption of 20 horse-power each. Life of Midvale or Latrobe die rings and roller shells, about 20 days. The Sherman mill is an improved type of the Huntington. The stem to the muller rotates in an oil bath entirely protected from grit and dust. The stems extend above the yokes and are connected with turn buckles and tension springs whereby the mullers are held tight against the die ring. This causes the mullers to wear smooth and round. From (28) and (29); deliver pulp to (31).

31. Two Sherman separating and distributing tanks, 3 feet in diameter by 3 feet deep. From (26) and (30); deliver spigots to (32) and overflows to (36).

32. Six Wilfley tables making 240 1-inch throws per minute and requiring 1 horse-power each. Each handles about 25 tons per 24 hours. From (31); deliver concentrates to (42), middlings to (33), tailings to (35), and backwater to (36).

33. Three Wilfley tables with details as in (32). From (32); deliver concentrates to (42), middlings to (34), tailings and backwater to (35).

34. Two Wilfley tables with details as in (32). From (33); deliver concentrates to (42), tailings and backwater to (35).

35. Dewatering screen with 8 meshes to the inch. From (32), (33), and (34); delivers oversize to (57) and undersize to (51).

36. Five Sherman classifiers, 4, 6, 8, 10, and 12 feet in diameter respectively, and all 12 feet deep, arranged like one 5-spigot classifier. Each consists of an outside cylinder with conical bottom. Inside of this is a steel cylinder whose sectional area is just one-half that of the annular space. The inside cylinder does not extend to the bottom of the tank. The pulp is admitted to the inner cylinder and passes down through a screen and up through the annular space, overflowing to a circular launder about the tank. This discharges to a similar tank which has twice the area of the preceding one. From (21), (31), (32), (37), and (38); deliver the first three spigots to (37), the last 2 spigots to (38), and the overflow to (39).

37. Three Wilfley tables with details as in (32). From (36); deliver concentrates to (42), middlings and backwater to (36), and tailings to (43).

38. Two Wilfley slimers with details as in (41). From (36); deliver concentrates to (42), middlings to (36), and tailings to (43).

39. Long settling tank. From (36); delivers spigot to (41) and overflow to (40).

40. Storage water-tank. From (39); delivers water to mill system.

41. Two Wilfley slimers making 220 throws per minute and requiring 0.5 horse-power each. From (39); deliver concentrates to (42) and tailings to (43).

42. Mine cars. From (22), (23), (24), (25), (26), (32), (33), (34), (37), (38), and (41); deliver coarse concentrates to the smelter.

43. Tailings launder. From (24), (25), (37), (38), and (41); delivers to (44).

Tailings Plant.

44. Sherman settling-tank, 6 feet in diameter by 6 feet deep. From (43); delivers spigot to (45) and overflow to (51).

45. Fourteen-inch elevator with details as in (27). From (44); delivers to (46).

46. Dewatering screen with 8 meshes to the inch. From (45); delivers oversize to (49) and undersize to (47).

47. Sherman settling tank, $1 \times 2 \times 2.5$ feet. From (46); delivers spigot to (48) and overflow to (51).

48. One 2-compartment Harz jig with wire-cloth sieves, 24×36 inches, having 8 meshes to the inch. Requires 4 horse-power. From (47); delivers concentrates from hutches to (64) and tailings to (57).

49. Bin of 50 tons capacity. From (46); delivers to (50).

50. One 5-foot Sherman re-grinder with details as in (30), except that the screen has 8 meshes to the inch. From (49); delivers pulp to (51).

51. Six Sherman classifiers, 3, 4.5, 5.5, 7.5, 10.5, and 14 feet in diameter and all 12 feet deep, arranged like one 6-spigot classifier. Other details as in (36). From (35), (44), (47), (50), (52), (53), (55), and (61); deliver the first 3 spigots to (52), the last 3 spigots to (53), and the overflow to (54).

52. Three Overstrom tables with details as in (32). From (51); deliver concentrates to (64), middlings and backwater to (51), and tailings to (57).

53. Three Wilfley slimers with details as in (41). From (51); deliver concentrates to (64), middlings and backwater to (51), and tailings to (57).

54. Eighteen small settling tanks, 6 feet in diameter by 6 feet deep. From (51); deliver spigots to (55) and overflows to (56).

55. One Wilfley slimer with details as in (41). From (54); delivers concentrates to (64), middlings to (51), and tailings to (57).

56. Storage tank for table wash water. From (54); delivers overflow to (63).

57. Tailings launder. From (35), (48), (52), (53), and (55); delivers to (58).

58. One settling tank. From (57); delivers spigots to dump and overflow to (59).

59. One settling tank. From (58) and (62); delivers spigot to (60) and overflow to (61).

60. Dewatering screen with 80 meshes to the inch. From (59); delivers oversize to dump and undersize to (62).

61. Two settling tanks. From (59); deliver spigots to (62) and overflows to (51).

62. Four Wilfley slimers with details as in (41). From (60), (61), and (63); deliver concentrates to (64), middlings to (59), and tailings to dump.

63. One settling tank for the finest slimes. From (56); delivers spigot to (62) and overflow as wash water for the tables.

64. Mine cars. From (48), (52), (53), (55), and (62); deliver fine concentrates to the smelter.

The concentration is about 7 to 1 and the concentrates average about 30% in lead, 15% in zinc, 6 to 7% in iron, 14% in silica, and 50 ounces in silver per ton. The tailings carry about 0.2% in lead (wet), 2% in zinc, and from 2 to 3 ounces in silver per ton. The saving effected is 95% of the lead, 50% of the zinc, and from 75 to 80% of the silver.

The method of keeping samples and assays is unusual. Fire assays are made from daily samples of the ore. A weekly sample is made up by weighing out from each daily sample the proportion represented by that day in the weekly run. These weekly samples are assayed by the wet method. In like manner a monthly and yearly sample is obtained and assayed.

Labor and Wages.

This mill, when running at full capacity, operates three 8-hour shifts per day, 7 days a week. Twenty men are employed per shift. Wages are $3 per shift with the exception of repair men who get $3.50.

Power and Water.

It takes about 300 horse-power to run the plant. Steam is supplied from the mine boilers to a 500 horse-power Hamilton simple Corliss engine, 24 × 48 inches, which furnishes all the power for the mill as well as the necessary power for lighting both the mine and the mill. This amount of power will also provide for future increases such as the erection of a zinc mill which it is the intention of the company to build in the near future.

Water comes through a pipe line from lakes situated 1,000 feet above and about 3 miles south of the mill. The mill discharges no more water than is absolutely necessary to wash away the tailings. When treating ore at the rate of 400 tons per 24 hours it discharges only 40 gallons of water per minute with

the tailings, although about 350 gallons per minute are flowing through the system.

Some of the characteristic features of this mill are as follows:

1. The small amount of water used.
2. The re-treatment of the tailings before sending them to the dump.
3. The method of classification.
4. The treatment of the middlings.

§ 1465. MILL NO. 133. IVANHOE MILL OF THE MINNESOTA SILVER COMPANY, LIMITED, SANDON, BRITISH COLUMBIA. — This mill was built in 1900 at a cost of $50,000, and is situated on the Canadian Pacific Railroad about 0.25 mile from Sandon.[32] It is well arranged, well lighted, modern in its equipment, and has a capacity of about 150 tons per 24 hours. It is operated with water power through the agency of a 6-foot Pelton wheel, and the cost of milling is about 57 cents per ton. A silver-lead ore has been mined since 1893 and during the past 4 years zinc has also been removed. The problem is to separate the galena with its silver values from sphalerite, and to separate and save as much as possible of both, from the gangue which is probably slate and siderite.

The ore comes from the mine, via wire rope tramway 8,400 feet long, at a cost of 12 cents per ton, and is delivered to (1).

1. Tramway ore-bin of 200 tons capacity. From mine, via tramway; delivers to (2).
2. Grizzly with 1-inch spaces. From (1); delivers oversize to (3) and undersize to (4).
3. Breaker, 10 × 20 inches, set to break to 1 inch. From (2); delivers crushed ore to (4).
4. Robins picking belt having a conveying length of 45 feet. The ore is not washed, but should be. From (2) and (3); delivers clean galena to (34), clean sphalerite to (35), and milling ore to (5).
5. Mill ore-bins. From (4); deliver, via automatic feeder, to (6).
6. Automatic sampler. From (5); delivers sample to (7) and reject to (8).
7. Sample bin. From (6); delivers to bucking room.
8. Coarse rolls, 14 × 30 inches, set to crush to 1 inch. From (6); deliver crushed ore to (9).
9. Elevator. From (8), (12), and (13); delivers to (10).
10. One 2-section trommel, 3 × 7 feet, with 16 and 20-millimeter holes. From (9); delivers material through 16 millimeters to (15), material on 16 and through 20 millimeters to (11), and oversize from the 20-millimeter screen to (14).
11. One 3-compartment jig. From (10), fed with 20 to 16-millimeter stuff; delivers first discharge to (32), second and third discharges to (12), the 3 hutch products to (13), and the tailings, via launder, to dump.
12. Intermediate rolls, 14 × 30 inches, crushing to 0.625 inch. From (11), (14), (16), and (18); deliver crushed ore to (9).
13. High-speed fine rolls, 6 × 42 inches. From (11), (16), (18), (20), (22), (24), and (25); deliver crushed ore to (9).
14. One 1-compartment roughing jig. From (10), fed with 25.4 to 20-millimeter stuff; delivers discharge to (32), hutch and tailings products to (12).
15. One 2-section trommel, 3 × 7 feet, with 10-millimeter holes. From (10); delivers oversize to (16) and undersize to (17).
16. One 4-compartment jig. From (15), fed with 16 to 10-millimeter stuff; delivers first discharge to (32), second and fourth discharges to (12), third discharge to (33), four hutch products to (13), and tailings, via launder, to dump.
17. One 2-section trommel, 3 × 7 feet, with 6-millimeter holes. From (15); delivers oversize to (18) and undersize to (19).

18. One 4-compartment jig. From (17), fed with 10 to 6-millimeter stuff; delivers first discharge to (32), second and fourth discharges to (12), third discharge to (33), 4 hutch products to (13), and tailings, via launder, to dump.

19. One 2-section trommel, 3 × 7 feet, with 4-millimeter holes. From (17); delivers oversize to (20) and undersize to (21).

20. One 4-compartment jig. From (19), fed with 6 to 4-millimeter stuff; delivers first and second discharges and first hutch product to (32), third discharge to (33), fourth discharge and last 3 hutch products to (13), and tailings, via launder, to dump.

21. One 2-section trommel, 3 × 7 feet, with 2.5 millimeter holes. From (19); delivers oversize to (22) and undersize to (23).

22. One 4-compartment jig. From (21), fed with 4 to 2.5-millimeter stuff; delivers first discharge and hutch product to (32), second and fourth discharges and last three hutches to (13), third discharge to (33), and tailings, via launder, to dump.

23. One 2-spigot classifier. From (21); delivers first spigot to (24), second spigot to (25), and overflow to (26).

24. One 4-compartment jig. From (23); delivers first discharge and hutch product to (32), third discharge and hutch product to (33), fourth discharge and second and fourth hutch products to (13), and tailings, via launder, to dump.

25. One 4-compartment jig. From (23); delivers first hutch product to (32), second hutch and fourth discharge products to (13), last two hutch products to (33), and tailings, via launder, to dump.

26. V-shaped settler with 2 spigots. From (23); delivers each spigot to one table in (27) and the overflow to (28).

27. Two Wilfley tables. From (26); deliver concentrates to (32), middlings to (33) and tailings to (30).

28. Two V-shaped settlers with 6 spigots. Each 70 feet long. From (26); deliver each spigot to one table in (29) and overflows to (30).

29. Six Wilfley tables. From (28), (30), and (31); deliver concentrates to (32), middlings to (33), and tailings to (30).

30. Settling tank. From (27), (28), and (29); delivers slimes to last table in (29) and overflow to (31).

31. Settling tank. From (30); delivers slimes to last table in (29) and overflow, via launder, to waste.

32. Lead-concentrates bins. From (11), (14), (16), (18), (20), (22), (24), (25), (27), and (29); deliver, via railroad cars, to smelter.

33. Zinc-concentrates bins. From (16), (18), (20), (22), (24), (25), (27), and (29); deliver, via railroad cars, to smelter.

34. Clean coarse-galena bin. From (4); delivers, via railroad cars, to smelter.

35. Clean coarse-sphalerite bin. From (4); delivers, via railroad cars, to smelter.

§ 1466. MILL NO. 134. MONITOR MILL OF THE MONITOR & AJAX FRACTION, LIMITED. ROSEBERRY, BRITISH COLUMBIA. — This mill is situated on the Canadian Pacific Railroad at Brockman, near Roseberry, on the shore of Slocan Lake.[33] It was built in 1905 on a level site, is well constructed, and can handle about 100 tons per 24 hours. Treats galena-sphalerite ores from the Monitor mine at Three Forks, about 8 miles distant, and other concentrating ores which are bought by the company.

The problem is to separate silver-bearing galena from the sphalerite and to separate and save as much as possible of both from the gangue which is probably slate and siderite.

All the ores come from the mines in railroad cars and are delivered, via shovel and chute, to (1).

1. Hadfield all-steel Blake breaker. From cars; delivers crushed ore, without washing, to (2).

2. Picking belt. From (1); delivers clean galena to (42), clean sphalerite to (43), and the remainder to (3).

3. Gates breaker. From (2); delivers crushed ore to (4).

4. Elevator. From (3); delivers to (5).

5. Snyder sampler. From (4); delivers sample to (6) and reject to (8).

6. Sample grinder. From (5); delivers directly and constantly to (7).

7. Jones sampler. From (6); delivers sample to assayer and reject to (8).

8. Mill ore-bin. From (5) and (7); delivers to (9).

9. Hadfield coarse rolls, 14 × 24 inches. From (8); deliver crushed ore to (10). Operated by 2 driving pulleys, 8 × 36 inches, with a flange next to the roll. Belts and pulleys are too small for coarse crushing and incapable of transmitting the power necessary to crush rough ore to the full capacity of such rolls, and such small wheels cannot, of course, contain the momentum that is required when coarse ore or uncrushed material enters the rolls.

10. Elevator. From (9) and (13); delivers to (11).

11. Trommel with 12-millimeter holes. From (10); delivers oversize to (12) and undersize to (14).

12. One 4-compartment jig. From (11); delivers 4 hutch products and the first and fourth discharges to (13), second and third discharges to (44), and tailings to dump.

13. Hadfield fine rolls, 14 × 24 inches. From (12), (15), (17), (21), (23), and (25); deliver crushed middlings to (10). Details like (9). Capacity too small and there should be at least two other sets for the same purpose.

14. Trommel with 8-millimeter holes. From (11); delivers oversize to (15) and undersize to (16).

15. One 4-compartment jig. From (14), fed with 12 to 8-millimeter stuff; delivers first and second discharges to (44), third and fourth discharges and 4 hutch products to (13), and tailings to tailings dump.

16. Trommel with 3-millimeter holes. From (14); delivers oversize to (17) and undersize to (18).

17. One 4-compartment jig. From (16), fed with 8 to 4-millimeter stuff; delivers first and second discharges and first hutch product to (44); third and fourth discharges and second, third, and fourth hutch products to (13); and tailings to tailings dump.

18. Trommel with 2-millimeter holes. From (16); delivers oversize to (19) and undersize to (20).

19. One 4-compartment jig. From (18), fed with 4 to 2-millimeter stuff; delivers first discharge and the first and second hutch products to (44), third discharge and the third and fourth hutch products to (45).

20. Culver classifier. From (18); delivers spigot to (21) and overflow to (22).

21. One 4-compartment jig. From (20); delivers the first and second discharges and hutch products to (44) and the fourth discharge to (13).

22. Culver classifier. From (20); delivers spigot to (23) and overflow to (24).

23. One 4-compartment jig. From (22); delivers the first and second hutch products to (44) and the fourth discharge to (13).

24. Culver classifier. From (22); delivers spigot to (25) and overflow to (26).

25. One 4-compartment jig. From (24); delivers the first hutch product

to (44), the second and fourth hutch products to (13), and the third hutch product to (45).

26. V-shaped settling tank, 60 feet long by 2 feet wide at the smaller end and 10 feet wide at the larger end, making sixteen products. From (24); delivers to (27), (28), (29), (30), and (31).

27. Four Lührig-type tables. From (26); deliver lead concentrates to (40), middlings to (32), and tailings to tailings dump.

28. Two Lührig-type tables. From (26); deliver lead concentrates to (40), middlings to (33), and tailings to tailings dump.

29. Two Lührig-type tables. From (26); deliver lead concentrates to (40), middlings to (34), and tailings to tailings dump.

30. One Lührig-type table. From (26); delivers lead concentrates to (40) and tailings product to (35).

31. One Lührig-type table. From (26); delivers tailings product to (35).

32. Two Lührig-type tables. From (27); deliver leady-zinc concentrates to (35) and zinc concentrates to (41).

33. One Lührig-type table. From (28); delivers leady-zinc concentrates to (35), zinc concentrates to (41), and tailings to tailings dump.

34. One Lührig-type table. From (29); delivers zinc product to (41) and tailings to tailings dump.

35. Elevator. From (30), (31), (32), (33), (37), and (39); delivers to (36).

36. Settler with 4 spigots. From (35); delivers first spigot to (37), second and third spigots to (38), fourth spigot to (39), and overflow to waste.

37. One Lührig-type table. From (36); delivers lead concentrates to (40), leady-zinc concentrates to (35), zinc concentrates to (41), and tailings to tailings dump.

38. Two Lührig-type tables. From (36); deliver lead concentrates to (40) and tailings to tailings dump.

39. One Lührig-type table. From (36); delivers lead concentrates to (40), leady-zinc concentrates to (35), zinc concentrates to (41), and tailings to tailings dump.

40. Elevator. From (27), (28), (29), (30), (37), (38), and (39); delivers to (44).

41. Elevator. From (32), (33), (34), (37), and (39); delivers to (46).

42. Clean-galena bin. From (2); delivers, via cars, to smelter.

43. Clean-sphalerite bin. From (2); delivers, via cars, to smelter.

44. Lead concentrator. From (12), (15), (17), (19), (21), (23), (25), and (40); delivers lead concentrates, via cars, to smelter.

45. Zinc concentrator. From (19) and (25); delivers zinc concentrates, via cars, to smelter.

46. Zinc concentrator. From (41), delivers zinc concentrates, via cars, to smelter.

In connection with the mill there is a well-arranged assay office; but the automatic samples made by the Snyder sampler in the mill, and the cutting down of the same, cannot be relied upon as correct, for the methods used in getting them are faulty.

The Lührig tables are new in this country and may cause a big problem for this mill to solve. They have neither spring, bump, nor any sort of percussion.

Power and Water.

The concentrating machinery is operated by a 5-foot Pelton wheel located on the screen floor, and the discharge furnishes the wash water for the jigs and vanners.

A 2-foot Pelton wheel is located on the lower vanner floor to operate a dynamo for lighting purposes, and also to furnish the magnet-exciting current for a magnetic separating plant which the company proposes to erect in the near future.

§ 1467. MILL NO. 135. THE MAGNETIC SEPARATION PLANT OF THE CENTRAL MINE, BROKEN HILL, NEW SOUTH WALES, AUSTRALIA. — This plant is handling the tailings from the old wet mill of the Central mine.[143] The tailings contain approximately 7 ounces of silver per ton, 5% of lead as galena, and 19% of zinc, the latter as sphalerite. During 1907, the plant treated 88,000 tons of tailings, producing 23,000 tons of concentrates which assayed about 10 ounces of silver per ton, 8% lead, and 39% zinc. The gangue is largely rhodonite with quartz and a little rhodochrosite.

Ore from the dump is shoveled to (1).

1. A horizontal belt conveyor. From the dump; delivers to (2). This conveyor is laid along the toe of the dump from which tailings are to be taken, and is so constructed as to be free to turn about a pivot at the delivery end of the conveyor framework. Thus the whole frame, carrying the 200 feet of conveyor, is free to traverse a complete circle in azimuth, but for the obstruction offered by the dump. A hopper is mounted on the conveyor frame and can be placed at any required position along the conveyor. The tailings are shoveled directly into the hopper. When about 5 feet of the dump has been removed along the whole length of the conveyor, the framework is moved in towards the dump, turning about the delivery end as before mentioned. When in the required position, shoveling is resumed, or, if necessary, the feed may be maintained while the position of the belt is gradually altered.
2. Fixed inclined conveying belt. From (1); delivers to (3).
3. Feed hopper. From (2); delivers to (4).
4. Revolving cylindrical drier, 35 feet long, 4 feet in diameter, and set at an angle of 6.5°. From (3); delivers hot ore to (5) and moisture and gases, via stack, to atmosphere. The drier is provided with longitudinal internal ribs which elevate the ore and drop the same repeatedly through the heated air as the ore gravitates towards the lower end of the cylinder. At the upper end of the drier, where the ore enters, is the stack that carries off the furnace gases, laden with moisture evaporated from the ore. At the lower end of the drier is a furnace discharging its hot gases, through a short wrought-iron box, into the drier cylinder. It will be noted that the heated air and furnace gases traverse the drier in an opposite direction to the ore. Two or 3% of water is eliminated from the ore.
5. Push conveyor. From (4); delivers to (6).
6. Elevator. From (5) and (8); delivers to (7).
7. Three cylindrical trommels with wire-cloth screens having 2.5-millimeter openings. From (6); deliver oversize to (8), undersize to (9), and dust to (28).
8. Thirty-inch Cornish rolls. From (7); deliver crushed ore to (6).
9. Elevator. From (7); delivers to (10).
10. Four wind separators. From (9); deliver dust to (28), very fine material — approximately from 0.08 millimeter to dust — to (12), and coarser material to (11).
11. Eight cylindrical trommels with wire cloth screens having 0.75-millimeter openings. From (10); deliver oversize to (15) and undersize to (14).
12. Dust separator. From (10); delivers fine ore to (13) and dust to (28).
13. Belt conveyor. From (12); delivers to (16).
14. Belt conveyor. From (11); delivers to (17).
15. Belt conveyor. From (11); delivers to (18).
16. Fines storage bin. From (13); delivers to (19).

17. Medium-ore storage bin. From (14); delivers to (21).

18. Coarse-ore storage bin. From (15); delivers to (23).

19. Four Mechernich magnetic separators. From (16); deliver highly magnetic rhodonite to (26), slightly magnetic sphalerite to (25), and tailings to (20).

20. Two Mechernich magnetic separators. From (19); deliver highly magnetic rhodonite to (26), slightly magnetic sphalerite to (25), and tailings to (27).

21. Eight Mechernich magnetic separators. From (17); deliver highly magnetic rhodonite to (26), slightly magnetic sphalerite to (25), and tailings to (22).

22. Four Mechernich magnetic separators. From (21); deliver highly magnetic rhodonite to (26), slightly magnetic sphalerite to (25), and tailings to (27).

23. Five Mechernich magnetic separators. From (18); deliver highly magnetic rhodonite to (26), slightly magnetic sphalerite to (25), and tailings to (24).

24. Three Mechernich magnetic separators. From (23); deliver highly magnetic rhodonite to (26), slightly magnetic sphalerite to (25), and tailings to (27).

25. Belt conveyor. From (19), (20), (21), (22), (23), and (24); delivers to (38).

26. Belt conveyor. From (19), (20), (21), (22), (23), and (24); delivers, via hopper and tramway, to waste dump.

27. Belt conveyor. From (19), (20), (21), (22), (23), and (24); delivers, via feed hopper, to (35).

28. One 6-foot dust exhaust fan. From (7), (10), and (12); delivers to (29).

29. Dust settler consisting of a wooden tower with suitable baffle plates. The dust current rises through a constant shower of water. From (28) and water from (32); delivers dust slime to (34) and water to (30).

30. Settling tank. From (29) and (33); delivers water to (31) and settlings, periodically, to (34).

31. Sump. From (30); delivers, via a 4-inch centrifugal pump, to (32).

32. Water tank. From (31); delivers to (29) and overflow water to (33).

33. Water-storage tank. From (32); delivers to (30).

34. Elevator. From (29), (30), (36), and (37); delivers to (35).

35. Two hydraulic classifiers. From (27) and (34); deliver spigots to (36) and overflows to (37).

36. Two 5-compartment jigs. From (35); deliver first hutches of galena to (40), second and third hutches of sphalerite to (41), the fourth hutches to (34), and the fifth hutches and overflows to waste.

37. Wilfley table. From (35); delivers galena concentrates to (40), sphalerite concentrates to (41), middlings to (34), and tailings to dump.

38. Elevator. From (25); delivers to (39).

39. Shipping bins for dry sphalerite concentrates. From (38); deliver, via cars, to smelter.

40. Shipping bin for galena concentrates. From (36) and (37); delivers, via cars, to smelter.

41. Shipping bins for wet sphalerite. From (36) and (37); deliver, via cars, to smelter.

The concentrates represent 37% of the total weight treated.

The magnetic separators are of the latest design Mechernich type, (see § 1322) with motor armature revolving horizontally between the poles of a strong mag-

net. The pole distance is easily adjusted. Controlling rheostats in field and armature circuits admit of a large variation in intensity of field or speed of armature to suit the nature of the ore under treatment. The construction of the armature differs slightly in the different groups of machines. The success of the magnetic separation depends largely upon good sizing and regular feed. To secure the latter each feed hopper receives an intermittent motion by means of a pulsatory dynamo supplying current to electro-magnets. The resulting vibrating motion imparted to the hopper causes a very regular thin stream of ore to pass beneath the armatures of the separators.

All machinery in this plant is driven by various electric motors receiving current from the central power station.

§ 1468. MILL NO. 136. MILL OF THE FRISCO MINING COMPANY, LIMITED, GEM, IDAHO.[3] — The plant has a capacity of 400 tons per 24 hours.[24] The ore consists of galena and sphalerite disseminated throughout a quartzite gangue. The ore also contains some magnetite which is associated, more or less intimately, with the galena, rendering certain portions of the latter magnetic. The mill is designed to make both galena and sphalerite concentrates which, with the magnetite, are the economic minerals.

Ore from the mine goes to (1).

1. Grizzly, 28 × 60 inches, with 1.5-inch spaces between the bars and a slope of 18.5°. From the mine; delivers oversize to (2) and undersize to (3).

2. Two Blake breakers, one having a 10 × 20-inch and the other a 9 × 15-inch jaw opening and each making 250 thrusts per minute. Cast-iron jaw plates used. From (1); deliver crushed ore to (4).

3. Twenty-inch elevator with a belt having a speed of approximately 300 feet per minute and malleable-iron buckets, 7 × 12 inches, set 20 inches apart. From (1); delivers to (5).

4. Twenty-inch elevator with details as in (3). From (2); delivers to (5).

5. Twenty-inch picking belt having a speed of 50 feet per minute. From (3) and (4); delivers hand-picked high-grade ore to 5 different pockets (Nos. 1, 2, and 3 for lead ore and Nos. 4 and 5 for zinc ore), from which it goes, via railroad cars, to smelter, and milling ore to (6).

6. Two Vezin automatic samplers, the first delivering 10% of the total ore to the second which, in turn, cuts out 10% and delivers 1% of the ore from (5) to be quartered by hand, the sample going to the assayer and all rejects to (7).

7. Wooden ore-bin, 8 × 11 × 22 feet, having a capacity of 125 tons. From (6); delivers to (8).

8. Fraser and Chalmers rolls, 16 × 30 inches, making 60 revolutions per minute. Use cast-iron shells. From (7); deliver crushed ore to (9).

9. Four Dings magnetic separators run wet with 18-inch feed belts. From (8); deliver magnetic product to (10) and non-magnetic product to (13).

10. Six 3-compartment jigs with plungers making 175 strokes per minute. From (9) and (13); deliver galena concentrates to bin and thence to smelter, middlings to (11), and tailings to dump.

11. Twenty-inch elevator with details as in (3). From (10); delivers to (12).

12. E. P. Allis rolls, 14 × 36 inches, making 72 revolutions per minute. Use cast-iron shells. From (11); deliver crushed ore to (13).

13. Two trommels, 3 × 9 feet, divided into 3 screening sections each 3 feet long, having slopes of 1.25 inches to the foot, and making 13 revolutions per minute. The first and second sections have 10-millimeter and the third sections have 15-millimeter round punched holes. From (9) and (12); deliver 10 to 0-millimeter stuff to (14), 15 to 10-millimeter stuff and larger than 15-millimeter stuff to (10).

14. Two trommels, 3 × 9 feet, divided into three screening sections each 3 feet long, having slopes of 1.25 inches to the foot and making 13 revolutions per minute. The first sections have 3.5-millimeter, the second sections have 5-millimeter, and the third sections have 7-millimeter round punched holes. From (13) and (17); deliver 3.5 to 0-millimeter stuff to (18); 5 to 3.5-millimeter, 7 to 5-millimeter, and larger than 7-millimeter stuff to (15).

15. Twelve 4-compartment jigs with plungers making 225 strokes per minute. From (14) and (18); deliver galena concentrates, from the first 2 compartments, running about 42% in lead and from 8 to 10% in zinc, to a bin and thence to smelter; lead-iron-zinc middlings, from the third compartments, via elevators, to a bin where they drain and are then sent to (40); middlings, from the fourth compartments, to (16); and tailings to waste.

16. Twenty-inch elevator with details as in (3). From (15); delivers to (17).

17. One set of Fraser and Chalmers and two sets of E. P. Allis rolls, 14 × 24 inches, making 60 revolutions per minute. Use rolled-steel shells. From (16); deliver crushed ore to (14).

18. Two trommels, 3 × 3 feet, having slopes of 1.25 inches to the foot, speeds of 13 revolutions per minute, and 2.5-millimeter round punched holes. From (14); deliver oversize to (15) and undersize to (19).

19. Twenty-inch elevator with details as in (3). From (18); delivers to (20).

20. Double Callow traveling-belt screen with 18-mesh, 27-brass wire-cloth screens. From (19); delivers oversize to (24) and undersize to (21).

21. Double Callow traveling-belt screen with 22-mesh, 27-brass wire-cloth screens. From (20); delivers oversize to 24 and undersize to (22).

22. Double Callow traveling-belt screen with 30-mesh, 30-brass wire-cloth screens. From (21); delivers oversize to (24) and undersize to (23).

23. Twenty-inch elevator with details as in (3). From (22) and (24); delivers to (25).

24. Ten 4-compartment jigs with plunger making 300 strokes per minute. From (20), (21), and (22); deliver galena concentrates, from the first 2 compartments, running about 42% in lead and from 8 to 10% in zinc, to a bin and thence to smelter; lead-iron-zinc middlings, from the third compartments, via elevator, to a bin where they drain and are then sent to (40); middlings, from the fourth compartments, to (23); and tailings to waste.

25. Settling tank. From (23); delivers settled sands to (26) and overflow to (33).

26. Three 5-foot Huntington mills making 68 revolutions per minute and crushing through slotted screens having 30 holes to the inch. From (25); deliver pulp to (27).

27. Double Callow traveling-belt screen with 40-mesh, 32-brass wire-cloth screens. From (26); delivers oversize to (30) and undersize to (28).

28. Double Callow traveling-belt screen with 60-mesh, 36-brass wire-cloth screens. From (27); delivers oversize to (31) and undersize to (29).

29. Double Callow traveling-belt screen with 80-mesh, 38-brass wire-cloth screens. From (28); delivers oversize to (32) and undersize to (34).

30. Three No. 5 Wilfley tables making 260 1.25-inch throws per minute. From (27); deliver galena concentrates to a bin and thence to smelter, zinc concentrates to a bin and thence to smelter, middlings to (36), and tailings to waste.

31. Three No. 5 Wilfley tables making 260 1-inch throws per minute. From (28); deliver galena concentrates to a bin and thence to smelter, zinc concentrates to a bin and thence to smelter, middlings to (36), and tailings to waste.

32. Four No. 5 Wilfley tables making 260 0.75-inch throws per minute. From (29); deliver galena concentrates to a bin and thence to smelter, zinc concentrates to a bin and thence to smelter, middlings to (36), and tailings to waste.

33. Three conical steel settling-tanks, 8 feet in diameter and 8 feet deep at the centers while but 3 feet deep at the rims. From (25); deliver spigots to (35) and overflows to waste.

34. Four conical steel settling-tanks with details as in (33). From (29) and (33); deliver spigots to (35) and overflows to waste.

35. Five Allis-Chalmers 6-foot vanners making 180 throws per minute. From (34); deliver lead concentrates to a bin and thence to smelter and tailings to (38).

36. One conical steel settling-tank with details as in (33). From (30), (31), and (32); delivers spigot to (37) and overflow to waste.

37. Five Allis-Chalmers 6-foot vanners making 190 throws per minute. From (36); deliver zinc concentrates to a bin and thence to smelter and tailings to (38).

38. One conical steel settling-tank with details as in (33). From (35) and (37); delivers spigot to (39) and overflow to waste.

39. Five Allis-Chalmers 6-foot vanners making 200 throws per minute. From (38); deliver zinc concentrates to a bin and thence to smelter and tailings to waste.

40. Three Dings magnetic separators treating wet ore. From (15) and (24) via feed hoppers; deliver the magnetic or low-grade lead-iron product, running about 25% in lead, 12% in zinc, and 20% in iron, to a bin and thence to smelter; and the non-magnetic or zinc concentrates, running about 43% in zinc and from 5 to 7% in lead, to a bin and thence to smelter.

It will be noticed that after passing the roughing rolls, (8), the ore passes through 4 Dings magnetic separators, (9). These take out a certain percentage of the lead which is rendered magnetic by its association with more or less iron. There is also a portion of the quartzite gangue which contains some magnetite and this is also picked up by the magnets with the magnetic lead. This mixed product from (9) goes directly to a jig without sizing, where the magnetic quartzite is sloughed off and the galena is concentrated to a product assaying about 40% lead. The portion of the galena which is non-magnetic, together with the sphalerite and rest of the gangue, is sized and then jigged.

The mill operates 3 shifts per 24 hours and 7 days a week. There are employed on 8-hour shifts, 3 breaker-feeder men, 3 roll men, 6 jig men, 3 table men, 3 vanner men, 3 separator men, 1 repair man, 3 ore-loading men, and 3 shift bosses.

§ 1469. MILL NO. 137. CALAMINE MILL, MONTEPONI, SARDINIA. — This mill handles about 240 tons in 11 hours and the ores treated consist of the economic minerals calamine, smithsonite, and limonite, with some galena, cerrusite, siderite, and sphalerite.[80] The gangue is limestone and dolomite with some barite. The smithsonite and galena are very compact, and upon breaking remain largely in the coarse products while the calamine and cerrusite are very friable and break up into fines. The galena carries about 0.2% of silver but the cerrusite contains very little silver.[8]

Ore from the mine cars is dumped to (1).

1. Grizzly having 80-millimeter openings between the bars. From the mine; delivers oversize, via hopper, to (2) and undersize, via hopper, to (3).

2. Picking table. From (1); delivers calamine to market, mixed zinc-iron-lead ore to (12), limonite to market, and waste rock to dump.

3. Two Ferraris waving screens each having three screening sections with

holes 14, 20, and 30 millimeters in diameter respectively. From (1); deliver material on 30 millmeters to (7), material between 30 and 20 millimeters to (6), material between 20 and 14 millimeters to (6), and material between 14 and 0 millimeters to (4).

4. Two Ferraris waving screens each having three screening sections with holes 5, 8, and 10 millimeters in diameter respectively. From (3); deliver material on 10 millimeters to (6), material between 10 and 8 millimeters to (8), material between 8 and 5 millimeters to (8), and material between 5 and 0 millimeters to (5).

5. Two Ferraris waving screens each having two screening sections with holes 1.5 and 3 millimeters in diameter respectively. From (4); deliver material on 3 millimeters to (8), material between 3 and 1.5 millimeters to (8), and material through 1.5 millimeters to (9).

6. Twelve 2-compartment jigs. From (3) and (4); deliver mixed lead and zinc ore to (12), calamine to market, and tailings to dump.

7. Wire picking-belt. From (3); delivers rich calamine to market, ferruginous calamine to market, poor zinc-iron middlings to (12), limonite to market, and waste rock to dump.

8. Sixteen 5-compartment jigs. From (4) and (5); deliver lead-zinc middlings to (12), rich calamine to market, ferruginous calamine to (32), limonite to market, poor iron-zinc middlings to storage, and tailings to waste.

9. Hydraulic classifier. From (5); delivers spigots to (10) and overflow to (11).

10. Four 5-compartment jigs. From (9) and (10); deliver cerrusite to market, lead middlings to (10), calamine to market, rich iron-zinc middlings to (26), poor iron-zinc middlings to storage, and tailings to waste.

11. Six Ferraris waving tables. From (9); deliver cerrusite to market, calamine to market, iron-zinc middlings to (26), and tailings to waste.

Re-crushing Department.

12. Ferraris wet ball mill. From (2), (6), (7), and (8); delivers to (13). Crushes through 8 millimeters.

13. Ferraris waving screen having three screening sections with holes 1.5, 3, and 5 millimeters in diameter respectively. From (12); delivers material on 5 millimeters to (14), material between 5 and 3 millimeters to (14), material between 3 and 1.5 millimeters to (14), and material through 1.5 millimeters to (16).

14. Three 5-compartment jigs. From (13); deliver middlings to (15), calamine to market, ferruginous calamine to (32), rich iron-zinc middlings to (19), poor iron-zinc middlings to storage, and tailings to waste.

15. Four-compartment jig. From (14); delivers lead ore to market, lead-barite middlings to (35), calamine to market, iron-zinc middlings to (26), and tailings to waste.

16. Hydraulic classifier. From (13); delivers spigots to (17) and overflow to (18).

17. Five-compartment jig. From (16) and (17); delivers cerrusite to market, lead-zinc middlings to (17), calamine to market, ferruginous calamine to (32), iron-zinc middlings to (26), and tailings to waste.

18. Two Ferraris waving tables. From (16); deliver cerrusite to market, calamine to market, iron-zinc middlings to (26), and tailings to waste.

Auxiliary Middlings Department.

19. Ferraris waving screen having two screening sections with holes 5 and 8 millimeters in diameter respectively. From (14); deliver material on 8 milli-

meters to (20), material between 8 and 5 millimeters to (20), and material through 5 millimeters to (22).

20. Four 5-compartment jigs. From (19) and (22); deliver lead middlings to (21), rich calamine to market, ferruginous calamine to (32), iron-zinc middlings to (26), poor middlings to storage, and tailings to waste.

21. Four intermediate jigs run intermittently and discharged by hand-skimming. From (20); deliver cerrusite to market, lead-barite middlings to (35), calamine to market, poor iron-zinc middlings to (26), and tailings to waste.

22. Ferraris waving screen having two screening sections with holes 1.5 and 3 millimeters in diameter respectively. From (19); delivers material on 3 millimeters to (20), material between 3 and 1.5 millimeters to (20), and material through 1.5 millimeters to (23).

23. Hydraulic classifiers. From (22); deliver spigots to (24) and overflow to (25).

24. Two 5-compartment jigs. From (23) and (24); deliver cerrusite to market, zinc-lead middlings to (24), calamine to market, rich iron-zinc middlings to (26), poor iron-zinc middlings to storage, and tailings to waste.

25. Three Ferraris waving tables. From (23); deliver cerrusite to market, calamine to market, iron-zinc middlings to (26), and tailings to waste.

Magnetic Separation Department.

26. Revolving cylindrical furnace. From (10), (11), (15), (17), (18), (20), (21), (24), and (25); delivers to (27).

27. Ferraris waving screen having six screening sections with holes, 0.5, 1, 1.5, 2.5, 4.5, and 6 millimeters in diameter respectively. From (26); delivers each size periodically to (28).

28. Ferraris magnetic separator. From (27); delivers limonite to market, non-magnetic tailings coarser than 2 millimeters to (29), and finer than 2 millimeters to (31).

29. Three intermediate jigs run intermittently and discharged by hand skimming. From (28); deliver limonite to market, calamine to market, middlings to (30), and tailings to waste.

30. Intermediate jig, run intermittently and discharged by hand skimming. From (29); delivers calamine to market, middlings to storage, and tailings to waste.

31. Three 4-compartment jigs. From (28) and (31); deliver limonite to market, middlings to (31), rich calamine to market, ferruginous calamine to (32), and tailings to waste.

32. Revolving cylindrical furnace. From (8), (14), (17), (20), and (31); delivers to (33).

33. Ferraris waving screen having seven screening sections with holes 0.5, 1, 1.5, 2.5, 4.5, 6, and 10 millimeters in diameter respectively. From (32); delivers each size periodically to (34).

34. Ferraris magnetic separator. From (33); delivers calamine to market and limonite to market.

35. Revolving furnace for decrepitating barite. From (15) and (21); delivers to (36).

36. Ferraris waving screen having six screening sections with holes 0.5, 1, 1.5, 2.5, 4.5, and 6 millimeters in diameter respectively. From (35); deliver material on 6 millimeters to market, material between 4.5 and 6 millimeters to (38), material between 4.5 and 1 millimeter to market, material between 1 and 0.5 millimeter to (37), and material below 0.5 millimeter to market.

37. Three 4-compartment jigs. From (36) and (37); deliver lead ore to

market, mixed lead ore to (37), barite to market, calamine to market, and tailings to waste.

38. Intermediate jig run intermittently and discharged by hand skimming. From (36) and (38); delivers lead ore to market, lead-zinc middlings to (38), calamine to market, and tailings to waste.

§ 1470. MILL NO. 138. VELARDEÑA MINING AND SMELTING COMPANY, VELARDEÑA, DURANGO, MEXICO. — This mill has a capacity of about 175 tons per 24 hours.[152] The ore treated is a very heavy sulphide consisting of galena, sphalerite, and pyrite, all very finely interspersed. The gangue is a hard porphyry containing a small amount of limestone. The minerals compose nearly 90% of the ore which carries about 11 ounces of silver per ton. The problem is to save the lead, zinc, iron, and silver values. All tonnages referred to in this flow sheet are metric. The ore from shaft No. 6 goes via 1.5-ton tram cars; from shaft No. 7, via 20-ton railroad cars; and from shaft No. 8, via 30-ton railroad cars, to (1).

Crushing and Sampling Plant.

1. Two sets of weighing scales of 100 tons capacity. One used for mine cars and one for railroad cars. From the mine; deliver to (2).

2. Wooden breaker-bin of 2,000 tons capacity with a flat bottom and a side gate discharge. From (1); delivers to (3).

3. Blake breaker with a 10 × 20-inch jaw opening, making 240 thrusts per minute, and requiring 8.7 horse-power when breaking 220 tons per 24 hours to 1.25 inches. From (2); delivers crushed ore to (4).

4. Sixteen-inch elevator with an 8-ply rubber belt, having a speed of 348 feet per minute, and 67 malleable-iron buckets, 6 × 6 × 15 inches, which elevate the ore 52.75 feet. When handling at the rate of 400 tons per 24 hours, it requires 1.5 horse-power. From (3) and (6); delivers to (5).

5. Trommel, 50 × 96 inches, with 1.25-inch round holes punched in steel plate, making 9 revolutions per minute, having a slope of 2 inches to the foot, and requiring 1 horse-power when handling 400 tons per 24 hours. From (4); delivers oversize to (6) and undersize to (7).

6. Blake breaker with a 10 × 20-inch jaw opening, making 240 thrusts per minute, and requiring 19.8 horse-power when breaking to 1-inch cubes. From (5); delivers crushed ore to (4).

7. Vezin sampler, 4.75 feet in diameter, making 20 revolutions per minute, and cutting out 5% of the ore. From (5); delivers sample to (8) and reject to (12).

8. Rolls, 10 × 20 inches, making 130 revolutions per minute, and requiring 3.9 horse-power when crushing to 4 mesh. Manganese-steel shells are used. From (7); deliver crushed sample to (9).

9. Elevator having a speed of 341 feet per minute, and 59 malleable-iron buckets, 5.5 × 5.5 × 11.5 inches, which elevate the sample 45.5 feet. From (8); delivers to (10).

10. Vezin sampler, 2.33 feet in diameter, making 20 revolutions per minute, and cutting out 12.5% of the feed, or 12.5 pounds per ton of original ore. From (9); delivers sample to (11) and reject to (12).

11. Gates No. 2 sample grinder. From (10); delivers finished sample to bucking-room.

12. Robins belt conveyor with a magnet suspended above it to remove scrap iron and steel. Seven amperes at 125 volts are used in the coils which are an old set of generator field coils. Periodically the magnet is swung off the belt, the switch opened, and the accumulated iron and steel dropped into a box for the purpose. From (7) and (10); delivers ore, via tripper, to (13), and scrap iron and steel to waste.

13. Wooden roll-bin with a capacity of 300 tons and a bottom having a 45° slope. The product of this bin will average about 10.0% in lead, 25.0% in iron, 10.0% in zinc, 29.0% in sulphur, 3.0% in lime, 10.0% in silica, and 11.0 ounces in silver per ton. From (12); delivers, via side gate and plunger feeder, to (14).

Concentrating Plant.

This department is divided into two sections. Section "A" is described below, but in section "B" the scheme for rolls, trommels, classifier, jigs, and tables is duplicated.

14. Coarse rolls, 14 × 36 inches, making 70 revolutions per minute, and requiring 12 horse-power when crushing 100 tons per 24 hours to 3 mesh. Chrome-steel shells are used. From (13); deliver crushed ore to (15).

15. Sixteen-inch elevator with an 8-ply rubber belt, having a speed of 332 feet per minute, and 84 malleable-iron buckets, 6 × 6 × 20 inches, which elevate the ore 66.25 feet. Requires 2.3 horse-power. From (14), and (17); delivers to (16).

16. Two trommels, 3 × 8 feet, with 2-millimeter round holes punched in steel plate, making 16 revolutions per minute under water, having slopes of 1.375 inches to the foot, and handling 50 tons each per 24 hours. From (15) with 30 gallons of water per minute from (37); deliver oversize to (17) and undersize together with 30 gallons of water per minute to (18).

17. Two fine rolls, 14 × 30 inches, making 98 revolutions per minute, and requiring 11.5 horse-power when crushing with rolls set close. Chrome-steel shells are used. From (16); deliver crushed ore to (15).

18. Two trommels, 3 × 8 feet, with diagonally slotted holes, 1.25 millimeters in diameter, punched in steel plates. Make 16 revolutions per minute, have slopes of 1.375 inches to the foot, and handle 50 tons each per 24 hours. From (16) with 10 gallons of spray water and 10 gallons of wash water per minute from (37); deliver oversize together with 10 gallons of water per minute to (23) and undersize with 40 gallons of water per minute to (19).

19. Two trommels, 3 × 8 feet, with steel wire-cloth screens having 0.75-millimeter openings. Make 16 revolutions per minute and have slopes of 1.375 inches to the foot. From (18) with 10 gallons of spray water and 10 gallons of wash water per minute from (37); deliver oversize together with 10 gallons of water per minute to (24) and undersize with 50 gallons of water per minute to (20).

20. Richards' vortex hydraulic classifier with three 4-inch sorting columns. From (19) with 22 gallons of hydraulic water per minute for the first spigot, 10 gallons for the second spigot, and 5 gallons for the third spigot from (38); delivers the first spigot together with 15 gallons of water per minute to (25), second spigot with 7 gallons of water per minute to (26), third spigot with 5 gallons of water per minute to (27), and overflow with 60 gallons of water per minute to (21).

21. V-shaped settling tank, 44 feet long by 7 feet deep, with 3 spigots and no rising current. Serves both sections. From (20); delivers the first spigot together with 6 gallons of water per minute to (28), the second spigot with 6 gallons of water per minute to (29), the third spigot with 12 gallons of water per minute to (30), and the overflow with 84 gallons of water per minute to (22).

22. Cylindrical redwood clarifying-tank with a peripheral overflow, 16 feet high by 12 feet in diameter. Serves both sections. From (21), (35), and the mine pump; delivers slimes to waste and 154 gallons of clear water per minute to (23). (24), (25), (26), (27), (28), (29), (31), and (32).

23. Two coarse 3-compartment Harz jigs with brass wire-cloth sieves,

18 × 32 inches, having 2-millimeter openings. The plungers, 18 × 32 inches, make 225 0.5-inch strokes per minute. Each handles 10 tons per 24 hours and requires 3 horse-power. From (18) with 10 gallons of hydraulic water per minute from (22); deliver the first hutch products, as concentrates, together with 2 gallons of water per minute, to (33); the second hutch products, as concentrates, with 2 gallons of water per minute, to (33); the third hutch products, as concentrates, with 2 gallons of water per minute, to (33); and the tailings with 14 gallons of water per minute to (36).

24. Three intermediate 3-compartment Harz jigs with brass wire-cloth sieves, 18 × 22 inches. The plungers, 18 × 32 inches, make 240 0.375-inch strokes per minute. Each handles 8 tons per 24 hours and requires 3 horse-power. From (19) with 18 gallons of hydraulic water per minute from (22); deliver the first hutch products, as concentrates, together with 3.34 gallons of water per minute, to (33); the second hutch products, as concentrates, with 3.33 gallons of water per minute, to (33); the third hutch products, as concentrates, with 3.33 gallons of water per minute, to (33); and the tailings with 18 gallons of water per minute to (36).

25. Three fine 3-compartment Harz jigs with brass wire-cloth sieves, 18 × 32 inches, having 1.7-millimeter openings. The plungers, 18 × 32 inches, make 250 0.3125-inch strokes per minute. Each handles 9 tons per 24 hours and requires 3 horse-power. From (20) with 21 gallons of hydraulic water per minute from (22); deliver the first hutch products, as concentrates, together with 7 gallons of water per minute, to (33); the second hutch products, as concentrates, with 7 gallons of water per minute, to (33); the third hutch products, as concentrates, with 7 gallons of water per minute, to (33); and the tailings with 15 gallons of water per minute to (36).

26. One No. 5 Wilfley table making 245 0.75-inch throws per minute, handling 7 tons per 24 hours, and requiring 0.2 horse-power. From (20) with 5 gallons of wash water per minute from (22); delivers concentrates together with 1.75 gallons of water per minute to (33), middlings with 1.25 gallons of water per minute to (31), tailings with 6 gallons of water per minute to (36), and backwater with 3 gallons of water per minute to (30).

27. One No. 5 Wilfley table with details as in (26). From (20) with 5 gallons of wash water per minute from (22); delivers concentrates together with 1.75 gallons of water per minute to (33), middlings with 1.25 gallons of water per minute to (31), tailings with 6 gallons of water per minute to (36), and backwater with 3 gallons of water per minute to (30).

28. One No. 5 Wilfley table with details as in (26). From (21) with 6 gallons of wash water per minute from (22); delivers concentrates together with 1.75 gallons of water per minute to (33), middlings with 1.25 gallons of water per minute to (32), tailings with 6 gallons of water per minute to (36), and backwater with 3 gallons of water per minute to (30).

29. One No. 5 Wilfley table with details as in (26). From (21) with 6 gallons of wash water per minute from (22), delivers concentrates together with 1.75 gallons of water per minute to (33), middlings with 1.25 gallons of water per minute to (32), tailings with 6 gallons of water per minute to (36), and backwater with 3 gallons of water per minute to (30).

30. Cylindrical redwood clarifying-tank with a peripheral overflow, a capacity of 44,750 gallons, 20 feet high by 20 feet in diameter. Serves both sections. From (21), (26), (27), (28), (29), and (33); delivers sludge together with 23 gallons of water per minute to (34) and overflow with 100 gallons of water per minute to (35).

31. One No. 5 Wilfley table with details as in (26). Serves both sections. From (26) and (27) with 4 gallons of wash water per minute from (22); delivers

concentrates together with 0.5 gallon of water per minute to (33), and tailings with 8.5 gallons of water per minute to (36).

32. One No. 5 Wilfley table with details as in (26). Serves both sections. From (28) and (29) with 4 gallons of wash water per minute from (22); delivers concentrates together with 0.5 gallon of water per minute to (33) and tailings with 8.5 gallons of water per minute to (36).

33. Two accumulators and dewaterers used alternately and serving both sections. Each holds a little over 1 ton and is a steel body, 3 feet long by 2 feet high by 2 feet wide, inside dimensions, supported on trunnions with an overflow spout at the front side and bottom. Concentrates are run into the dewaterer until the body is nearly full, the water overflowing. The flow of the concentrates is then diverted to the other dewaterer. The first accumulator is drained, the catch released, and the body allowed to revolve and empty itself. From (23), (24), (25), (26), (27), (28), (29), (31), and (32); deliver concentrates together with 2 gallons of water per minute to (39) and overflow with 87 gallons of water per minute to (30).

34. Five cylindrical concrete settling-tanks which serve both sections and overflow at the top, 3 feet high by 24 feet in diameter. From (30); deliver slimes together with 3 gallons of water per minute to waste and overflows with 20 gallons of water per minute to (35).

35. One 8-inch single-stage Worthington centrifugal pump handling 1,500 gallons per minute against a head of 140 feet. Serves both sections. Direct connected to a General Electric, form K, 75 horse-power, 75-ampere, 550-volt, 25-cycle induction motor making 1,500 revolutions per minute. From (30), (34), and (36); delivers to (22), (37), or (38).

36. Tailings pond. From (23), (24), (25), (26), (27), (28), (29), (31), and (32); delivers 59 gallons of water per minute to (35), 100 gallons of water per minute to waste, and tailings to (41).

37. Cylindrical cypress head-tank, 14 feet high by 12 feet in diameter. Serves both sections. From (35) and the mine pump; delivers 70 gallons of water per minute to (16), (18), and (19).

38. Classifier water tank. Serves both sections. From (35) and the mine pump; delivers 37 gallons of water per minute to (20).

39. Belt conveyor. From (33); delivers concentrates to (40).

40. Shipping bins. From (39); deliver concentrates, via cars, to smelter.

The jig concentrates average to run approximately 27.0% in lead, 28.0% in iron, 4.0% in zinc, 2.0% in silica, and 23.5 ounces in silver per ton.

The table lead-concentrates assay about as follows: 30.0% in lead, 23.0% in iron, 7.0% in zinc, 2.0% in silica, and 25.6 ounces in silver per ton.

The total recovery of silver and lead in both the wet and dry plants is approximately 75.0%.

Labor and Wages.

This concentrator operates two 12-hour shifts for 7 days a week. There are employed on each shift 2 Americans at 8 Pesos per shift and about 12 Mexicans, of whom the roll, jig, and table men receive about 2 Pesos and the peons 1.25 Pesos per shift.

Power and Water.

The crushing plant is driven by a 75 horse-power, 3-phase, 25-cycle, 550-volt induction motor. The concentrator is driven by a 125 horse-power non-condensing E. P. Allis Corliss engine at 89 revolutions per minute. The electrical energy is developed at a central station comprising four 500 horse-power Crossley gas-engine units operated on the Loomis-Pettibone producer gas system, and two 500 horse-power compound condensing Nordberg engines direct connected.

Current is supplied to the adjacent motors at 550 volts but is transformed up to 11,000 volts for transmission to the mines. The total power used for section "A" is 52.5 horse-power, for sections "A" and "B" 92.8 horse-power, and for the whole mill including the crushing plant 112.0 horse-power. In the crushing plant, however, the maximum power required at times rises to twice the average power required.

The water from the Santa Maria mine is delivered directly to the mill tanks by a 4-stage, 5-inch Worthington centrifugal pump, delivering 500 gallons of water per minute against a 500-foot head, direct connected to a 150 horse-power, form K, induction motor, and also by a Worthington duplex steam pump and Cameron Nos. 9 and 11 sinkers.

Three hundred and sixty-eight gallons of water per minute are required or 11.4 tons per ton of ore. Of this amount 263 gallons per minute are saved and re-used, or 8.1 tons per ton of ore and 105 gallons per minute are lost in the concentrates, tailings, and by evaporation, which has to be made up from the mine water.

Zinc Plant.

41. Tailings stack. From (36); delivers to (42).

42. Conveyor. From (41); delivers to (43).

43. Revolving drier made of steel 5 feet in diameter by 30 feet long, having a slope of 0.5 inch to the foot, and making 15 revolutions per minute. Has no lining. Supported on rollers at four places and fired with gas in the front end. Regulated by dampers and drafts. From (42); delivers dry ore to (45) and dust to (44).

44. Dust chamber of brick. From (43); delivers dust to (45).

45. Belt conveyor. From (43) and (44); delivers to (46).

46. Elevator. From (45) and (48); delivers to (47).

47. Gravity screen built somewhat after the Rowand type, being 20 feet long, 2 feet wide, and 2.33 feet high, inside dimensions. It has two screens, one having 1.25 and the other 0.75-millimeter straight punched-slot holes. Each screen is 18 × 24 inches and made of steel. Three-inch angle irons are used to break the fall from one tray to the next, there being 7 trays for the first or finest size and 5 for the second or intermediate size. From (46); delivers material larger than 1.25 millimeters to (48), material between 1.25 and 0.75 millimeter to (49), and material smaller than 0.75 millimeter to (58).

48. Rolls, 14 × 30 inches. From (47); deliver crushed ore to (46).

49. Wooden hopper with a flat bottom and a capacity of 75 tons. From (47); delivers, via spout, to (50).

50. International magnetic separator with toothed armature, making from 80 to 90 revolutions per minute, and using 8 amperes at 125 volts, direct current generated by the motor generator set at the central power plant. From (49); delivers magnetic product to (57) and non-magnetic product to (51).

51. International magnetic separator with details as in (50). From (50); delivers magnetic product to (57) and non-magnetic product to (52).

52. Elevator. From (51); delivers to (53).

53. Wooden hopper with a flat bottom and a capacity of 50 tons. From (52); delivers, via spout, to (54).

54. International magnetic separator with details as in (50). From (53); delivers magnetic product to (57) and non-magnetic product to (55).

55. International magnetic separator with details as in (50). From (54); delivers magnetic product to (57) and non-magnetic product to (56).

56. Wooden tailings-hopper with a flat bottom and a capacity of 100 tons. From (55) and (64); delivers, periodically, via spout, to (66).

57. Wooden coarse-zinc concentrates-hopper with a flat bottom and a capacity of 50 tons. From (50), (51), (54), and (55); delivers, periodically, via spout, to (66).

58. Wooden hopper with a flat bottom and a capacity of 75 tons. From (47); delivers, via spout, to (59).

59. International magnetic separator with details as in (50). From (58); delivers magnetic product to (65) and non-magnetic product to (60).

60. International magnetic separator with details as in (50). From (59); delivers magnetic product to (65) and non-magnetic product to (61).

61. Elevator. From (60); delivers to (62).

62. Wooden hopper with a flat bottom and a capacity of 50 tons. From (61); delivers, via spout, to (63).

63. International magnetic separator with details as in (50). From (62); delivers magnetic product to (65) and non-magnetic product to (64).

64. International magnetic separator with details as in (50). From (63); delivers magnetic product to (65) and non-magnetic product to (56).

65. Wooden fine-zinc concentrates-hopper with a flat bottom and a capacity of 50 tons. From (59), (60), (63), and (64); delivers, periodically, via spout, to (66).

66. Conveyor. From (56), (57) or (65); delivers to (67).

67. Elevator. From (66); delivers to (68).

68. Wooden hopper with a flat bottom and a capacity of 25 tons. From (67); delivers, via spout, to (69).

69. Roasting furnace, which is a brick stack about 4 feet square at the top, 6 feet square at the bottom, inside measurements, and 41.67 feet high. The sides are 17.5 inches thick. The ore is admitted at the top, through a hopper, and falls over a splitting and dividing system which scatters it. Ascending the stack, while the ore is descending, are the hot gases produced by the combustion of producer gas which is burned in a small fire chamber in the front of the stack. The furnace is a complete success as operated at this plant and the stack temperature is controlled very closely by varying the quantity of gas and the proportion of ore. The distribution of the ore through the furnace is nearly perfect and the rate of feed absolutely under control. As a rule the furnace is operated under a rate of feed of 75 tons per 24 hours with a maximum of 140 tons per 24 hours. The fines drawn over through the downcomer can largely be collected in the dust chamber. The sulphur is reduced by roasting, on the coarse size, from 24.6% to 22.2% and on the finer size from 28.2% to 21.2%. The gas required to roast 100 tons of the wet-mill tailings is 433,440 cubic feet of a calorific value of 61 British thermal units. From (68); delivers roasted ore to (71) and dust, via downcomer, to (70).

70. Dust chamber. From (69); delivers to (71).

71. Chain elevator. From (69) and (70); delivers to (72).

72. Distributor. From (71); delivers, periodically, to (73), (74), or (75).

73. Wooden cooling-hoppers with flat bottoms, for tailings. From (72); deliver, periodically, via spouts, to (76).

74. Wooden cooling-hoppers with flat bottoms, for coarse zinc-concentrates. From (72); deliver, periodically, via spouts, to (76).

75. Wooden cooling-hoppers with flat bottoms, for fine zinc-concentrates. From (72); deliver, periodically, via spouts, to (76).

76. Conveyor. From (73), (74), or (75); delivers to (77).

77. Elevator. From (76); delivers, periodically, to (78), (80), or (83).

78. Wooden tailings-hopper with a flat bottom. From (77); delivers, via spout, to (79).

79. International magnetic separator with smooth armature making 115

revolutions per minute and using 2 amperes at 125 volts, direct current generated by the motor generator set at the central power plant. From (78); delivers the magnetic product to (86) and the non-magnetic product to (92).

80. Wooden coarse zinc-concentrates hopper with a flat bottom. From (77); delivers, via spout, to (81).

81. International magnetic separator with details as in (79). From (80); delivers magnetic product to (86) and non-magnetic product to (82).

82. International magnetic separator with details as in (79). From (81); delivers magnetic product to (92) and the non-magnetic product to (88).

83. Wooden fine zinc-concentrates hopper with a flat bottom. From (77); delivers, via spout, to (84).

84. International magnetic separator with details as in (79). From (83); delivers magnetic product to (86) and non-magnetic product to (85).

85. International magnetic separator with details as in (79). From (84); delivers magnetic product to (92) and non-magnetic product to (88).

86. Elevator. From (79), (81), and (84); delivers to (87).

87. Wooden iron-concentrates shipping hopper with a flat bottom. These concentrates will run about 9.0% in lead, 35.0% in iron, 8.0% in zinc, 40.0% in sulphur, 3.0% in silica, and 8.0 ounces in silver per ton. From (86); delivers, via spout and cars, to smelter.

88. Elevator. From (82) and (85); delivers to (89).

89. Wooden zinc-concentrates shipping hopper with a flat bottom. From (88); delivers, via spout, to (90).

90. Vezin sampler making 20 revolutions per minute and cutting out 5.0% of the feed. From (89); delivers sample to bucking-room and reject to (91).

91. Richardson automatic scales of 60 tons capacity. From (90); deliver, via cars, to smelter.

92. Elevator. From (79), (82), and (85); delivers to (93).

93. Wooden tailings-hopper with a flat bottom. From (92); delivers, via spout and cars, to waste.

The following statement is made, by the management of this property, concerning the International magnetic separator:

"It is a simple, medium-priced high-capacity machine. It maintains its adjustment, produces uniform results and is cheap to install and to operate. It has not the high tensity of the machines of the Wetherill type nor can it be as delicately adjusted." (See § 1320.)

I. MILLS SAVING GOLD, SILVER, LEAD, AND ZINC VALUES.

Mills 139, 140, 141, and 142 are given to illustrate this class in three districts.

§ 1471. MILL NO. 139. CONCENTRATOR OF THE MINAS TECOLOTES Y ANEXAS, OF THE AMERICAN SMELTERS SECURITIES COMPANY, SANTA BARBARA, CHIHUAHUA, MEXICO. — The capacity of the crushing department is 800 tons, and of the concentrating department 600 tons per 24 hours.[152] All tonnages referred to in this flow sheet are metric tons.

The ore treated consists of the economic minerals galena, sphalerite, and pyrite disseminated in a gangue of quartz. All these minerals, including the quartz, are argentiferous. The crude ore assays about as follows: 8.0% in lead, 8.0% in zinc, 10 ounces in silver, and from 0.03 to 0.07 ounce in gold per ton. The problem is to concentrate and recover the economic values. Ore from the mine is dumped to (1).

Crushing Plant.

1. Two receiving bins each having a capacity of 200 tons. From the mine; deliver to (2).

2. One No. 5 gyratory McCully breaker breaking to 2.5 inches. The driving pulley makes 400 revolutions per minute and the average power required, when breaking at the rate of 600 tons per 24 hours, is about 13 horse-power. A manganese-steel head lasted 170 days or while breaking 69,700 tons, and a chilled-iron head lasted 160 days or while breaking 29,300 tons. A set of manganese-steel concaves lasted 345 days or while breaking 106,200 tons. Babbitt for the eccentric lasted 107 days or while breaking 42,425 tons. Phosphor-bronze eccentric wearing rings last 160 days or while breaking 29,300 tons, and cast-iron safety pins last 170 days or while breaking 69,700 tons. From (1); delivers crushed ore to (3).

3. Thirty-inch 6-ply conveying and picking belt with a conveying length of 48.5 feet, a speed of 100 feet per minute, and requiring about 1 horse-power when handling ore at the rate of 600 tons per 24 hours. From (2); delivers waste rock to dump, high-grade ore, via cars, to smelter, and milling ore to (4).

4. Trommel, 3.5 by 10 feet, having 1.5-inch round holes punched in steel plate, a speed of 18 revolutions per minute, a slope of 1.75 inches to the foot, lasting 130 days or while screening 59,200 tons, and requiring 1.5 horse-power when handling at the rate of 660 tons per 24 hours. From (3); delivers oversize to (5) and undersize to (6).

5. Two Farrel Blake breakers, with 6 × 20-inch jaw openings, making 305 thrusts per minute, breaking to 1.25 inches, having a capacity of 480 tons per 24 hours, and requiring about 9 horse-power. Fixed and swinging jaw plates of manganese steel lasted 135 days or while breaking 56,600 tons while the same jaw plates of Canda steel lasted 19 days or while breaking 10,400 tons. Babbitt for the pitman lasts 90 days or while breaking 47,500 tons. Cast-iron toggle bearings last 180 days or while breaking 96,000 tons. Steel cheek plates last 135 days or while breaking 56,600 tons, and steel tension rods last 130 days or while breaking 57,920 tons. From (4); deliver crushed ore to (6).

6. Twenty-inch elevator with a 10-ply rubber belt, having a speed of 310 feet per minute, a life of 330 days, or while handling 98,700 tons, and buckets, 8 × 18 inches, set 18 inches apart, which elevate the ore 47 feet and have a life similar to that of the belt. The upper pulley is 36 and the lower 30 inches in diameter. Handles 600 tons per 24 hours. From (4) and (5); delivers to (7).

7. Storage bin of 100 tons capacity. From (6); delivers to (8).

8. Plunger feeder making 90 1.5-inch strokes per minute. From (7); delivers to (9).

9. Twenty-inch elevator with a 10-ply rubber belt having a speed of 310 feet per minute, a life of 540 days, or while handling 220,000 tons, and buckets, 8 × 18 inches, set 20 inches apart, which elevate the ore 51 feet and have a life similar to that of the belt. The upper pulley is 36 and the lower 30 inches in diameter. Handles 1,050 tons per 24 hours. From (8) and (11); delivers to (10).

10. Two trommels, 4 × 6 feet, having 0.875-inch round holes punched in steel plate, speeds of 17 revolutions per minute, and slopes of 1.75 inches to the foot. Each lasts 143 days or while screening 64,000 tons and requires 1 horse-power when handling at the rate of 660 tons per 24 hours. From (9); deliver oversize to (11) and undersize to (12).

11. Colorado Iron Works improved standard rolls, 16 × 40 inches, making 100 revolutions per minute, crushing 450 tons per 24 hours to 0.75 inch, and requiring about 29 horse-power. Latrobe steel shells and cast-iron check plates last 112 days or while crushing 47,900 tons. Babbitt for the bearings lasts 180 days or while crushing 76,500 tons. From (10); deliver crushed ore to (9).

12. Two trommels, 4 × 8 feet, having 8-millimeter round holes punched in steel plate, speeds of 17 revolutions per minute, and slopes of 1.75 inches to

the foot. Each lasts 28 days or while screening 15,100 tons and requires 1 horse-power when handling at the rate of 660 tons per 24 hours. From (10) and (14); deliver oversize to (13) and undersize to (15).

13. Allis-Chalmers Reliance style "A" rolls, 14 × 36 inches, making 100 revolutions per minute, crushing 450 tons per 24 hours to 5 millimeters, and requiring about 22 horse-power. Midvale steel shells and cast-steel cheek plates last 137 days or while crushing 61,590 tons. Bronze bushings and cast-iron followers last 360 days or while crushing 180,000 tons. From (12); deliver crushed ore to (14).

14. Sixteen-inch elevator with an 8-ply rubber belt having a speed of 310 feet per minute, a life of 540 days, or while handling 220,000 tons, and buckets, 7 × 14 inches, set 20 inches apart, which elevate the ore 46 feet and have a life similar to that of the belt. The upper pulley is 36 and the lower pulley 30 inches in diameter. Handles 450 tons per 24 hours. From (13); delivers to (12).

15. Vezin sampler, 4 feet in diameter, making 20 revolutions per minute, and cutting out 5% of the ore. Requires about 0.4 horse-power. From (12); delivers sample to (16) and reject to (17).

16. Vezin sampler, 3 feet in diameter, making 20 revolutions per minute, and cutting out 5% of the ore fed, or 5 pounds per ton of ore milled. Requires about 0.4 horse-power. From (15); delivers sample to assayer and reject to (17).

17. Fourteen-inch 6-ply Robins belt conveyor with a conveying length of 200 feet, a speed of 300 feet per minute, elevating the ore 20 feet, and requiring about 5 horse-power when handling ore at the rate of 600 tons per 24 hours. From (15) and (16); delivers to (18).

Concentrator which is in two sections. Only one section is described.

18. Mill storage bin of 340 tons capacity. The mill feed has about the following screen analysis:

Screen Size.	Percent Weight.
Through 8 and on 4 millimeters	29.9
" 4 " " 2.5 "	17.1
" 2.5 " " 10 mesh, 19 wire	7.5
" 10 mesh, 19 wire	45.5
Total	100.0

From (17); delivers to (19).

19. Two plunger feeders making 68 1.5-inch strokes per minute. From (18); deliver to (20).

20. Twelve-inch elevator with an 8-ply rubber belt having a speed of 344 feet per minute, a life of 720 days, or while handling 330,000 tons, and buckets, 6 × 10 inches, set 20 inches apart which elevate the ore 60 feet and have a life similar to that of the belt. The upper pulley is 36 and the lower pulley 30 inches in diameter. Handles 300 tons per 24 hours. From (19); delivers to (21).

21. Two trommels, 4 × 6 feet, having 4-millimeter round holes punched in steel plate, speeds of 18 revolutions per minute, and slopes of 1.5 inches to the foot. Each lasts 103 days or while screening 46,500 tons and requires 1 horse-power when handling at the rate of 600 tons per 24 hours. From (20); deliver oversize to (22) and undersize to (27).

22. Two double 1-compartment Harz jigs with 5-inch beds, 8-mesh, 18-brass wire sieves, 19.5 × 36 inches, and plungers making 160 1.5-inch strokes

per minute. From (21), 37 gallons of water per minute from (93), 8 gallons from (91), and 4 gallons from (90); deliver side discharge and hutch products, as first-class concentrates, together with 4 gallons of water per minute, to (82), and tailings with 45 gallons of water per minute to (23).

23. Silver Lake inclined dewatering screen. From (22); delivers drained tailings to (24), 33 gallons of water per minute to (50), and 12 gallons to (43).

24. Feed hopper having a capacity of 5 tons. From (23); delivers to (25) and leakage to (50).

25. Plunger feeder making 1-inch strokes. From (24); delivers to (26).

26. Allis-Chalmers Reliance style "A" rolls, 14 × 36 inches, making 80 revolutions per minute, run wet, crushing 175 tons per 24 hours to 0.125 inch, and requiring about 17 horse-power. Midvale and cast-steel shells last 77 days or while crushing 40,300 tons. Bronze bushings and cast-iron followers last 360 days or while crushing 180,000 tons. From (25); deliver crushed ore to (34).

27. Two trommels, 4 × 6 feet, having 2.5-millimeter round holes punched in steel plate, speeds of 18 revolutions per minute, slopes of 1.5 inches to the foot, lasting 89 days or while screening 37,650 tons, and requiring 1 horse-power when handling at the rate of 400 tons per 24 hours. Run dry. From (21); deliver oversize to (28) and undersize to (30).

28. One double 1-compartment Harz jig with a 4-inch bed, 5-mesh, 17-brass wire sieve, 19.5 × 36 inches, and a plunger making 205 0.75-inch strokes per minute. From (27), 28 gallons of water per minute from (90) and 15 gallons from (91); delivers hutch product, as first-class concentrates, together with 8 gallons of water per minute, to (82), and tailings with 35 gallons of water per minute to (29).

29. Feed hopper having a capacity of 5 tons. From (28); delivers to (36) and leakage to (50).

30. Two trommels, 4 × 6 feet, having steel wire-cloth screens of 10 mesh, 19 wire, speeds of 18 revolutions per minute and slopes of 1.5 inches to the foot. Each lasts 139 days or while screening 63,300 tons and requires 1 horse-power when handling at the rate of 300 tons per 24 hours. From (27), 36 gallons of spray water per minute, and 18 gallons to carry the feed, from (91); deliver oversize to (31) and undersize with 54 gallons of water per minute to (32).

31. One double 2-compartment Harz jig with sieves, 19.5 × 36 inches. The first sieves are of 10-mesh, 22-brass wire cloth and the second of punched steel plate with 2-millimeter round holes. The plungers make 220 0.5625-inch strokes per minute. From (30), 15 gallons of water in the feed per minute from (91) and 22 gallons of fresh water from (90); delivers both hutch products as first-class concentrates, together with 8 gallons of water per minute to (82) and tailings with 29 gallons of water per minute to (42).

32. Richards' vortex classifier with one 18-inch compartment and one 4-inch sorting column. From (30) and 12 gallons of hydraulic water per minute from (94); delivers spigot together with 8 gallons of water per minute to (33) and overflow with 58 gallons of water per minute to (47).

33. One double 3-compartment Harz jig with sieves, 19.5 × 36 inches. The first and second sieves are of 10-mesh, 22-brass wire cloth and the third of punched steel plate with 2-millimeter round holes. The plungers make 285 strokes per minute. The length of the strokes in the first and third compartments is 0.375 inch and in the second 0.3125 inch. From (32) and 45 gallons of fresh water per minute from (90); delivers the first hutch products together with 3 gallons of water per minute, as first-class concentrates, to (82); the second hutch products with 5 gallons of water per minute, as second-class concentrates

to (82); the third hutch products with 7 gallons of water per minute, as second-class concentrates, to (62); and the tailings with 38 gallons of water per minute to (61).

34. Two 14-inch elevators with 8-ply rubber belts having speeds of 343 feet per minute. Each has a life of 260 days, or while handling 62,250 tons, and buckets, 6 × 12 inches, set 18 inches apart, which elevate the ore 65 feet and have a life similar to that of the belt. The upper pulleys are 36 and the lower 30 inches in diameter. Each handles 120 tons per 24 hours. From (26) and (36), 12 gallons of water per minute from (90) to carry the feed from (26), and 6 gallons of fresh water from (93); deliver with 73 gallons of water per minute to (35).

35. Two trommels, 4 × 6 feet, having 2.5-millimeter round holes punched in steel plate, speeds of 18 revolutions per minute, and slopes of 1.5 inches to the foot. Each lasts 139 days or while screening 62,600 tons and requires 1 horse-power when handling at the rate of 300 tons per 24 hours. From (34) and 31 gallons of spray water from (91); deliver oversize to (36) and undersize with 104 gallons of water per minute to (37).

36. Two Allis-Chalmers Reliance style "A" rolls, 14 × 30 inches, making 100 revolutions per minute, crushing 300 tons per 24 hours when set close, and requiring 22 horse-power. Midvale steel shells last 95 days or while crushing 45,400 tons. Cast-iron cheek plates last 91 days or while crushing 43,300 tons. Bronze bushings and cast-iron followers last 360 days or while crushing 180,000 tons. From (29) and (35), 20 gallons of water per minute from (91) to carry the feed from (35); deliver crushed ore with 55 gallons of water per minute to (34).

37. Two trommels, 4 × 6 feet, with details as in (30). Each lasts 143 days or while screening 63,850 tons and requires 1 horse-power when handling at the rate of 250 tons per 24 hours. From (35) and 54 gallons of spray water per minute from (91); deliver oversize together with 40 gallons of water per minute to (38), and undersize with 118 gallons of water per minute to (40).

38. One 3-inch Richards' vortex classifier. From (37) with 23 gallons of hydraulic water per minute from (94); delivers spigot together with 12 gallons of water per minute to (39) and overflow with 51 gallons of water per minute to (40).

39. One double 2-compartment Harz jig with sieves, 19.5 × 36 inches. The first sieves are of 10-mesh, 22-brass wire cloth and the second of punched steel plate with 2-millimeter round holes. The plungers make 220 0.5625-inch strokes per minute. From (38) with 22 gallons of fresh water per minute from (90); delivers both hutch products, as first-class concentrates, together with 8 gallons of water per minute to (82) and tailings with 26 gallons of water per minute to (42).

40. Richards' vortex classifier with one 24-inch compartment and one 4-inch sorting column. From (37) and (38) with 12 gallons of hydraulic water per minute from (94); delivers spigot together with 8 gallons of water per minute to (41) and overflow with 83 gallons of water per minute to (47), and with 90 gallons of water per minute to (49).

41. One double 3-compartment Harz jig with sieves, 19.5 × 36 inches. The first two sieves are of 10-mesh, 22-brass wire cloth and the third of punched steel plate with 2-millimeter round holes. The plungers make 285 strokes per minute. The length of the strokes in the first and third compartments is 0.375 inch and in the second compartments 0.5625 inch. From (40) with 45 gallons of fresh water per minute from (90); delivers the first hutch products together with 3 gallons of water per minute, as first-class concentrates, to (82); the second hutch products with 5 gallons of water per minute, as second-class

concentrates, to (62); the third hutch products with 7 gallons of water per minute, as second-class concentrates, to (52); and the tailings with 38 gallons of water per minute to (51).

42. One 5-ton feed tank with a spigot. From (31) and (39) with 42 gallons of hydraulic water per minute, and 10 gallons per minute in the feed, from (90); delivers spigot together with 36 gallons of water per minute to (43) and overflow with 71 gallons of water per minute to (50).

43. Two 5-foot Huntington mills making 72 revolutions per minute. Each crushes 30 tons per 24 hours through a 12-mesh No. 1 needle slotted-steel screen and requires about 11 horse-power. Latrobe steel dies last 285 days or while crushing 73,917 tons. Latrobe steel roller shells last 143 days or while crushing 64,750 tons. Steel screens last 57 days or while crushing 21,660 tons. From (42) with 12 gallons of water per minute from (23); deliver pulp with 48 gallons of water per minute to (44).

44. One 16-inch elevator with an 8-ply rubber belt having a speed of 375 feet per minute, a life of 240 days, or while handling 140,000 tons, and buckets, 7 × 14 inches, set 18 inches apart, which elevate the ore 33 feet and have a life similar to that of the belt. The upper pulley is 36 and the lower 30 inches in diameter. Handles 60 tons per 24 hours. From (43) with 4 gallons of fresh water per minute from (91); delivers to (45).

45. Richards' vortex classifier with one 24-inch compartment and one 4-inch sorting column. From (44) with 12 gallons of hydraulic water per minute from (94); delivers spigot together with 12 gallons of water per minute to (46) and the overflow with 52 gallons of water per minute to (47).

46. One double 3-compartment Harz jig with sieves, 19.5 × 36 inches. The first and second sieves are of 10-mesh, 22-brass wire cloth and the third are of punched-steel plate with 2-millimeter round holes. The plungers make 285 strokes per minute. The length of the strokes in the first and third compartments is 0.375 inch and in the second compartments 0.5625 inch. From (45) with 45 gallons of fresh water per minute from (90); delivers the first hutch products together with 4 gallons of water per minute, as first-class concentrates, to (82); the second hutch products with 6 gallons of water per minute, as second-class concentrates, to (62); the third hutch products with 8 gallons of water per minute, as second-class concentrates, to (55); and the tailings with 39 gallons of water per minute to (51).

47. One 4-foot Spitzkasten. From (32), (40), and (45); delivers spigot together with 50 gallons of water per minute to (48) and overflow with 143 gallons of water per minute to (65).

48. One Richards' 2-spigot classifier. From (47) with 12 gallons of hydraulic water per minute from (94); delivers the first spigot together with 12 gallons of water per minute to (59), the second spigot with 10 gallons of water per minute to (58), and the overflow with 40 gallons of water per minute to (64).

49. One Richards' 3-inch vortex classifier. From (40) with 10 gallons of hydraulic water per minute from (94); delivers spigot together with 10 gallons of water per minute to (54) and overflow with 90 gallons of water per minute to (64).

50. One 4-foot sand trap. From (23), (24), (29), and (42); delivers spigot to (51) and overflow to (66).

51. One 14-inch elevator with an 8-ply rubber belt having a speed of 340 feet per minute, a life of 325 days, or while handling 92,000 tons, and buckets, 6 × 12 inches, set 16 inches apart, which elevate the ore 29 feet and have a life similar to that of the belt. The upper pulley is 36 and the lower 30 inches in diameter. Handles 60 tons per 24 hours. From (41), (46), and (50) with 4 gallons of fresh water per minute from (91); delivers 81 gallons of water per minute to (76).

52. One No. 5 Wilfley table making 243 1-inch throws per minute. From (41) with 12 gallons of wash water per minute from (90); delivers lead concentrates together with 2 gallons of water per minute to (83), middlings with 3 gallons of water per minute to (56), tailings with 8 gallons of water per minute to (53), and backwater with 6 gallons of water per minute to (77).

53. One No. 4 Wilfley table with details as in (52). From (52) with 6 gallons of wash water per minute from (67); delivers copper concentrates together with 2 gallons of water per minute to (84), zinc middlings with 4 gallons of water per minute to (85), and tailings with 8 gallons of water per minute to (63).

54. One No. 5 Wilfley table with details as in (52). From (49) with 12 gallons of wash water per minute from (90); delivers lead concentrates together with 2 gallons of water per minute to (83), middlings with 3 gallons of water per minute to (60), tailings with 10 gallons of water per minute to (63), and backwater with 7 gallons of water per minute to (77).

55. One No. 5 Wilfley table with details as in (52). From (46) with 12 gallons of wash water per minute from (90); delivers lead concentrates together with 2 gallons of water per minute to (83), middlings with 4 gallons of water per minute to (56), tailings with 8 gallons of water per minute to (57), and backwater with 6 gallons of water per minute to (77).

56. One No. 5 Wilfley table with details as in (52). From (52) and (55) with 6 gallons of wash water per minute from (67); delivers copper concentrates together with 2 gallons of water per minute to (84), zinc middlings with 5 gallons of water per minute to (85), and backwater with 6 gallons of water per minute to (77).

57. One No. 4 Wilfley table with details as in (52). From (55) with 6 gallons of wash water per minute from (67); delivers copper concentrates together with 2 gallons of water per minute to (84), zinc middlings with 3 gallons of water per minute to (85), tailings with 8 gallons of water per minute to (63), and backwater with 1 gallon of water per minute to (77).

58. One No. 5 Wilfley table with details as in (52). From (48) with 12 gallons of wash water per minute from (90); delivers lead concentrates together with 2 gallons of water per minute to (83), middlings with 4 gallons of water per minute to (60), tailings with 9 gallons of water per minute to (63), and backwater with 7 gallons of water per minute to (77).

59. One No. 5 Wilfley table with details as in (52). From (48) with 12 gallons of wash water per minute from (90); delivers lead concentrates together with 2 gallons of water per minute to (83), middlings with 4 gallons of water per minute to (60), tailings with 8 gallons of water per minute to (63), and backwater with 10 gallons of water per minute to (77).

60. One No. 5 Wilfley table with details as in (52). From (54), (58), and (59), with 6 gallons of wash water per minute from (67); delivers lead concentrates together with 2 gallons of water per minute to (83), zinc middlings with 4 gallons of water per minute to (85), tailings with 5 gallons of water per minute to (63), and backwater with 6 gallons of water per minute to (77).

61. One No. 5 Wilfley table with details as in (52). From (33) with 6 gallons of wash water per minute from (67); delivers copper concentrates together with 2 gallons of water per minute to (84), zinc middlings with 3 gallons of water per minute to (85), tailings with 10 gallons of water per minute to (63), and backwater with 29 gallons of water per minute to (77).

62. One No. 5 Wilfley table with details as in (52). From (33), (41), and (46), with 6 gallons of wash water per minute from (67); delivers lead concentrates together with 3 gallons of water per minute to (83), copper concentrates with 2 gallons of water per minute to (84), zinc middlings with 3 gallons of

water per minute to (85), and backwater with 16 gallons of water per minute to (77).

63. Two 16-inch elevators with 8-ply rubber belts having speeds of 360 feet per minute. Each has a life of 360 days, or while handling 115,000 tons, and buckets, 7 × 14 inches, set 18 inches apart, which elevate the ore 43 feet and have a life similar to that of the belt. The upper pulleys are 36 and the lower 30 inches in diameter. Each handles about 75 tons per 24 hours and requires about 3 horse-power. From (53), (54), (57), (58), (59), (60), (61), and (71), with 10 gallons of fresh water per minute from (89); deliver 74 gallons of water per minute to (76).

64. One conical slime thickener with a capacity of 1,700 gallons. From (48) and (49); delivers spigot together with 7 gallons of water per minute to (68) and overflow with 123 gallons of water per minute to (77).

65. One slime-thickening tank with a capacity of 5,000 gallons. From (47); delivers spigot together with 18 gallons of water per minute to (68) and two overflows with 125 gallons of water per minute to (67).

66. One wooden settling tank with a capacity of 1,500 gallons. From (50); delivers spigot together with 9 gallons of water per minute to (77) and overflow with 95 gallons of water per minute to (67).

67. One water tank with a capacity of 1,000 gallons. From (65) and (66); delivers spigot together with 10 gallons of water per minute to (77); discharge with 103 gallons of water per minute to (53), (56), (57), (60), (61), (62), (68), (69), and of this amount 24 gallons per minute are required to wash along the lead concentrates in the launders from the Wilfley tables and vanners to (83) and 7 gallons per minute to wash the copper concentrates from the Wilfley tables to (84). Also delivers the overflow with 107 gallons of water per minute to (77).

68. Five 6-foot Frue vanners making 1-inch throws. Each vanner handles about 9 tons per 24 hours. From (64) and (65) with 4 gallons of wash water per minute for each vanner from (67); deliver concentrates together with 5 gallons of water per minute to (83) and tailings with 40 gallons of water per minute to (70).

69. Four 6-foot Frue vanners with details as in (68). From (72) with 4 gallons of wash water per minute for each vanner from (67); deliver concentrates together with 4 gallons of water per minute to (83) and tailings with 28 gallons of water per minute to (74).

70. One 16-inch elevator with details as in (63). From (68) and (81) with 5 gallons of fresh water per minute from (89); delivers to (71).

71. Richards' vortex classifier with one 16-inch compartment, one 3-inch sorting column, and no rising current. From (70); delivers spigot together with 6 gallons of water per minute to (63) and overflow with 61 gallons of water per minute to (72).

72. One 5-foot conical pulp thickener. From (71); delivers spigot together with 16 gallons of water per minute to (69) and overflow with 45 gallons of water per minute to (73).

73. One 10-foot conical pulp thickener. From (72); delivers spigot together with 20 gallons of water per minute to (74) and overflow with 25 gallons of water per minute to (77).

74. One 54-inch Frenier pump with a 16-foot lift. From (69) and (73); delivers to (75).

75. Three canvas tables, 12 × 20 feet, with slopes of 2.25 inches to the foot and covered with 18-ounce duck. From (74) with 10 gallons of wash water per minute from (89); deliver lead concentrates together with 5 gallons of water per minute to (83) and slime tailings with 53 gallons of water per minute to waste.

76. Three tailings settling tanks, 10 × 10 feet. From (51) and (63); deliver discharges intermittently together with 25 gallons of water per minute via bottom gates and 8-ton cars, to waste, and overflows with 130 gallons of water per minute to (77).

77. Four clarifying tanks, 9 × 18 feet. From (52), (54), (55), (56), (57), (58), (59), (60), (61), (62), (64), (66), (67), (73), (76), (81), and (86); deliver spigots together with 51 gallons of water per minute to (78) and overflows with 497 gallons of water per minute to (88).

78. One sand trap which serves both sections. From (77); delivers spigot together with 3 gallons of water per minute to waste and overflow with 48 gallons of water per minute to (79).

79. Two 3-inch centrifugal pumps which serve both sections. One used and one held as a reserve. From (78); deliver 48 gallons per minute to (80).

80. Two 54-inch Frenier pumps in series and serving both sections. From (79); deliver 48 gallons per minute to (81).

81. One pulp thickener, 9 × 18 feet, serving both sections. From (80); delivers spigot together with 22 gallons of water per minute to (70) and overflow with 26 gallons of water per minute to (77).

82. Eight coarse-lead concentrates bins made of wood with bottoms sloping at 45°. Each holds 15 tons. The product of these bins will assay about as follows: 49.0% in lead, 1.0% in copper, 10.0% in iron, 7.0% in zinc, 4.0% in silica, 0.35 ounce in gold, and 29.0 ounces in silver per ton. From (22), (28), (31), (33), (39), (41), and (46); deliver overflows together with 39 gallons of water per minute to (87) and concentrates, via rack and pinion operated side gates, 1-ton tram bucket, 100-ton loading bin, and cars, to smelter.

83. Fine-lead concentrates bin, 16 feet long by 4 feet wide by 4.5 feet deep. Each is made of concrete and holds 30 tons. The product of these bins will assay about as follows: 32.0% in lead, 1.5% in copper, 14.0% in iron, 9.0% in zinc, 4.5% in silica, 0.48 ounce in gold, and 26.0 ounces in silver per ton. From (52), (54), (55), (58), (59), (60), (62), (68), (69), (75), (77), and (90); deliver overflows together with 46 gallons of water per minute to (87) and concentrates, via shovel, patio, and cars, to smelter.

84. Copper-concentrates bins for both sections. The product of these bins will assay about as follows: 8.0% in lead, 1.8% in copper, 20.0% in iron, 15.0% in zinc, 5.5% in silica, 0.26 ounce in gold, and 13.0 ounces in silver per ton. From (53), (56), (57), (61), (62), and (77); deliver overflows together with 15 gallons of water per minute to (87) and concentrates, via cars, to smelter.

85. One 8-inch elevator with a 6-ply belt having a life of 120 days, or while handling 57,300 tons, and buckets, 4 × 6 inches, set 18 inches apart, which elevate the ore 48 feet and have a life similar to that of the belt. The upper pulley is 30 and the lower 18 inches in diameter. Serves both sections. From (53), (56), (57), (60), (61), and (62), with 3 gallons of water per minute from (89); delivers to (86).

86. Three zinc-settling basins which serve both sections. From (85); deliver settlings to stock pile for future treatment in the proposed magnetic plant, which will be similar to the one installed at Velardeña, and overflows with 24 gallons of water per minute to (77).

87. One concentrates-settling basin which serves both sections. From (82), (83), and (84); delivers overflow together with 94 gallons of water per minute to (88) and settlings periodically, via cars, to smelter.

88. Lower main reservoir with a capacity of 240,000 gallons which serves both sections. From (77), (87), and 104 gallons of water per minute from the scrubber at the gas plant; delivers to (89).

89. Two Morris centrifugal pumps. Only one used, the other held in

reserve. Serve both sections. Direct connected to a General Electric 3-phase. 440-volt, 25-cycle, 85 horse-power motor making 750 revolutions per minute. From (88); deliver 381 gallons of water per minute to (90), 286 gallons of water per minute to (91) and to (63), (70), (75), and (85).

90. One water tank with a capacity of 8,600 gallons. From (89); delivers 3 gallons of water per minute to wash table concentrates in launder to (83), 43 gallons per minute to (92) and to (22), (28), (31), (33), (34), (39), (41), (42), (46), (52), (54), (55), (58), and (59).

91. One water tank with a capacity of 1,400 gallons. From (89); delivers 81 gallons of water per minute to (94) and to (22), (28), (30), (31), (35), (36), (37), (44), and (51).

92. One 2.5-inch Gould centrifugal pump making 780 revolutions per minute and elevating 35 feet. From (90); delivers 43 gallons of water per minute to (93).

93. One water tank with a capacity of 390 gallons serving both sections. From (92); delivers to (22) and (34).

94. One classifier-water tank. From (91); delivers to (32), (38), (40), (45), (48), and (49).

Labor and Wages.

The mill is operated two 12-hour shifts per day and 7 days a week. There are employed about 5 Americans and 30 Mexicans per shift; the wages of the Americans being 10 Pesos, and for the Mexicans 2 Pesos for jig and table men and 1.20 Pesos for peons.

Power.

All machines are electrically driven and derive their power from the central power house which also furnishes all the power for mine ventilation, pumping, lighting, etc. In this power house there are seven 265 horse-power American-Crossley, 2-cylinder, 4-cycle gas engines operated on the Loomis-Pettibone system of producer gas, using both coal and wood. The old steam plant required 4 times as much fuel as is now used. The gas engines are belted to 3-phase, 25-cycle, 480-volt generators, and the current so generated is distributed from the central switchboard to the several motors about the plant at the same voltage. The following motor distribution applies to the whole mill. All the motors are 3-phase, 25-cycle, 440-volt, General Electric Company induction motors of type I, form K, and having synchronous speeds of 750 revolutions per minute with the exception of the re-grinding motors which have speeds of 500 revolutions per minute.

Department.	Number.	Horse-power.	Total.	Horse-power Actually Used Including Shafting.
Coarse crushing	1	85	85	42
Fine "	1	75	75	70
Conveyor	1	15	15	5
Zinc elevator	1	10	10	5
Screening, elevating, and jigging	2	35	70	68
Re-grinding	2	50	100	100
Tables, vanners, and elevators	2	35	70	29
Totals	10		425	325

Water.

The Segovia pumping station has one Byron-Jackson, 3-stage, 300-gallon centrifugal sinking pump direct connected to a West, 3-phase, 440-volt, 25-cycle, 40 horse-power induction motor making 1,500 revolutions per minute, and a

Jeansville 10 × 6 × 12-inch duplex plunger pump as a reserve. This delivers 217 gallons of water per minute to a clear-water reservoir which has a capacity of 2,500 gallons. This reservoir delivers 10 gallons per minute for use in the locomotives, assay office, employees' living quarters, fire system, etc., and 207 gallons per minute to the upper main reservoir.

The Palo Blanco pumping station has one Deane 8 by 8-inch vertical triplex single-acting pump making 27 revolutions per minute and one 10 × 5 × 13-inch Cameron sinker both belted to a General Electric 3-phase, 220-volt, 60-cycle, 20 horse-power induction motor making 900 revolutions per minute. These deliver 38 gallons of water per minute to a clear-water reservoir which has a capacity of 2,700 gallons. This reservoir delivers 6 gallons per minute which unites with the 10 gallons from the similar reservoir above referred to, and 32 gallons per minute to the upper main reservoir.

The power house pumping plant has three Deane vertical triplex pumps, all making 40 revolutions per minute. One 8 × 8 inches, single acting; one 6 × 8 inches, single acting; and one 5.5 × 8 inches, double acting. All are belted to a West 3-phase, 440-volt, 25-cycle, 30 horse-power induction motor making 1,500 revolutions per minute and deliver 205 gallons of water per minute to the upper main reservoir.

The upper main reservoir has a capacity of 232,000 gallons and delivers 321 gallons of water per minute to the gas plant, which evaporates 16 gallons per minute and delivers the remainder to the lower main reservoir, and 216 gallons per minute to the power house, which evaporates 11 gallons per minute and delivers the remainder back through the pumps to the upper main reservoir.

The lower main reservoir has a capacity of 240,000 gallons and delivers 1,390 gallons of water per minute, via Morris centrifugal pumps (89), to the entire concentrator, which returns 1,182 gallons per minute and shows a loss of 208 gallons per minute, 93 gallons per minute to the auxiliary pumping plant, and 4 gallons per minute to the Tecolotes Arroya.

The auxiliary pumping plant has one Worthington 6.5 × 8-inch vertical single-acting triplex pump making 70 revolutions per minute and one Deane 7.5 × 10-inch pump of similar style and dimensions making 52 revolutions per minute. Each is belted to a General Electric 3-phase, 220-volt, 60-cycle induction motor, and they deliver 93 gallons of water per minute to the upper main reservoir.

The total water lost by the concentrator is 208 gallons per minute out of 1,390 which are in circulation, and the total loss in the whole plant, including evaporation, etc., is only 235 gallons per minute.

§ 1472. MILL NO. 140. THE NEW WILFLEY ROASTER MILL OF THE COLORADO ZINC COMPANY, DENVER, COLORADO.[91] [191] — The mill has a capacity of 75 tons per 24 hours.[123] The ores treated are sulphides of lead, zinc, and iron containing small quantities of silver and gold in a quartz gangue, and the problem is to save and separate the lead, zinc, and iron values in which the silver and gold occur.

The ore [181] comes via standard gauge railroad cars and track scales, and is delivered to (1).

1. Bins. From cars; deliver, via feeder, to (2).
2. Revolving drier. From (1); delivers to (3).
3. Shaking screen of 20 mesh. From (2) and (5); delivers oversize to (4) and undersize to (6).
4. Rolls crushing dry. From (3); deliver crushed ore to (5).
5. Shaking screen of 4 mesh. From (4); delivers undersize, via elevator, to (3) and oversize, which is made up of pieces of wood, etc., to the waste dump.
6. Storage bin. From (3); delivers to (7).

7. Wilfley roasting furnace.[74] From (6); delivers ore, with the pyrite roasted to a magnetic sulphide, to (8). From 10 to 15% of the sulphur is driven off. The furnace has a capacity of 100 tons per 24 hours and uses 25 gallons of water per minute in the water jackets.

8. Water-jacketed screw conveyor. From (7); delivers cooled ore, via elevator, to (9).

9. Storage bin. From (8); delivers to (10).

10. Four Dings magnetic separators. From (9); deliver a magnetic or iron product, representing from 40 to 50% of the feed, to (18) and a non-magnetic or lead-zinc-silica product, representing from 45 to 35% of the feed, to (11). Each separator has a capacity of 15 tons per 24 hours and requires 0.5 horse-power for mechanical drive and 1.5 horse-power for exciting the magnets.

11. Shaking screen of 40 mesh. From (10); delivers oversize to (12) and undersize to (13).

12. One Wilfley table. From (11); delivers zinc concentrates to (17) and silica tailings to waste in creek.

13. Two Wilfley tables. From (11); deliver lead-zinc concentrates to (14), zinc-silica middlings to (15), and silica tailings to waste in creek.

14. One Wilfley table. From (13); delivers lead concentrates to (16) and zinc concentrates to (17).

15. One Wilfley table. From (13); delivers zinc concentrates to (17) and silica tailings to waste in creek.

16. Shipping bin for lead concentrates. From (14); delivers, via railroad cars, to smelter.

17. Shipping bin for zinc concentrates. From (12), (14), and (15); delivers, via railroad cars, to smelter.

18. Shipping bin for iron products. From (10); delivers, via railroad cars, to smelter.

In roasting, the high temperature changes the zinc and lead sulphides in such a manner that even the finest particles will not float. This makes it possible to make a very close separation of the lead and zinc minerals on the tables. When treating this roasted ore on the tables the wash water runs clear. When the same ore is treated in crude form without roasting, the wash water will contain from 10 to 15% of leady-zinc slimes.

The mill runs three 8-hour shifts per day. Four men per shift are employed.

§ 1473. MILL NO. 141. CONCENTRATING MILLS OF THE EMPIRE ZINC COMPANY, CANON CITY, COLORADO.[114] — Crushing plant for both the wet and dry mills. Three horse-power is required per ton of ore treated to run the machinery in this department.

The ores from various mines are delivered to (1).

1. Railway cars. From the mines; deliver to (2).

2. Grizzly with 1-inch spaces between the bars, 78 inches long by 30 inches wide, and having a slope of about 26°. There are 18 bars each 0.75 × 2 × 78 inches. From (1); delivers oversize to (3) and undersize to (4).

3. Blake breaker with a jaw opening 10 × 20 inches and making 230 thrusts per minute. From (2); delivers crushed ore to (4).

4. Two 18-inch belt conveyors with 8-ply canvas belts having conveying lengths of 10 feet, speeds of 260 feet per minute, and slopes of 12°. From (2) and (3); deliver to (5).

5. Sixteen-inch elevator with an 8-ply canvas belt having a speed of 300 feet per minute, 14-inch pressed-steel buckets set 20 inches apart, and elevating the ore 20.5 feet. From (4) and (8); delivers to (6).

6. Rigid steel perforated plate, 18 × 72 inches, having perforations 0.5 × 1 inch and a slope of 43°. From (5); delivers oversize to (7) and undersize to (9).

7. Geared rolls, 16 × 36 inches, making 28 revolutions per minute, and having forged-steel shells. From (6); deliver crushed ore to (8).

8. Trommel, 2.5 × 8.5 feet, making 20 revolutions per minute, and having sheet-steel plates with perforations 0.5 × 1 inch. From (7); delivers oversize to (5) and undersize to (9).

9. Fourteen-inch elevator with an 8-ply canvas belt having a speed of 300 feet per minute, 12-inch pressed-steel buckets set 20 inches apart, and elevating the ore 55 feet. From (6) and (8); delivers to (10).

10. One wooden crushed-ore bin having a capacity of 250 tons and a bottom sloping at 50°. From (9); delivers, via ore feeder and chute, periodically to (11) and (38).

Wet Mill.

This mill has a capacity of 50 tons per 24 hours and was erected in 1901 before magnetic separation was found suitable for many of the Colorado zinc ores. It handles ores containing galena and sphalerite with pyrite and silica; but since the erection of the dry mill, the wet mill is only used for such ores as are suitable for that treatment and cannot be satisfactorily worked magnetically. The problem is to save the gold and silver-bearing galena and sphalerite. This department requires 23 horse-power to run the machinery and shafting per ton of ore treated.

11. Fourteen-inch belt conveyor with a 6-ply rubber belt having a conveying length of 11 feet, a speed of 250 feet per minute, and run level. From (10); delivers to (12).

12. Thirteen-inch elevator with a 6-ply canvas belt having a speed of 300 feet per minute, 12-inch pressed-steel buckets set 36 inches apart, and elevating the ore 36.67 feet. From (11); delivers to (13).

13. Trommel with a screen having 5 meshes to the inch. Water is first introduced here. From (12) and (15); delivers oversize to (14) and undersize to (16).

14. Rolls, 16 × 36 inches, making 55 revolutions per minute, and having forged steel shells. From (13); deliver crushed ore to (15).

15. Thirteen-inch elevator with a 6-ply rubber belt having a speed of 300 feet per minute, 12-inch pressed-steel buckets set 36 inches apart, and elevating the ore 41.42 feet. From (14); delivers to (13).

16. Callow duplex belt-screen using 16 and 18 mesh, Nos. 26 and 28 brass wire cloth screens respectively, and having a speed varying according to the capacity required. No. 30 gauge wire is better than 26 and is about the coarsest that should be used, as the wear is due to bending the wires around the drum rather than to the direct wear of the ore. A screen lasts about 5 weeks and handles about 1,500 tons of ore. It does good work and should be especially satisfactory on the finer sizes. This screening was formerly performed by shaking screens, but these were expensive to keep up and were the cause of many shut-downs. From (13) and (20); delivers oversize to (17) or (19) and undersize to (21).

17. One New Century, 5-compartment, drop-motion jig. Jig and plunger compartments of same size, the sieves being made of perforated brass plate 23.5 × 35 inches. 0.094-inch holes in No. 16 plate, also 0.084-inch and 0.05-inch holes in No. 22 plate, are used. Plungers make 155 strokes per minute. From (16); delivers lead or iron product, via wheelbarrow, to (37), middlings to (18), and tailings to dump.

18. Belt scraper or dewaterer having sheet-steel blades, 5 × 5 × 12 inches, bolted 6 inches apart onto a rubber belt 12 inches wide traveling up a 34° slope at a speed of 35.3 feet per minute. Pulleys are 30 inches in diameter and 13.5

feet between centers. A wooden bottom extends all along the lower half of the belt and about 6 inches below it. Designed by R. M. Henderson. From (17); delivers ore to (19) and water to (29).

19. Rolls, 16 × 36 inches, making 75 revolutions per minute, and having forged-steel shells. From (16) and (18); deliver crushed ore to (20).

20. Thirteen-inch elevator with a 6-ply rubber belt having a speed of 300 feet per minute, 12-inch pressed-steel buckets set 30 inches apart, and elevating the ore 34.5 feet. From (19); delivers to (16).

21. Boggs and Clarke, No. 2, centrifugal pump having a capacity of about 45 tons and a lift of 15.5 feet. From (16) and (33); delivers to (22).

22. Iron cone-classifier built by the Mine and Smelter Supply Company, 20 inches in diameter and 43 inches high. From (21); delivers spigot to (24) and overflow to (23).

23. Iron V-shaped settling tank, 8 × 10 × 16 feet, having 9 spigots. From (22) and (33); delivers spigots to (25) and overflow to well.

24. Two No. 4 Wilfley tables making 250 strokes per minute. From (22); deliver lead and zinc products to (26), middlings to (27), and tailings to (28).

25. Four No. 4 Wilfley tables making 250 strokes per minute. From (23); deliver lead and zinc products to (26) and (34), tailings to (28), and slimes to (29).

26. Two 49-foot shaking launders making 200 1-inch strokes per minute, having slopes of 0.125 inch to the foot and driven by a Wilfley No. 4 special head-motion. From (24) and (25); deliver to (34).

27. Two No. 4 Wilfley tables making 250 strokes per minute. From (24); deliver lead and zinc products to (34) and tailings to (28).

28. Boggs and Clarke No. 1.5 centrifugal pump having a lift of 12 feet. From (24), (25), and (27); delivers to dump.

29. Thirteen-inch elevator with a 6-ply rubber belt having a speed of 300 feet per minute, 12-inch pressed-steel buckets set 18 inches apart, and elevating the ore 20.17 feet. From (18) and (25); delivers to (30).

30. Wooden V-shaped settling tank, 8 × 12 × 14 feet. From (29); delivers spigot to (32) and overflow to (31).

31. Circular settling basins, 27.5 feet in diameter and 3 feet deep at the centers and 1 foot at the rims. From (30); deliver settled slimes to settling pond and clear water overflows to well.

32. Boggs and Clarke, No. 1.5 centrifugal pump having a lift of 30 feet. From (30); delivers to (33).

33. Galvanized-iron cone classifier, 12 inches in diameter, made in Leadville. From (32); delivers spigot to (21) and overflow to (23).

34. Two 16-foot shaking launders making 250 0.5-inch strokes per minute, having slopes of 0.25 inch to the foot and driven by a No. 4 Wilfley head motion. Suspended by boards from beams overhead. From (25), (26), and (27); deliver to (35).

35. Two Frenier spiral sand pumps. One, 6 × 54 inches, having a lift of 17 feet; and the other, 10 × 54 inches, having a lift of 20 feet. From (34); deliver to (36).

36. Four wooden dewatering-boxes, 25 × 30 × 69 inches. From (35); deliver to (37), slimes to settling pond, and clear water to well.

37. Two wooden shipping bins each having a capacity of 250 tons and bottoms sloping 50°. One bin for lead-iron products and one for zinc-iron products. From (17) and (36); deliver, via ore feeders, chutes, and railroad cars, to smelters. If much pyrite is present in the zinc-iron product it is delivered, via ore feeder and chute, to (38).

In the wet mill there are employed two 12-hour shifts, excepting in some

cases where the men are required to do heavy, continuous manual labor, when the shifts are but 8 hours long. There are 3 men to a shift outside of those employed in loading the products from the shipping bins into the cars. Wages vary from $2 to $3.50 per shift.

Water for running the wet mill and for fire protection is obtained from a reservoir at the foot of the hills, 2 miles away and at an elevation of 440 feet. The amount of water used has never been measured, but an estimate of 150 gallons or less of fresh water, per ton of ore treated, when the wet mill is running continuously, has been given. Owing to the limited water supply available, all water leaving the mill is settled and, together with the clean water from the settling basins and wells, is re-used.

Dry Mill.

This department has a capacity of 150 tons per 24 hours and handles ores containing galena and sphalerite with pyrite and silica which are obtained from Leadville, Breckenridge, and other places. The problem is to separate the zinc minerals from the others. The ore is crushed and dried but not roasted. It is then screened to the proper sizes and treated on magnetic separators. The machinery from numbers (40) to (50) inclusive require 4.5 horse-power, and the remainder of the machinery including direct-current generators and shafting requires 24 horse-power, per ton of ore treated.

38. Twelve-inch belt conveyor with a 6-ply rubber belt having a conveying length of 98 feet, a speed of 155 feet per minute, and a slope, for a part of the way, of 19°. From railroad cars, (10), and sometimes from (37); delivers to (39).

39. Two cast-iron revolving driers, 23 feet long by 40 inches in diameter, having no lining and making 5 revolutions per minute. (38) and (39) are driven by a 20 horse-power General Electric alternating-current motor, through shafting, belts, and gears. From (38); deliver dry ore to (40).

40. Hoe conveyor, 1.4 × 40.5 feet, with paddles set 9 inches apart and driven by a crank-arm motion. Manufactured by Stearns Rogers Manufacturing Company. From (39); delivers to (41).

41. Thirteen-inch elevator with a 6-ply rubber belt having a speed of 300 feet per minute, 12-inch pressed-steel buckets set 18 inches apart, and elevating the ore 48.5 feet. From (40) and (43); delivers, via roller feeder, to (42).

42. Rowand incline screen with perforated steel plates, 4 plates wide by 10 plates high, having slots 2.54 × 1.47 millimeters. Height required, including roller feeder, 19 feet. Very satisfactory for dry screening. From (41); delivers oversize to (43) and undersize to (44).

43. Rolls, 16 × 36 inches, making 55 revolutions per minute and having forged-steel shells. From (42); deliver crushed ore to (41).

44. Thirteen-inch elevator with a 6-ply rubber belt having a speed of 300 feet per minute, 12-inch pressed-steel buckets set 18 inches apart, and elevating the ore 48.5 feet. From (42) and (46); delivers, via roller feeder, to (45).

45. Rowand incline screen with slots 2.54 × 0.61 millimeter and other details like those in (42). From (44); delivers oversize to (46) and undersize to (47).

46. Rolls, 16 × 36 inches, making 80 revolutions per minute and having forged-steel shells. From (45); deliver crushed ore to (44).

47. Eleven-inch elevator with a 6-ply rubber belt having a speed of 300 feet per minute, 10-inch pressed-steel buckets set 18 inches apart, and elevating the ore 41 feet. From (45) or (48); delivers to (48) or (49).

48. One wooden storage bin having a capacity of 80 tons and a bottom sloping at 50 degrees. From (47); delivers, via ore feeder and chute, to (47).

49. Dust remover which consists of a roller for distributing the ore in a

stream through which air is pulled by means of 2 exhaust fans, the amount removed being regulated by openings in the front of the casing. Satisfactory. From (47); delivers dust to (69) and dust-free ore to (50) or (55).

50. Eighteen-inch belt conveyor with a 6-ply rubber belt having a conveying length of 15.75 feet, a speed of 250 feet per minute, and run level. From (49); delivers to (51).

51. One Rowand, type F, magnetic separator. From (50); delivers magnetic product to (52) and non-magnetic product to (55).

52. Six-inch belt conveyor with a 3-ply rubber belt having a conveying length of 33 feet, a speed of 250 feet per minute, and run level. From (51); delivers to (53).

53. Seven-inch elevator with a 5-ply rubber belt having a speed of 210 feet per minute, 6-inch pressed-steel buckets set 18 inches apart, and elevating the ore 38.33 feet. From (52); delivers to (54).

54. Wooden shipping bin having a capacity of 50 tons and a flat bottom. From (53); delivers, via ore feeder and railroad cars, to smelters.

55. Eleven-inch elevator with a 6-ply rubber belt having a speed of 300 feet per minute, 10-inch pressed-steel buckets set 18 inches apart, and elevating the ore 53.25 feet. From (49) and (51); delivers, via roller feeder, to (56).

56. Rowand incline screen with slots 2.54 × 0.69 millimeter and other details like those in (42). From (55); delivers oversize to (62) and undersize to (57).

57. Wooden storage bins each having a capacity of 50 tons and a flat bottom. From (56); deliver, via ore feeder, to (58).

58. Six Wetherill-Rowand, type E, magnetic separators each having a capacity of 0.5 ton per hour. These machines, together with those in (65), require 42 amperes with 120 volts from a direct-current generator and each has 3 sets of magnets; the first with 30,000, the second with 60,000, and the third with 100,000 ampere turns. Repairs are stated to be few and the work very satisfactory. From (57); deliver products separately to (59).

59. Six-inch belt conveyors with 3-ply rubber belts having conveying lengths of 35 feet, speeds of 250 feet per minute, and run level. From (58); deliver to (60).

60. Six 7-inch elevators with 5-ply rubber belts having speeds of 210 feet per minute, 6-inch pressed-steel buckets set 18 inches apart, and elevating the ore 38.33 feet. From (59); deliver to (61).

61. Wooden shipping bins each having a capacity of 50 tons and a flat bottom. From (60); deliver, via ore feeder and railroad cars, to smelters.

62. Eleven-inch elevator with a 6-ply rubber belt having a speed of 300 feet per minute, 10-inch pressed-steel buckets set 18 inches apart, and elevating the ore 27.75 feet. From (56); delivers, via roller feeder, to (63).

63. Rowand incline screen with slots 2.54 × 1.07 millimeters and other details like those in (42). From (62); delivers oversize and undersize to separate bins in (64).

64. Eleven wooden storage bins each having a capacity of from 15 to 20 tons with a bottom sloping at 58°. From (63); deliver periodically, via iron gates and spouts, to (65).

65. Four Wetherill-Rowand, type E magnetic separators with details like those in (58). From (64); deliver products to (66).

66. Four 6-inch belt conveyors with 3-ply rubber belts having conveying lengths of 43 feet, speeds of 250 feet per minute, and run level. From (65); deliver to (67).

67. Four 7-inch elevators with 5-ply rubber belts having speeds of 210 feet per minute, 6-inch pressed-steel buckets set 18 inches apart, and elevating the ore 38.33 feet. From (66); deliver to (68).

68. Wooden shipping bins each having a capacity of 50 tons and a flat bottom. From (67); deliver, via ore feeder and railroad cars, both iron and zinc products to smelters.

Dust System.

69. Three Cyclone dust-collectors. From (49) and all screen and roll housings, conveyors, elevators, etc., and deliver the dust to a bag house in which are cotton bags 30 feet long. The dust collected in these bags is delivered to (70).

70. Twelve-inch belt conveyor with a 3-ply rubber belt having a conveying length of 79.5 feet, a speed of 235 feet per minute, and a slope, for a part of the way, of 30°. From (69); delivers to (71).

71. Two wooden shipping bins each having a capacity of 200 tons and a flat bottom. From (70); deliver, via shovel and wheelbarrows, to railroad cars and thence to market.

Trommels were formerly used for screening but gave considerable trouble and were replaced by the stationary inclined screen designed by Mr. Lewis G. Rowand. This screen has proved very satisfactory, having a large capacity and a small repair cost. It is also so designed that a very small amount of the dust escapes into the air, which, of course, is a decided advantage to the men working in the mill.

The ore is handled in the yard and taken into the mill by contract, the contractors working 8-hour shifts. They pay their men from $2 to $2.50 per shift, according to the ability of the men.

The dry mill is run on 8-hour shifts, about 20 men being employed in 24 hours, 6 days a week. This number includes the day men on the loading and repair gang. Outside men work a 10-hour shift in the daytime. Rates of pay are from $2 to $3.25 per shift.

Power.

The various portions of the mill are driven by electric motors with an alternating 440-volt current supplied from a central power station 2 miles distant.

Testing Plant.

In designing the plant, the idea was to arrange it in such shape that tests made would give results on which could be figured work in the commercial mill, already described, especially in regard to recoveries and grades of products. The plant is so arranged that tests can be made either on a few pounds of ore or on carload lots. Mechanical appliances for handling material have been reduced to a minimum, consistent with satisfactory work, in order to minimize the losses and to be able to weigh the products at various stages of the tests.

Ore coming in railroad cars for testing is shoveled either to (1) or (2).

1. Platform bins. From cars; deliver, via chute, to (3).
2. Grizzly with 4-inch spaces between the bars. Ore hand-broken until it passes through. From cars; delivers, via chute, to (3).
3. 6-inch elevator. From (1) or (2); delivers to (4).
4. Dodge breaker with 7.5 × 12-inch jaw opening. From (3); delivers crushed ore to (5).
5. Elevator. From (4) and (7), (11), (12), (13), or (23); delivers to (6), (13), (14), or (20).
6. Vertical screen. From (5); delivers oversize to (7) and undersize to (8).
7. Rolls, 12 × 20 inches. From (6); deliver crushed ore to (5).
8. Ten-split sampler. From (6); delivers sample to (9) and reject to (10).
9. Sample bin or sack. From (8); delivers to assayer.
10. Vertical screen. From (8); delivers oversize to (12) and undersize to (11).

11. Steel storage-bin. From (10); delivers to (5).

12. Steel storage-bin. From (10); delivers to (5).

13. Five-foot Elmore vacuum oil-concentrator which is a full-sized unit. Although no ores have yet been found, in this district, suitable for this method of concentration, the machine seems to be mechanically satisfactory. From (5); delivers products to be sampled and assayed.

14. Belt conveyor. From (5); delivers, via feed hopper, to (15).

15. Roasting furnace, designed and patented by Mr. A. R. Wilfley, promises to give a very good method for the separation of iron pyrite from non-magnetic zinc sulphide. The ore, after being crushed and dried (16 or 18 mesh being as coarse as it will stand), is given a slight roast in the furnace and then passed over a magnetic separator to remove the iron pyrite that has been made magnetic. The tailings (containing non-magnetic, or comparatively non-magnetic, material such as zinc sulphide, galena, and gangue) are passed over a Wilfley or Sutton, Steele, and Steele table. This furnace, after being once started, requires only a small amount of coal, as the heat is furnished by the burning of the sulphur in the ore. From (14); delivers roasted ore to (16).

16. Revolving cooler. From (15); delivers cool ore, via wheelbarrow, to (17).

17. Steel elevator. From (16), (22), (26), (27), (28), (31), (32), (33), or (34); delivers to (18), (23), (33), (34), or any other types of concentrating machines now installed, or that may be added later.

18. Bins. From (17); deliver, via hopper, to (19).

19. Wetherill-Rowand type E magnetic separator which is a full-sized machine with 3 magnets, of 30,000, 60,000 and 100,000 ampere turns respectively. From (18) or (29); delivers concentrates and middlings to be sampled and assayed while the tailings go to (30), (31), or (32).

20. Rowand vertical drier. From (5) via automatic feed hopper; delivers dry ore to (22) and dust and gases taken from the stack, via No. 1, 30-inch exhaust fan, to (21).

21. Prinz and Rau dust collector. From (20) and (23); delivers dust to a small dust bin or sacks.

22. Shaking trough-conveyor. From (20); delivers to (17).

23. Steel dust-separator. From (17); delivers ore to (24) or (29) and dust, via No. 2, 30-inch exhaust fan, to (21).

24. Vertical screen. From (23); delivers oversize to (25) and undersize to (26).

25. Vertical screen. From (24); delivers oversize to (28) and undersize to (27).

26. Round steel storage-bin. From (24); delivers, periodically, to (17).

27. Round steel storage-bin. From (25); delivers, periodically, to (17).

28. Round steel storage-bin. From (25); delivers, periodically, to (17).

29. Hopper. From (23); delivers, via swivel spout and hopper, to (19).

30. Bin. From (19); delivers to sampler and assayer.

31. New Century 3-compartment jig which is a small machine built on the principles of the full-sized jig, furnished by the American Concentrator Company. From (19); delivers products to assayer, to (5) for re-crushing, or to (17) for re-treatment.

32. No. 5 standard Wilfley concentrating table. From (19); delivers products to assayer, to (5) for re-crushing or to (17) for re-treatment.

33. Sutton, Steele, and Steele pneumatic table which is full sized. It does good work and has a large capacity, but it is necessary to size very closely, due evidently to the continuous upward current of air through the cloth top of the table, which tends to arrange the various kinds of material in layers.

If the sizing is not very close, this means, for instance, that the zinc product will overlap the lead and the streak of gangue will overlap the zinc. From (17); delivers products to be sampled and assayed.

34. Sutton, Steele, and Steele static separator which is only a laboratory machine and but little work has so far been accomplished on it. From (17); delivers products to be sampled and assayed.

The plant also contains one shaking screen for screening small lots of ore and a laboratory vacuum machine for making preliminary tests on samples of a few ounces.

The motive power consists of one 50 horse-power General Electric motor, one 5 horse-power motor, and one 3 horse-power motor.

§ 1474. MILL NO. 142. THE HUMPHREY MILL OF THE CREEDE UNITED MINES, CREEDE, COLORADO.[137] — This mill has a maximum capacity of 275 tons per 24 hours but the more usual tonnage is 150 tons.[116] The minerals, galena, sphalerite, pyrite, hematite, gold, and silver occur in intimate association with, and disseminated through, the altered trachyte and quartz. The small gold and silver values are in proportionate values of about $3 gold to $1 silver and the gold is sufficiently coarse to permit the larger part of it being recovered on concentrating tables. The crude ore will run about 11% in lead, 5% in zinc, 2.5% in iron, and 60% in silica. The problem is to save the lead, zinc, gold, and silver values. The mill is a wooden structure and is located on a steep hillside. The ore is horse-trammed in two-ton cars (seven cars to a train) a distance of about one-half a mile from the portal of the Wooster tunnel to (1).

Rock House.

1. Bins of 400 tons capacity. From the mine; deliver to (2).

2. Grizzlies with 2-inch spaces between the bars. From (1); deliver oversize to (3) and undersize to (4).

3. Picking floor. From (2); delivers waste to dump and milling ore to (4).

4. Bins. From (2) and (3); deliver, via hand-operated lever gates, to (5).

5. Cars of 20 cubic-feet capacity. From (4), weighed on platform scales of 5,000 pounds capacity, hauled 200 feet, and dumped onto (6).

Concentrator.

6. Grizzly with 1.5-inch spaces between the bars. From (5); delivers oversize to (7) and undersize to (8).

7. Blake breaker with a 10 × 20-inch jaw opening making 253 thrusts per minute and breaking to 1.5 inches. From (6); delivers crushed ore to (8).

8. Mill bin of 75 tons capacity. From (6) and (7); delivers to (9).

9. Bolthoff feeders making 100 revolutions per minute. From (8); deliver to (10).

10. Automatic samplers which cut out a sample of 1 part in 100 every 3 minutes. From (9); deliver sample to sample room and reject to (11).

11. Roughing screen, 3 × 3 feet, making 20 revolutions per minute, and screening to 3 mesh. From (10); delivers oversize to (12) and undersize to (13).

12. McFarlane coarse rolls, 14 × 36 inches, making 62 revolutions per minute and crushing to 0.5 inch. From (11); deliver crushed ore to (13).

13. Vertical elevator with 7 × 12-inch buckets which elevate the ore 36 feet. From (11), (12), and (15); delivers to (14).

14. Trommel, 3 × 6 feet, with a 4-mesh Tyler double-crimped steel-wire screen, making 19 revolutions per minute. From (13); delivers oversize to (15) and undersize to (16).

15. McFarlane finishing rolls, 14 × 36 inches, making 62 revolutions per minute and crushing to 16 mesh. From (14); deliver crushed ore to (13).

16. Trommel with a Tyler double-crimped steel-wire screen and other details as in (14). From (14); delivers oversize to (19) and undersize to (17).

17. Trommel with a 10-mesh Tyler double-crimped steel-wire screen and other details as in (14). From (16); delivers oversize to (20) and undersize to (18).

18. Trommel with a 16-mesh Tyler double-crimped steel-wire screen and other details as in (14). From (17); delivers oversize to (21) and undersize to (22).

19. Four 4-compartment Harz jigs with 4-mesh sieves and plungers making 180 strokes per minute. From (16); deliver the first two hutch products, as concentrates, via launder, to (34); the last two hutch products, as middlings, to (23); and the tailings to (23).

20. Four 4-compartment Harz jigs with 6-mesh sieves and plungers making 240 strokes per minute. From (17); deliver the first two hutch products, as concentrates, via launder, to (34); the last two hutch products, as middlings, to (23); and the tailings to (23).

21. Four 4-compartment Harz jigs with 10-mesh sieves and plungers making 256 strokes per minute. From (18); deliver the first two hutch products, as concentrates, via launder, to (34); the last two hutch products, as middlings, to (23); and the tailings to (23).

22. Two Bartlett tables which act as jigs and over which a rough separation of a high-grade lead product is made which runs about 80.0% in lead. From (18); deliver concentrates, via launder, to (34) and tailings to (23).

23. Two Fitzgerald shaking screen-launders. From (19), (20), (21), and (22); deliver water, which contains more or less values in slimes, via launder, to (27) and residue to (24).

24. Three bins. From (23); deliver to (25).

25. Three Challenge-type feeders. From (24); deliver to (26).

26. Three 5-foot Chili mills making 34 revolutions per minute and crushing through 20 mesh. From (25); deliver pulp to (28).

27. Tank for table wash water. From (23); delivers to (29), (30), and (31).

28. Bosco sizers with 2 spigots. From (26); deliver the first spigots to (29), second spigots to (30), and overflows to (32).

29. Four Wilfley tables. From (27) and (28); deliver lead concentrates to (34), middlings to (31), and tailings, via launder, to (32).

30. Two Wilfley tables. From (27) and (28); deliver lead concentrates to (34), middlings to (31), and tailings, via launder, to (32).

31. Six Wilfley tables. From (27), (29), and (30); deliver lead concentrates to (34), zinc concentrates to (35), and tailings, via launder, to (32).

32. Settling tank. From (28), (29), (30), and (31); delivers spigot to (33) and overflow to waste.

33. Slime plant with canvas tables. From (32); delivers lead concentrates to (34) and tailings to dump.

34. Drainage tank for lead concentrates. From (19), (20), (21), (22), (29), (30), (31), and (33); delivers lead concentrates, via cars, to smelter.

35. Drainage tank for zinc concentrates. From (31) via wheelbarrow; delivers zinc concentrates, via cars, to smelter.

The lead product runs about 65% in lead, 8.5% in zinc, 1.5% in iron, 2% in silica, and has 85% of the recovered gold and silver values. It carries from 4 to 5% in moisture when it reaches the smelter.

The zinc product runs about 45% in zinc, 2% in iron, and 13.5% in silica. It carries from 7 to 9% in moisture on reaching the smelter.

The concentration ratio is about 11 into 1 for the lead, 18 into 1 for the zinc, and 7 or 8 into 1 for the crude ore.

When running at full capacity the monthly shipments of concentrates amount to about 1,000 tons, 650 to 700 tons of which are lead concentrates.

Labor.

Of similar mills in the State of Colorado this is possibly the most economically run. When running at full capacity the mill force is made up of 7 mill hands, 1 foreman, 1 man on repair work, and when using steam power, 1 engineer.

Power and Water.

Water is taken from about one-half mile above the mill, at the Wooster tunnel, and conveyed, by a 36-inch wooden flume, into a 212-foot column pipe which is 16 inches in diameter and located back of the mill. It delivers to the wheel pit. A 10-inch take-off pipe, entering the main flume, delivers the necessary milling water to a tank in the scale room, from which it is gravity piped to the various machines.

The wheel pit is separately housed and walled alongside the main building on a level with the railroad track. There are 2 Pelton wheels, one 6 feet and the other 4 feet in diameter, attached to the same 75-foot 1.25-inch steel rope drive which drives the mill shafting; the two water wheels are arranged to run on the same shaft or may run disconnected, the smaller wheel having a separately attached shafting for running the tables and dynamos while the larger wheel drives the crushers, rolls, jigs, and Chili mills.

In the steam power plant there is a 200 horse-power, 12 and 22 × 36-inch Corliss compound-condensing engine, steamed by two coal-fired, 150 horse-power Hendrie and Bolthoff boilers. This engine is connected with the main water-wheel shafting, above the wheel pit, by a 200-foot 1.5-inch steel rope drive. It is but rarely, however, that more than 150 horse-power is generated by the steam power plant, and the engine is in commission only about 8 months in the year. Steam and water power are used jointly for about 4 months in the year and water-power alone for about 4 months.

J. MILLS SAVING GOLD, SILVER, LEAD, AND COPPER VALUES.

Under this group come Mills 143 and 144.

§ 1475. MILL NO. 143. GOLD PRINCE MILL, ANIMAS FORKES, COLORADO.[132] — Large portions of the lode are simply barren vein material of blue-white quartz and massive rhodonite, the ore streaks occurring irregularly in the veins between partitions of rhodonite.[159] The common ore minerals are gold, both free in a gangue of quartz and rhodonite, and associated with pyrite, sphalerite, galena, chalcopyrite; and silver, usually in tetrahedrite, replacing part of the copper. The mass of the ore is low grade and its value will not exceed $12 to $15 per ton. It is estimated that ores carrying as low as $5 per ton in values can be milled at a profit, for it is said that the total mining and milling cost will not exceed $2.50 per ton.

The problem is to save the gold, silver, copper, lead, and zinc values.

The ore comes from the mine,[77] via cars, and is delivered to (1).

1. Gates No. 6 "K" gyratory breaker, breaking to 3 inches and operated by a 50 horse-power motor making 850 revolutions per minute with a 440-volt current. From the mine; delivers crushed ore to (2).

2. Conveyor belt, 22 inches wide and 67 feet long. Operated by a 15 horse-power motor. From (1); delivers to (3).

3. Two steel bins, each having a capacity of 500 tons. From (2); deliver to (4).

4. Aerial tramway, of the Bleichert type, 2.37 miles long with a difference in elevation of 1,100 feet. The load cable is 1.375, the return cable 1.125, and the traction cable 0.75 inch in diameter, and the latter is composed of 7 wire strands. A 40 horse-power Bullock motor controls the tram at a speed of 250 feet per minute. The buckets carry 1,500 pounds each and the system affords a safe hourly capacity of 50 tons. From (3); delivers to (5).

5. Receiving bin of 1,000 tons capacity. Built of structural steel and supported, 10 feet above the floor, on I-beam columns. For power see (6). From (4); delivers, via gates and plunger feeders, to (6).

6. Two belt conveyors, 22 inches wide. One on either side and below (5). A 10 horse-power motor drives the conveyors and also the plunger feeders in (5). From (5); deliver to (7).

7. Two trommels, 12 feet long with 1.5-inch holes, and heavy manganese-steel linings. From (6); deliver oversize to (8) and undersize to (9).

8. Two Farrel-Blake breakers, with 13 × 30-inch jaw openings. The capacity of each breaker is 300 tons in 10 hours. For power see (10). From (7); deliver ore, crushed to 1.5 inches, to (9).

9. Two elevators having belts 20 inches wide equipped with 7 × 18-inch buckets. The elevators are 50 feet high from center to center of the pulleys. For power see (10). From (7) and (8); deliver to (10).

10. Distributing conveyor, which consists of a 22-inch endless traveling belt whose end pulleys are 80 feet apart and idlers are supported by a wooden framed carriage running on a 5-foot gauge track above (11). A 100 horse-power motor, making 575 revolutions per minute with a current of 440 volts, drives (8), (9), and (10). From (9); delivers to (11).

11. Ten steel battery-bins, each having a capacity of 50 tons and sloping bottoms. From (10); deliver to (12).

12. Ten Challenge suspended feeders. From (11); deliver to (13).

13. One hundred stamps arranged in units of 10 stamps each. The battery frames are of heavy structural steel and, like the mortars, are supported by concrete foundations, resting on solid bed rock. The mortars are of narrow Homestake pattern with removable wearing parts. The stems are of special steel, the shoes, dies, cams, tappets, and bore-heads of chrome steel, the cams being of the self-tightening Canda pattern. There is an overhead crane of 2 tons capacity for handling the heavy parts about the batteries. The stamps weigh 965 pounds each, and, in doing duty of 5 tons per day, will drop from 5 to 7 inches at the rate of 100 to 105 drops per minute. The mesh of the discharge screens will vary for the different ores between 16 and 30 mesh. For power see (17). From (12); deliver pulp to (14).

14. Twenty silver-plated amalgamating plates, 12 feet long by 4.5 feet wide with stationary slopes. From (13); deliver pulp to (15) and amalgam to retort.

15. Forty mercury traps. From (14); deliver pulp to (16) and amalgam to retort.

16. Ten tanks. From (15); deliver to (17).

17. Ten Frenier spiral sand pumps. A 25 horse-power motor, situated over (13), drives each unit of 10 stamps and its pump. Motor makes 660 revolutions per minute with a 440-volt current. Lift, 16 feet. From (16); deliver pulp to (18).

18. Ten hydraulic classifiers with 2 spigots each. From (17); deliver first spigots to (19), second spigots to (20), and overflows to (21).

19. Twenty Card concentrating tables, driven by two 10 horse-power motors, each motor running 10 tables. From (18); deliver galena concentrates, containing the most of the gold and silver values, to (32); the zinc-iron concentrates, containing very few precious values, to (32); and tailings to (21).

20. Ten Card concentrating tables. For power see (27). From (18); deliver galena concentrates, containing the most of the gold and silver values, to (32); the zinc-iron concentrates, containing very few precious values, to (32); and tailings to (21).

21. Ten cone-classifiers. From (18), (19), and (20); deliver spigots to (22) and overflows to (23).

22. Five tube mills built by the Denver Engineering Works, 14 feet long and 5 feet in diameter, each driven by individual 30 horse-power motors running at 850 revolutions per minute with a 440-volt current. Lined with imported silex bricks, 2.5 × 4 × 8 inches, set on edge. The pebbles are imported from Denmark and have an average diameter from 2.5 to 3 inches. The charge of pebbles for each mill is about 4 tons. The mills make 28 revolutions per minute and have a capacity of 100 tons per 24 hours. From (21); deliver pulp, crushed through 60 mesh, to (23).

23. Ten distributing launders. From (21) and (22); deliver to (24).

24. Ten hydraulic classifiers. From (23); deliver spigots to (25) and overflows to (26).

25. Twenty Card concentrators. For power see (27). From (24); deliver galena concentrates, containing the most of the gold and silver values, to (32); the zinc-iron concentrates, containing very few precious values, to (32); and tailings to waste.

26. Ten hydraulic classifiers. From (24); deliver spigots to (27) and overflows to (28).

27. Twenty Card concentrators. (20), (25), and (27) are driven by six 10 horse-power motors. From (26) and (28); deliver galena concentrates, containing the most of the gold and silver values, to (32); the zinc-iron concentrates, containing very few precious values, to (32); and tailings to waste.

28. Ten slimes-settling tanks. From (26); deliver spigots to (27) and overflows to (29).

29. Slimes tank. From (28); delivers clear water to (30).

30. Pump. From (29); delivers to (31).

31. Mill storage tanks. There are two steel tanks on the top floor of the mill each holding 12,000 gallons of water which is replenished through a 12-inch pipe line from the Animas River. From (30); deliver to mill system.

32. Suspended tram buckets. From (19), (20), (25), and (27); deliver to (33).

33. Two-compartment shaking launder, 64 feet long. From (32); delivers galena concentrates to (34) and zinc-iron concentrates to (35).

34. Drying floors. Rectangular riveted steel compartments, 6 × 10 feet by 6 inches deep. Steam heated. From (33); deliver, via cars, to smelter.

35. One Argall multi-tubular drier. From (33); delivers dry concentrates to magnetic separating department or to cars.

The mill proper is 336 feet long by 184 feet wide and was designed and built by the Denver Engineering Works Company of Denver, Colorado, at a cost of about $500,000.

The steel frames are covered with 1-inch boards over which is laid heavy building paper, which in turn is sheathed with No. 22 corrugated steel sidings. All floors are of reinforced concrete, 4 inches thick, and suspended.

A mechanical forced-draft hot-air plant, provided with two coal-fired, marine-type, 100 horse-power boilers, heats the mill. The waste heat from these boilers is utilized by the drying rooms (34). Close to the drying rooms (34), and near (35), space is left for the future installation of a magnetic separator plant to re-treat the zinc-iron product.

It is claimed that an amalgamation recovery of the gold and silver values of from 10 to 40% will be made, depending on the varying character of the

ores treated. It is believed that the total recovery by amalgamation and concentration will be about 75%. When the magnetic plant is installed to treat the zinc-iron concentrates an extraction of close to 90% of the total metal values will be looked for.

Power.

The power for the operation of the mill comes in a 3-phase, alternating-current furnished by the Animas and Telluride Power Companies. It is transmitted at 10,000 volts and stepped down, for use in the mill, to 440 volts.

§ 1476. MILL NO. 144. SILVER LAKE MILL, GARFIELD SMELTING COMPANY, SILVERTON, COLORADO. — This mill has a capacity of 300 to 350 tons per 24 hours while the crushing department will handle 450 tons per 24 hours.[90] The mill was constructed in the latter part of 1906 and is based on six years' experience with an older mill which it replaces. The economic minerals are galena, chalcopyrite, pyrite, and sphalerite with gold and silver values in a gangue of quartz and rhodochrosite. The problem is to save the lead, copper, gold, and silver values.

The ore is crushed at the mine to pass a 2.5-inch ring and is delivered, via aerial tramway, to (1) at the mill.[180]

Crushing Department.

The coarse and fine-crushing plants run 20 hours daily and the capacities and machine products are given in tons per 20 hours.

1. Silver Lake tramway receiving-bin. From the tramway; delivers via two plunger feeders, to (2).

2. Two Colorado Iron Works breakers, with 4 × 24-inch jaw openings, breaking to 1 inch and making 280 thrusts per minute. Each handles 150 tons and requires 6.39 horse-power when empty and 12.37 horse-power under normal load. From (1); deliver crushed ore, via elevator, with a 28-foot lift, which, together with (9), requires 0.57 horse-power when empty and 1.29 horse-power under normal load, to (3).

3. One 20-inch belt conveyor with a conveying length of 80 feet and a speed of 320 feet per minute. Handles 300 tons and requires 2.23 horse-power when empty and 2.73 horse-power under normal load. From (2); delivers to (4).

4. One Harrington and King trommel 4 × 8 feet, having 15-millimeter round holes punched 0.875 inch between centers, in No. 3 steel, 18 spokes and a shaft, 3.4375 inches in diameter, which has a slope of 1.75 inches to the foot. Driven by gear and pinion at 17 revolutions per minute and has a life of 385 days or while the mill handles 89,863 tons. Run dry. Handles 647 tons and requires 0.32 horse-power when empty and 2.54 horse-power under normal load. From (3) and (6); delivers oversize to (5) and undersize to (7).

5. F. M. Davis rolls, 16 × 36 inches, making 100 revolutions per minute and set to crush to 0.25 inch. Midvale steel shells weigh, when new, 8,020 pounds, last 175 days or while the mill handles 45,392 tons, and when worn out weigh 1,299 pounds. Latrobe steel shells weigh, when new, 9,012 pounds, last 181 days or while the mill handles 38,684 tons, and when worn out weigh 1,302 pounds. Steel cheek plates weigh, when new, 705 pounds, last 356 days or while the mill handles 84,076 tons, and when worn out weigh 456 pounds. Phosphor-bronze wearing parts weigh, when new, 612 pounds, last 356 days or while the mill handles 84,076 tons, and when worn out weigh 420 pounds. Run dry. Handle 347 tons (270 tons on the first pass and 77 tons returned), and require 7.12 horse-power when empty and 19.27 horse-power under normal load. From (4); deliver crushed ore to (6).

6. Bucket elevator having a speed of 302 feet per minute and buckets,

7 × 12 inches, placed 20 inches apart, which elevate the ore 37 feet. Handles 347 tons and requires 1.78 horse-power when empty and 2.92 horse-power under normal load. From (5); delivers to (4).

7. One 18-inch belt conveyor having a conveying length of 160 feet and a speed of 230 feet per minute. Handles 300 tons and requires 1.85 horse-power when empty and 3.85 horse-power under normal load. From (4); delivers to (8).

Concentrating Department.

This department runs 24 hours daily. The capacities and machine products are given in tons per 24 hours and the water in gallons per minute.

8. Silver Lake mill ore bin of 600 tons capacity. From (7); delivers to (9).

9. Plunger feeder with a 5-inch stroke. Handles 300 tons. For power see (2). From (8); delivers to (10).

The mill feed, at this point, gives the following sizing test:

Through	15	on	9	millimeters	28.0 percent.
"	9	"	6	"	21.0 "
"	6	"	4	"	14.0 "
"	4	"	2	"	12.0 "
"	2			"	25.0 "
Total					100.0 "

10. Vezin sampler making 20 revolutions per minute and cutting out 5.0% of the ore. From (9); delivers sample to (11) and rejects to (12).

11. Vezin sampler with details as in (10). From (10); delivers sample, which amounts to 5 pounds per ton of original ore, to the bucking room and rejects to (12).

12. Bucket elevator having a speed of 350 feet per minute and buckets, 7 × 14 inches, placed 24 inches apart, which elevate the ore 54 feet. Handles 560 tons of ore and 82 gallons of water besides 10 gallons of hydraulic water. Together with (23) requires 3.69 horse-power when empty and 8.58 horse-power under normal load. From (10), (11), (14), and (16); delivers to (13).

13. Two trommels, 3.5 × 6 feet, having 9-millimeter round holes punched, 0.5625 inch between centers, in No. 6 steel, and shafts, 3.1875 inches in diameter, which have slopes of 0.75 inch to the foot. Each has a life of 287 days or while the mill handles 64,936 tons. Run wet. Handle 560 tons of ore with 92 gallons of water in the feed and 34 gallons of hydraulic water. Together with (17), (19), (24), and (27) require 0.93 horse-power when empty and 6.88 horse-power under normal load. Other details as in (4). From (12); deliver oversize, via mixing box, to (14) and undersize to (17).

14. One double 2-compartment Harz jig with sieves having 4-millimeter round holes and plungers making 160 1.75-inch strokes per minute. Handles 200 tons of ore with 40 gallons of water in the feed and 62 gallons of hydraulic water. Requires 1.61 horse-power when empty and, together with (18), (20), (26), (28), (30), and (32), 21.53 horse-power under normal load. The feed gives the following sizing test:

On	9	millimeters	52.99	percent.	On	40	mesh	0.24	percent
"	6	"	38.87	"	"	80	"	0.18	"
"	4	"	6.20	"	"	100	"	0.06	"
"	2	"	0.53	"	"	150	"	0.02	"
"	20	mesh	0.31	"	Through	150	"	0.57	"

From (13); delivers the first side discharges and second hutch products, amounting to 2 tons, as second-class concentrates, to (69); the first hutch products, as first-class concentrates, to (12); and the tailings to (15).

15. Shovel dewatering wheel, making 12 revolutions per minute, handling 264 tons of ore and 172 gallons of water. From (14) and (18); delivers ore to (16) and the overflow, containing 4 tons of ore with 90 gallons of water, to (50).

16. F. M. Davis rolls set to crush to 0.125 inch. Midvale steel shells weigh,

when new, 5,772 pounds, last 178 days or while the mill handles 37,318 tons, and when worn out weigh 838 pounds. Latrobe steel shells weigh, when new, 9,012 pounds, last 185 days or while the mill handles 47,450 tons, and when worn out weigh 1,611 pounds. Steel cheek plates weigh, when new, 588 pounds, last 363 days or while the mill handles 84,768 tons, and when worn out weigh 380 pounds. Phosphor-bronze wearing parts weigh, when new, 510 pounds, last 363 days or while the mill handles 84,768 tons, and when worn out weigh 350 pounds. Run wet. Handle 260 tons of ore and 82 gallons of water and require 7.12 horse-power when empty and 14.37 horse-power under normal load. Other details as in (5). From (15); deliver crushed ore to (12).

17. Two trommels having 6-millimeter round holes punched, 0.375 inch between centers, in No. 10 steel. Each has a life of 340 days or while the mill handles 77,838 tons. Handle 360 tons of ore with 86 gallons of water in the feed and 34 gallons of hydraulic water. For power and other details see (13). From (13); deliver oversize, via mixing box, to (18) and undersize to (19).

18. One double 3-compartment Harz jig. The first and third sieves have 4-millimeter and the second 6-millimeter round holes. The plungers make 176 1.25-inch strokes per minute. Handles 134 tons of ore with 25 gallons of water in the feed and 116 gallons of hydraulic water. Together with (20) and (28) requires 2.32 horse-power when empty. For horse-power under normal load see (14). The feed gives the following sizing test:

On	6 millimeters	30.67	percent.				
"	4 "	56.50	"				
"	2 "	8.70	"	On	80 mesh	0.09	percent.
"	20 mesh	1.02	"	"	100 "	0.02	"
"	40 "	2.44	"	"	150 "	0.00	"
				Through	150 "	0.54	"

From (17); delivers the first side discharges, as first-class concentrates, to (68); the second and third hutch products, as second-class concentrates, to (69); the first hutch products, as first-class concentrates, to (26) and (28); and the tailings to (15) and (21). The products going to (68) and (69) amount to 2 tons.

19. Two trommels having 4-millimeter round holes punched, 0.25 inch between centers, in No. 12 steel. Each has a life of 334 days or while the mill handles 76,283 tons. Handle 226 tons of ore with 95 gallons of water in the feed and 34 gallons of hydraulic water. For power and other details see (13). From (17); deliver oversize, via two mixing boxes, to (20) and undersize to (27).

20. Two double 3-compartment Harz jigs. The first sieves have 6 mesh, 18 wire, the second and third 5-millimeter round holes. The plungers make 216 0.875-inch strokes per minute. Handle 76 tons of ore with 34 gallons of water in the feed and 148 gallons of hydraulic water. For power see (18). The feed gives the following sizing test:

On	4 millimeters	36.11	percent.				
"	2 "	55.17	"				
"	20 mesh	5.58	"	On	80 mesh	0.43	percent.
"	40 "	2.01	"	"	100 "	0.07	"
				"	150 "	0.03	"
				Through	150 "	0.69	"

From (19); deliver the first hutch products, as first-class concentrates, to (30) and (68); the second and third hutch products, as second-class concentrates, to (69); and the tailings to (21). The products going to (68) and (69) amount to 6 tons.

21. Three shovel dewatering wheels, making 12 revolutions per minute, handling 440 tons of ore, with 252 gallons of water from jigs and 66 gallons from trommels. From (18), (20), and (24); deliver 431 tons of ore with 50 gallons of water to (22) and 9 tons of ore with 268 gallons of water to (45).

22. Three F. M. Davis rolls, 14 × 27 inches, making 105 revolutions per minute and set to crush to 0.0625 inch. Midvale steel shells for the 3 rolls

weigh, when new, 11,190 pounds, last 322 days or while the mill handles 73,415 tons, and when worn out weigh 2,113 pounds. Steel cheek plates for the 3 rolls weigh, when new, 438 pounds, last 322 days or while the mill handles 73,415 tons, and when worn out weigh 288 pounds. Cast-brass wearing parts for the 3 rolls weigh, when new, 480 pounds, last 322 days or while the mill handles 73,415 tons, and when worn out weigh 288 pounds. Run wet. Handle 431 tons (127 tons from jigs and 304 tons of returns), with 50 gallons of water, and require 16.10 horse-power when empty and 33.20 horse-power under normal load. From (21); deliver crushed ore to (23).

23. Bucket elevator having a speed of 350 feet per minute and elevating the ore 56 feet. Handles 431 tons of ore with 50 gallons of water. For power see (12). From (22); delivers to (24).

24. Two trommels having 2.5-millimeter round holes punched, 0.1875 inch between centers, in No. 16 steel. Each has a life of 402 days or while the mill handles 94,313 tons. Handle 431 tons of ore with 50 gallons of water in the feed and 34 gallons of hydraulic water. For power and other details see (13). From (23); deliver oversize to (21) and undersize to (25).

25. Two Richards' vortex hydraulic classifiers with two spigots each. For details see (29). From (24); deliver the first spigots to (26), the second spigots to (31), and the overflows to (44).

26. One double 4-compartment Harz jig. The first sieves have 10 mesh, 19 wire, the second and third 2.5-millimeter, and the fourth 2-millimeter round holes. The plungers make 242 0.5625-inch strokes per minute in the first, second, and third compartments, and 0.5-inch strokes in the fourth compartments. Together with (30) handles 138 tons of ore with 75 gallons of water in the feed and 150 gallons of hydraulic water. Together with (30) and (32) requires 9.84 horse-power when empty. For horse-power under normal load see (14). For a sizing test of the feed see (29). From (18) and (25); delivers the first hutch products, as first-class concentrates, to (68); the second, third, and fourth hutch products, as second-class concentrates, to (69); and the tailings to (33). The products going to (68) and (69) from 26 and (30) amount to 6 tons.

27. Two trommels having 2-millimeter round holes punched, 0.1563 inch between centers, in No. 18 steel. Each has a life of 393 days or while the mill handles 92,063 tons. Handle 150 tons of ore with 95 gallons of water in the feed and 34 gallons of hydraulic water. For power and other details see (13). From (19); deliver oversize to (28) and undersize to (29).

28. One double 3-compartment Harz jig. The first sieves have 8 mesh, 18 wire, the second and third 4-millimeter round holes. The plungers make 224 0.75-inch strokes per minute in the first and second compartments and 0.625-inch strokes in the third compartments. Handles 34 tons of ore with 26 gallons of water in the feed and 39 gallons of hydraulic water. For power see (18). The feed gives the following sizing test:

On 2 millimeters	41.15 percent.	On 100 mesh	0.17 percent.
" 20 mesh	47.16 "	" 150 "	0.01 "
" 40 "	9.25 "	Through 150 "	0.87 "
" 80 "	1.39 "		

From (18) and (27); delivers the first hutch products, as first-class concentrates, to (68); the second and third hutch products, as second-class concentrates, to (69); and the tailings to (33). For the amount going to (68) and (69) see (26).

29. Two Richards' vortex hydraulic classifiers with 3 spigots each. Together with (25) handle 243 tons of ore with 121 gallons of water in the feed and 175 gallons of hydraulic water. From (27); deliver the first spigots, via two mixing boxes, to (30); the second spigots to (31); the third spigots, amounting to 10 tons of ore and 21 gallons of water, to three tables in (49); and the

overflows to (46). Together with (25) the first spigots contain 138 tons of ore and 75 gallons of water, the second spigots 18 tons of ore and 6 gallons of water, and the overflows 77 tons of ore and 194 gallons of water. The spigots give the following sizing tests:

	First Spigot. Percent.	Second Spigot. Percent.	Third Spigot. Percent.
On 20 mesh	46.34	3.34	.....
" 40 "	35.19	27.28	1.99
" 80 "	11.50	45.01	33.44
" 100 "	1.52	5.26	10.60
" 150 "	1.62	8.17	9.27
Through 150 "	3.83	10.94	44.70
Totals	100.00	100.00	100.00

30. Two double 4-compartment Harz jigs. The first sieves have 10 mesh, 19 wire, the second and third sieves 2.5-millimeter, and the fourth sieves 2-millimeter round holes. The plungers make 242 0.5625-inch strokes per minute in the first, second, and third compartments and 0.5-inch strokes in the fourth compartments. For details regarding capacities, water quantities, and power see (26). From (20) and (29); deliver the first hutch products, as first-class concentrates, to (68); the second, third, and fourth hutch products, as second-class concentrates to (69); and the tailings to (33). For the amount of products going to (68) and (69) see (26).

31. One 1-spigot classifier. From (25) and (29); delivers spigot, via mixing box, to (32) and overflow to (37).

32. One double 4-compartment Harz jig with sieves of 12 mesh, 20 wire. The plungers make 256 0.375-inch strokes per minute in the first, second, and third compartments and 0.3125-inch strokes in the fourth compartments. Handles 18 tons of ore with 6 gallons of water in the feed and 47 gallons of hydraulic water. For power see (26). From (31); delivers all hutch products, amounting to 2 tons, as second-class concentrates, to (69) and the tailings to (43).

33. Chili mill feed-settling tank handling 164 tons of ore with 290 gallons of water. From (26), (28), and (30); delivers 150 tons of settlings with 68 gallons of water to (34) and the overflow with 14 tons of ore and 222 gallons of water to (37) and (38).

34. Two 6-foot Monadnock Chili mills with bottom drives manufactured by the Trent Engineering & Machinery Company and making 33 revolutions per minute. The Midvale steel ring dies are cemented into place with Portland cement, no lead or babbitt being used, and weigh, when new, 5700 pounds, last 131 days or while the concentrator handles 29,740 tons, and when worn out weigh 980 pounds. The Midvale steel trunnion tires are held on the cores by hard-wood wedges and weigh, when new, 7,968 pounds, last 131 days or while the concentrator handles 29,740 tons, and when worn out weigh 1,654 pounds. The steel wire screens vary from 9 to 20 mesh, 12 and 14 mesh being used for the greater part of the ore. They weigh, when new, 1,415 pounds, last 289 days or while the concentrator handles 64,654 tons, and when worn out weigh 1,186 pounds. Phosphor-bronze wearing parts weigh, when new, 30 pounds, last 365 days or while the concentrator handles 84,363 tons, and when worn out weigh 10 pounds. Cast-iron plows weigh, when new, 228 pounds, last 131 days or while the concentrator handles 29,740 tons, and when worn out weigh 90 pounds. Handle 150 tons of ore with 68 gallons of water and require 17.16 horse-power when empty and 54.98 horse-power under normal loads. From (33); deliver pulp to (35) and (39).

35. Two Richards' vortex hydraulic classifiers with 3 spigots each. Handle

133 tons of ore with 106 gallons of water in the feed and 73 gallons of hydraulic water. From (34), (37), and (43); deliver the first spigots, containing 58 tons of ore with 39 gallons of water, to two tables in (40); the second spigots, containing 32 tons of ore with 35 gallons of water, to two tables in (40); the third spigots, containing 21 tons of ore with 23 gallons of water, to two tables in (40); and the overflows, containing 22 tons of ore with 82 gallons of water, to (36). The spigot products give the following sizing tests:

	First Spigot. Percent.	Second Spigot. Percent.	Third Spigot. Percent.
On 20 mesh	0.49	.....	.....
" 40 "	39.35	19.84	0.86
" 80 "	33.93	47.26	30.91
" 100 "	4.92	12.26	15.19
" 150 "	6.41	5.18	12.83
Through 150 "	15.90	15.45	40.21
Totals	100.00	99.99	100.00

36. Round settling tank handling 22 tons of ore with 82 gallons of water. From (35); delivers spigot, containing 10 tons of ore with 23 gallons of water, to one table in (40) and the overflow, containing 12 tons of ore with 59 gallons of water, to (52). The spigot product gives the following sizing test:

On 80 mesh	5.17 percent.	On 150 mesh	13.58 percent.
" 100 "	12.28 "	Through 150 "	68.97 "

37. Settling tank handling 10 tons of ore with 152 gallons of water. From (31) and (33); delivers spigot product, containing 8 tons of ore with 30 gallons of water, to (35) and overflow, containing 2 tons of ore with 122 gallons of water, to (50).

38. Settling tank handling 4 tons of ore with 70 gallons of water. From (33); delivers spigot product, containing 4 tons of ore with 15 gallons of water, to (39) and overflow, containing 55 gallons of clear water, to (67).

39. One Richards' vortex hydraulic classifier with 3 spigots handling 44 tons of ore with 37 gallons of water in the feed and 46 gallons of hydraulic water. From (34) and (38); delivers the first spigot product, containing 19 tons of ore with 23 gallons of water, to one table in (41); the second spigot product, containing 12 tons of ore with 13 gallons of water, to one table in (41); the third spigot product, containing 7 tons of ore with 10 gallons of water, to one table in (41); and the overflow, containing 6 tons of ore with 37 gallons of water, to (55). The spigot products give the following sizing tests:

	First Spigot. Percent.	Second Spigot. Percent.	Third Spigot. Percent.
On 20 mesh	3.17	.....	.....
" 40 "	44.44	11.99	.....
" 80 "	28.80	43.17	17.99
" 100 "	4.31	11.03	14.22
" 150 "	3.63	6.95	11.72
Through 150 "	15.65	26.86	56.07
Totals	100.00	100.00	100.00

40. Seven Wilfley tables making 246 to 260 throws per minute and, together with (41), (48), (49), (66), and (74), handling 196 tons of ore with 253 gallons of water in the feed and 97 gallons of hydraulic water. From (35) and (36); deliver concentrates, via launder, to (75), middlings to three tables in (42), tailings to (61), and headwaters to (51).

41. Three Wilfley tables with details as in (40). From (39); deliver con-

centrates, via launder, to (75), middlings to two tables in (42), tailings to (61), and headwaters to (47).

42. Twelve Wilfley tables and one Card table. Three of the Wilfleys make 245, two make 250, seven make 260, and the Card makes 260 throws per minute. Handle 63 tons of ore with 124 gallons of water in the feed and 70 gallons of hydraulic water. Require 2.33 horse-power when empty and, together with (48), (49), (60), and (66), 4.29 horse-power under normal feed. From (40), (41), (47), (48), (55), and (58); deliver concentrates, via launder, to (75), tailings to (61), and headwaters to (63).

43. Conical cast-iron settling-tank handling 21 tons of ore with 71 gallons of water. From (32) and (45); delivers spigot, containing 15 tons of ore with 30 gallons of water, to (35) and the overflow, containing 6 tons of ore with 41 gallons of water, to (52).

44. Conical cast-iron settling-tank handling 37 tons of ore with 90 gallons of water. From (25); delivers spigot product, containing 10 tons of ore with 15 gallons of water, to one table in (49) and the overflow, containing 27 tons of ore with 75 gallons of water, to (52). The spigot product gives the following sizing test:

On 40 mesh	1.69 percent.	On 150 mesh	13.50 percent.
" 80 "	21.10 "	Through 150 "	51.90 "
" 100 "	11.81 "		

45. Two conical cast-iron settling-tanks handling 9 tons of ore with 268 gallons of water. From (21); deliver the spigot products, containing 5 tons of ore with 18 gallons of water, to (43) and the overflows, containing 4 tons of ore with 250 gallons of water, to (50).

46. Conical cast-iron settling-tank handling 40 tons of ore with 104 gallons of water. From (29); delivers spigot product, containing 12 tons of ore with 20 gallons of water, to (48) and the overflow, containing 28 tons of ore with 84 gallons of water, to (55). The spigot product gives the following sizing test:

On 80 mesh	21.70 percent.	On 150 mesh	13.21 percent.
" 100 "	15.57 "	Through 150 "	49.53 "

47. Conical cast-iron settling-tank handling 3 tons of ore with 45 gallons of water. From (41); delivers spigot product, containing 3 tons of ore with 16 gallons of water, to four tables in (42) and the overflow, containing 29 gallons of clear water, to (67). The spigot product gives the following sizing test:

On 150 mesh	0.61 percent.	Through 150 mesh	99.39 percent.

48. Two Wilfley tables making 256 throws per minute. For capacity see (40). Together with (49) and (66) require 0.81 horse-power when empty and for power under normal load see (42). From (46); deliver concentrates, via launder, to (75), middlings to one table in (42), and tailings to (61).

49. Four Wilfley tables with details as in (48). For capacity and power see (48). From (29) and (44); deliver concentrates, via launder, to (75), middlings to (58), tailings to (61), and headwaters to (52).

50. Settling tank handling 10 tons of ore with 462 gallons of water. From (15), (37), and (45); delivers spigot product, containing 8 tons of ore with 25 gallons of water, to (58) and the overflow, containing 2 tons of ore with 437 gallons of water, to (67).

51. Settling tank handling 10 tons of ore with 46 gallons of water. From (40); delivers spigot product, containing 6 tons of ore with 18 gallons of water, to (58) and the overflow, containing 4 tons of ore with 28 gallons of water, to (71).

52. Spitzkasten handling 54 tons of ore with 216 gallons of water. From (36), (43), (44), (49), (65), and (66); delivers spigot product, containing 10

tons of ore with 35 gallons of water, to (58) and the overflow, containing 44 tons of ore with 181 gallons of water, to (53) and (54).

53. Spitzkasten handling 22 tons of ore with 95 gallons of water. From (52); delivers spigot product, containing 7 tons of ore (all through 150 mesh) with 14 gallons of water, to two vanners in (60) and the overflow, containing 15 tons of ore with 81 gallons of water, to (59).

54. Spitzkasten handling 22 tons of ore with 86 gallons of water. From (52); delivers spigot product, containing 7 tons of ore (all through 150 mesh) with 8 gallons of water, to one vanner in (60) and the overflow, containing 15 tons of ore with 78 gallons of water, to (59).

55. Spitzkasten handling 34 tons of ore with 121 gallons of water. From (39) and (46); delivers spigot product, containing 6 tons of ore with 15 gallons of water, to four tables in (42) and the overflow, containing 28 tons of ore with 106 gallons of water, to (56) and (57). The spigot product gives the following sizing test:

On 100 mesh	1.06 percent.
On 150 "	9.57 "
Through 150 "	89.37 "

56. Spitzkasten handling 14 tons of ore with 53 gallons of water. From (55); delivers spigot product, containing 4 tons of ore with 13 gallons of water, to two vanners in (60) and the overflow, containing 10 tons of ore with 40 gallons of water, to (63). The spigot product gives the following sizing test:

On 150 mesh.....0.83 percent. Through 150 mesh.....99.17 percent

57. Spitzkasten handling 14 tons of ore with 53 gallons of water. From (55); delivers spigot product, containing 5 tons of ore with 13 gallons of water, to two vanners in (60) and the overflow, containing 9 tons of ore with 40 gallons of water, to (71). The spigot product gives the following sizing test:

On 150 mesh.....0.54 percent. Through 150 mesh.....99.46 percent.

58. One Richards' vortex hydraulic classifier with 4 spigots handling 30 tons of ore with 90 gallons of water. From (49), (50), (51), and (52); delivers the first spigot, containing 11 tons of ore with 28 gallons of water, the second spigot, containing 5 tons of ore with 15 gallons of water, and the third spigot, containing 4 tons of ore with 13 gallons of water, to four tables in (42); the fourth spigot, containing 2 tons of ore with 8 gallons of water, to one vanner in (60); and the overflow, containing 8 tons of ore with 26 gallons of water, to (59). The spigot products give the following sizing tests:

	First Spigot. Percent.	Second Spigot. Percent.	Third Spigot. Percent.	Fourth Spigot. Percent.
On 80 mesh	25.00	12.31	.....	.....
" 100 "	7.35	4.61	4.65	.....
" 150 "	57.35	10.77	6.98	4.55
Through 150 "	10.30	72.31	88.37	95.45
Totals	100.00	100.00	100.00	100.00

59. Canvas-feed settling-cone handling 38 tons of ore with 185 gallons of water. From (53), (54), and (58); delivers spigot product, containing 26 tons of ore with 108 gallons of water, to (62) and overflow, containing 12 tons of ore with 77 gallons of water, to (63).

60. Eight 6-foot vanners making 182 thrusts per minute, handling 25 tons of ore with 56 gallons of water in the feed and 12 gallons of hydraulic water. Five of them require 0.79 horse-power when empty. For power under normal load see (42). From (53), (54), (56), (57), and (58); deliver concentrates, via launder, to (75) and tailings to (63).

61. Eighteen canvas tables, 11.5 feet wide by 12 feet long, made of 18-ounce duck and having slopes of 3 inches to the foot. Together with (62) and (63) handle 230 tons of ore with 413 gallons of water in the feed and 20 gallons of hydraulic water. From (40), (41), (42), (48), (49), and (66); deliver second-class concentrates to (64) and tailings to (67).

62. Sixteen canvas tables, 11.5 feet wide by 17 feet long, made of 18-ounce duck and having slopes of 1.75 inches to the foot. For capacity see (61). From (59); deliver second-class concentrates to (64) and tailings to (67).

63. Thirty-four canvas tables. Eighteen are 17 feet long and 16 are 19 feet long. All are 11.5 feet wide. Made of 18-ounce duck and having slopes of 1 inch to the foot. For capacity see (61). From (42), (56), (59), and (60); deliver second-class concentrates to (64) and tailings to (67).

64. One Latta and Martin pneumatic displacement pump handling 5 tons of ore with 37 gallons of water per minute against a head of 76 feet. From (61). (62), and (63); delivers to (65).

65. Two canvas re-dress settling-cones arranged in series. The first handles 5 tons of ore with 37 gallons of water. From (64); delivers the spigot product, containing one ton of ore with 15 gallons of water, to (66) and the overflow, containing 4 tons of ore with 22 gallons of water, to the second. The second delivers the spigot product, containing 3 tons of ore with 12 gallons of water, to (66), and the overflow, containing 1 ton with 10 gallons of water, to (52). The spigot products give the following sizing tests:

	First Spigot. Percent.	Second Spigot. Percent.
On 80 mesh	9.52	
" 100 "	4.76	0.40
" 150 "	11.91	0.80
Through 150 "	73.81	98.80
Totals	100.00	100.00

66. Two Wilfley tables making 264 throws per minute. Only one used. For capacity see (40). For power see (48). From (65); deliver concentrates, via launder, to (75); middlings to (52); tailings to (61); and headwaters to (52).

67. Automatic tailings sampler. From (38), (47), (50), (61), (62), and (63); delivers sample to assayer and reject, via tailings launder, to waste dump.

68. Eight first-class concentrates bins each having a capacity of 24 tons. Together with (69), (70), and (75) handle 60 tons of concentrates with 50 gallons of water and 40 gallons of wash water. From (18), (20), (26), (28), and (30); deliver concentrates, via cars, to smelter and drainings to (70).

69. Twelve second-class concentrates bins each having a capacity of 42 tons. For amount handled see (68). From (14), (18), (20), (26), (28), (30), and (32); deliver concentrates, via cars, to smelter, and drainings to (70).

70. Eight settling tanks, four of 12 tons capacity each and four of 18 tons capacity each. Steam coils in bottoms. For amount handled see (68). From (68) and (69); deliver dry concentrates, via cars, to smelter and overflows, via launder, to waste.

71. Four slimes-settling tanks with steam coils in the bottoms. One is 35 feet long by 14 feet wide by 26 feet deep, another is $30 \times 16 \times 26$ feet, another is $30 \times 12 \times 26$ feet, and the fourth is $16 \times 16 \times 26$ feet. Handle 13 tons of ore with 68 gallons of water in the feed and 25 gallons of hydraulic water. From (51) and (57); deliver settlings to (72) and overflows, via launder, to waste.

72. One 4-foot Frenier sand pump lifting against a head of 24 feet. From (71); delivers to (73) and (74).

73. One vanner making 190 throws per minute. From (72); delivers concentrates, via launder, to (75) and tailings, via launder, to waste.

74. One Wilfley table making 265 throws per minute. For capacity see (40). From (72); delivers concentrates, via launder, to (75) and tailings, via launder, to waste.

75. Bins for table and vanner concentrates. For amount handled see (68). From (40), (41), (42), (48), (49), (60), (66), (73), and (74); deliver concentrates, via cars, to smelter.

The mill concentrates about 4.5 tons into 1 and saves 88% of the gold, 79% of the silver, 84% of the lead, and 79% of the copper.

Of the total ore milled 215.67% passes to (4), 188.0% to (13), 120.0% to (17), 75.33% to (19), 143.67% to (24), and 50.0% to (27).

Of the total ore milled 115.67% passes to (5), 86.67% to (16), 48.0% to (22), and 50.0% to (34).

Power and Water.

Only General Electric induction motors are used. All are type I, 3-phase, 60-cycle machines using an alternating current.

The following list shows a summary of the same:

Motor Operating.	Number.	Forms	Amperes.	Volts.	Revolutions per Minute.	Horse-power.	
						Rated.	Operating.
(2), (3), and (9)	1	L.	125.0	220	720	50	36.25
(4), (5), (6), and (7)	1	K.	125.0	220	900	50	34.57
(12), (13), (14), (16), (17), (18), (19), (20), (23), (24), (26), (27), (28), (30), and (32)	1	L.	22.8	2,080	720	85	61.69
(22) and (34)	1	K.	33.5	2,080	600	125	98.90
(42), (48), (49), (60), and (66)	1	L.	87.5	220	600	35	10.67
Compressors	1	C.	37.5	220	900	15	17.43
Slimes plant	2					4	3.00
Totals	8					364	262.51

The following table gives a summary of the water used in gallons per minute:

Original feed water (12)	10
Trommels (13), (17), (19), (24), and (27)	170
Jig (14)	62
" (18)	116
Jigs (20)	148
" (26) and (30)	150
" (28)	39
Jig (32)	47
Hydraulic classifiers (25) and (29)	175
" " (35) " (39)	119
Tables (40), (41), (42,) (48), (49), (66), and (74)	167
Vanners (60)	12
Wash water for canvas tables (61), (62), and (63)	20
Wash water for concentrates (68)	40
Wash water for slimes plant and miscellaneous (71)	25
Total	1,300

K. MILLS SAVING LEAD AND ZINC VALUES.

Mill 145 serves as a representative of this class.

§ 1477. MILL NO. 145. ORE DRESSING PLANT OF THE MINES DE PIERREFITTE, PIERREFITTE, NESTALAS, HAUTES PYRENEES, FRANCE. — The capacity of this mill is 150 tons per 24 hours.[83] The economic minerals are galena and sphalerite. Clean sphalerite and galena are separated in the mine and sent to shipping bins outside the mill, while the crude milling ore, running 9.08% lead and 15.4% zinc, is sent to (1).

Rock House.

1. Breaker. From Estaing shaft; delivers to (2).

2. Trommel. From (1); delivers oversize to (3) and undersize to (4).

3. Picking belt. From (2); delivers waste rock to dump and milling ore to (4). The rock house is run during a 10-hour day shift only.

Concentrating Plant.

4. Grizzly with 50-millimeter spaces between the bars. From (2) and (3); delivers oversize to (14) and undersize to (5).

5. Ore bin of about 60 tons capacity. From (4); delivers, via feeder, to (6).

6. Conical trommel, 2.2 meters long by 1 and 1.3 meters in diameter, with holes 25 millimeters in diameter. Run wet. From (5); delivers oversize to (7) and undersize, via launder, to (9).

7. Picking belt. From (6); delivers waste rock to dump and milling ore to (8).

8. Ore bin. From (7) and (16); delivers, via percussion feeder, to (17).

9. Conical trommel with 3 screening sections, having holes 6, 10, and 18 millimeters in diameter. Trommel is 3 meters long by 1 and 1.3 meters in diameter. From (6); delivers material between 18 and 25 millimeters to (17), material between 10 and 18 millimeters to (13), material between 6 and 10 millimeters to (13), and material through 6 millimeters to (10).

10. Trommel 1 × 3 meters, with holes 2 and 3.5 millimeters in diameter. From (9); delivers material between 3.5 and 6 millimeters to (13), material between 2 and 3.5 millimeters to (13), and material through 2 millimeters to (11).

11. Trommel with holes 1 millimeter in diameter. From (10); delivers oversize to (13) and undersize to (12).

12. Spitzlutte. From (11); delivers spigots to (13) and overflow to (35).

13. Six jigs. One has three compartments and the others have five compartments. From (9), (10), (11), and (12); deliver galena to market, sphalerite to market, rich middlings to (27), poor middlings to (14), and tailings to waste.

14. Ore bin. From (4) and (13); delivers, via percussion feeder, to (15).

15. Conical trommel, 2.2 meters long by 1 and 1.3 meters in diameter, with holes 25 millimeters in diameter. Run dry. From (14); delivers oversize on top of undersize onto (16).

16. Picking belt. From (15); delivers waste rock to dump and milling ore to (8).

17. Rolls, 0.32 × 0.95 meter. From (8), (9), and (18); deliver crushed ore to (18).

18. Conical trommel with three screening sections having holes 5, 8, and 12 millimeters in diameter. Trommel is 3 meters long by 1 and 1.3 meters in diameter. From (17); delivers material on 12 millimeters to (17), material between 8 and 12 millimeters to (22), material between 5 and 8 millimeters to (22), and material through 5 millimeters to (19).

19. Trommel, 1 × 3 meters, with holes 2 and 3 millimeters in diameter. From (18) and (25); delivers material between 3 and 5 millimeters to (22), material between 2 and 3 millimeters to (22), and material through 2 millimeters to (20).

20. Trommel with holes 1 millimeter in diameter. From (19); delivers oversize to (22) and undersize to (21).

21. Spitzlutte. From (20) and (26); delivers spigots to (22) and overflow to (35).

22. Eight 4-compartment jigs. From (18), (19), (20), and (21); deliver galena to market, sphalerite to market, rich middlings to (27), poor middlings to (23), and tailings to waste.

23. Elevator. From (22) and (34); delivers to (24).

24. Two ore bins. From (23); deliver material between 3 and 8 millimeters to (25) and material through 3 millimeters to (26).

25. Rolls, 0.3 × 0.7 meter. From (24); deliver, via launder, to (19).

26. No. 3 Heberle wet ball mill. From (24); delivers pulp, via launder, to (21).

27. Elevator. From (13), (22), (31), and (34); delivers to (28).

28. Two ore bins. From (27); deliver material between 3 and 8 millimeters, via percussion feeder, to (29) and material below 3 millimeters to (30).

29. No. 4 Heberle wet ball mill, 0.7 × 1.8 meters. From (28); delivers pulp to (31).

30. Rolls, 0.3 × 0.7 meter. From (28); deliver crushed ore to (31).

31. Trommel, 1 × 2.2 meters, with holes 2 millimeters in diameter. From (29) and (30); delivers oversize to (27) and undersize to (32).

32. Trommel, 1 × 2.2 meters, with holes 1 millimeter in diameter. From (31); delivers oversize to (34) and undersize to (33).

33. Spitzlutte. From (32); delivers spigots to (34) and overflow to (39).

34. Two 3-compartment jigs. From (32) and (33); deliver concentrates to market, rich middlings to (27), poor middlings to (23), and tailings to waste.

35. Four Spitzlutten. From (12) and (21); deliver spigots to (37) and overflows to (36).

36. Two Spitzkasten. From (35); deliver spigot to (37) and overflows to waste.

37. Pulp thickeners. From (35) and (36); deliver pulp to (38) and overflows to waste.

38. Nine Ferraris tables. From (37); deliver concentrates to market, rich middlings to (41), poor middlings to (45), and tailings to waste.

39. Three Spitzlutten and a Spitzkasten. From (33); deliver spigots to (40) and overflows to waste.

40. Three Ferraris tables. From (39); deliver concentrates to market, rich middlings to (41), poor middlings to (45), and tailings to waste.

41. Two Spitzlutten and a Spitzkasten. From (38), (40), and (44); deliver spigots to (42) and overflows to waste.

42. Pulp thickeners. From (41); deliver spigots to (43) and overflows to waste.

43. Four Ferraris tables. From (42); deliver concentrates to market, middlings to (44), and tailings to waste.

44. Centrifugal pump. From (43); delivers to (41).

45. Two Spitzlutten and a Spitzkasten. From (38), (40), and (47); deliver spigots to (46) and overflows to waste.

46. Three Ferraris tables. From (45); deliver concentrates to market, middlings to (47), and tailings to waste.

47. Centrifugal pump. From (46); delivers to (45).

A saving of 74.3% of the lead and 74.7% of the zinc is obtained. The lead concentrates carry 73.5% lead and 15.1% zinc, and the zinc product 3.9% lead and 42.8% zinc.

Power.

The actual consumption is about 145 horse-power distributed as follows:

An 18 horse-power motor drives the breaker (1) and trommel (2).

A 30 horse-power motor and a 40 horse-power motor drive rolls (17), (25), and (30), ball mills (26) and (29), and picking belts (3), (7), and (16).

Two 18 horse-power motors drive jigs (13), (22), and (34), and trommels (6), (9), (10), (11), (15), (18), (19), (20), (31), and (32).

Two 18 horse-power motors drive tables (38), (40), (43), and (46), and centrifugal pumps (44) and (47).

L. MILLS SAVING LEAD, ZINC, AND IRON VALUES.

Mills 146, 147, and 148 are given to illustrate this group and are taken from three districts.

§ 1478. MILL NO. 146. GALENA AND SPHALERITE DRESSING PLANT NEUE HELENE MINE, HOHENLOHE WERKE, UPPER SILESIA. — This plant has a capacity of 280 tons per 10 hours.[83] The economic minerals are pyrite, sphalerite, and galena disseminated in a dolomite gangue. The ore is clayey and contains 22% zinc, 5.77% lead, and the pyrite varies from 0 to 7%.

The ore from the mine is delivered, via trucks, to (1) on the top floor of the mill building.

Crushing and Jigging Department.

There are two similar sections under this heading, only one of which is described.

1. Hand tumbler. From the mine; delivers to (2).

2. Grizzly, 1 × 1.5 meters, with 120-millimeter spaces between the bars. From (1); delivers oversize to (3) and undersize to (4).

3. Breaker with a jaw opening 0.32 × 0.5 meter. From (2); delivers to (4).

4. Bin. From (2) and (3); delivers, via push feeder, to (5).

5. Washing trommel, 3.5 × 2.2 meters. From (4); delivers to (6).

6. Conical trommel, 2.5 × 1 and 1.35 meters, with two screening sections having holes 22 and 50 millimeters in diameter respectively. From (5); delivers oversize on 50 millimeters to (7), material between 22 and 50 millimeters to (8), and material through 22 millimeters to (9).

7. Picking table, 7 meters in diameter. From (6); delivers waste rock to dump and milling ore to (19).

8. Picking table, 7 meters in diameter. From (6) and (24); delivers waste rock to dump and milling ore, via percussion feeder, to (20).

9. Conical trommel, 3 × 1.3 and 1.42 meters, with three screening sections having holes 9, 12, and 15 millimeters in diameter respectively. From (6); delivers material on 15 millimeters and material between 12 and 15 millimeters to (14), material between 9 and 12 millimeters to (15), and material through 9 millimeters to (10).

10. Two conical trommels, 3 × 1 and 1.42 meters, with four screening sections having holes 3, 4, 5, and 7 millimeters in diameter respectively. From (9); deliver the four sizes coarser than 3 millimeters to (15) and material through 3 millimeters to (11).

11. Two conical trommels, 2.2 × 1 and 1.3 meters with holes 2 millimeters in diameter. From (10); deliver oversize to (15) and undersize to (12).

12. Two conical trommels, 2.2 × 1 and 1.3 meters with holes 1.5 millimeters in diameter. From (11); deliver oversize to (15) and undersize to (13).

13. Four Spitzlutten arranged in series. From (12); deliver spigots to (15) and overflow to (40).

14. Two 3-compartment jigs. From (9); deliver rich middlings of galena-sphalerite to (18), rich galena-dolomite middlings to (18), poor galena-dolomite middlings to (18), and tailings to (17).

15. Sixteen 5-compartment jigs. From (9), (10), (11), (12), and (13); deliver galena concentrates to (16), rich galena-sphalerite middlings to (18),

sphalerite to (16), rich sphalerite-dolomite middlings to (18), poor sphalerite-dolomite middlings to (18), and tailings to (17).

16. Hoist. From (15), (17), (32), (39), (42), (46), (51), (55), (58), (62), and (67); delivers concentrates to storage and tailings to dump.

17. Two dewatering sand wheels. From (14), (15), (31), (32), and (39); deliver solids to (16) and slime water to (64).

18. Hoist. From (14), (15), (31), (32), and (39); delivers rich galena-sphalerite, rich galena-dolomite, and rich sphalerite-dolomite middlings coarser than 6 millimeters to (33) and finer than 6 millimeters to (34); poor galena-dolomite and poor sphalerite-dolomite middlings coarser than 6 millimeters to (21) and finer than 6 millimeters to (22).

19. Breaker with 0.25 × 0.4 meter jaw opening. From (7); delivers crushed ore to (23).

20. Coarse rolls, 0.32 × 0.95 meter. From (8) and (24); deliver crushed ore to (23).

21. Medium rolls, 0.32 × 0.95 meter, handling material larger than 6 millimeters. From (18); deliver crushed ore to (23).

22. High-speed rolls, 0.165 × 1.2 meters, handling material through 6 millimeters. From (18); deliver crushed ore to (23).

23. Bucket elevator. From (19), (20), (21), and (22); delivers to (24).

24. Conical trommel, 3 × 1 and 1.42 meters, with two screening sections having holes 15 and 22 millimeters in diameter respectively. From (23); delivers material on 22 millimeters to (8); material between 15 and 22 millimeters, via percussion feeder, to (20); and material through 15 millimeters to (25).

25. Conical trommel, 3 × 1 and 1.42 meters, with two screening sections having holes 9 and 12 millimeters in diameter respectively. From (24); delivers material on 12 millimeters to (31); material between 9 and 12 millimeters to (32), and material through 9 millimeters to (26).

26. Conical trommel, 3 × 1 and 1.42 meters, with two screening sections having holes 5 and 7 millimeters in diameter respectively. From (25); deliver material on 7 millimeters and material between 5 and 7 millimeters to (32) and material through 5 millimeters to (27).

27. Conical trommel, 3 × 1 and 1.42 meters, with two screening sections having holes 3 and 4 millimeters in diameter respectively. From (26); delivers material on 4 millimeters and material between 3 and 4 millimeters to (32) and material through 3 millimeters to (28).

28. Conical trommel, 2.2 × 1 and 1.3 meters, with holes 2 millimeters in diameter. From (27); delivers oversize to (32) and undersize to (29).

29. Conical trommel, 2.2 × 1 and 1.3 meters, with holes 1.5 millimeters in diameter. From (28); delivers oversize to (32) and undersize to (30).

30. Two Spitzlutten arranged in series. From (29); deliver spigots to (32) and overflow to (50).

31. One 3-compartment jig. From (25); delivers rich galena-sphalerite middlings to (18), rich galena-dolomite middlings to (18), poor galena-dolomite middlings to (18), and tailings to (17).

32. Nine 5-compartment jigs. From (25), (26), (27), (28), (29), and (30); deliver galena to (16), galena-sphalerite middlings to (18), sphalerite to (16), rich sphalerite-dolomite middlings to (18), poor sphalerite-dolomite middlings to (18), and tailings to (17).

From this point on there is but one section.

33. Medium rolls, 0.32 × 0.95 meter, handling material larger than 6 millimeters. From (18); deliver crushed ore to (35).

34. High-speed rolls, handling material through 6 millimeters. From (18) and (36); deliver crushed ore to (35).

35. Bucket elevator. From (33) and (34); delivers to (36).

36. Conical trommel, 2.2 × 1 and 1.3 meters, with holes 5 millimeters in diameter. From (35); delivers oversize to (34) and undersize to (37).

37. Four conical trommels, 2.2 × 1 and 1.3 meters, arranged in series, with screens having holes 4, 3, 2, and 1.5 millimeters in diameter respectively. From (36); deliver the four sizes coarser than 1.5 millimeters to (39) and material through 1.5 millimeters to (38).

38. Two Spitzlutten arranged in series. From (37); deliver spigots to (39) and overflow to (56).

39. Six 5-compartment jigs. From (37) and (38); deliver galena to (16), galena-sphalerite to (18), rich sphalerite-dolomite middlings to (18), poor sphalerite-dolomite middlings to (18), and tailings to (17).

Table Department.

40. Spitzkasten. From (13); delivers spigot to (41) and overflow to (43).

41. Two Spitzlutten and a Spitzkasten arranged in series. From (40); deliver spigots to (42) and overflow to (43).

42. Six Ferraris tables. From (41); deliver concentrates to (16), poor middlings to (47), rich middlings to (48), and tailings to dump.

43. Pulp thickener. From (40) and (41); delivers spigots to (44) and overflow to (64).

44. Centrifugal pump. From (43); delivers to (45).

45. Spitzkasten. From (44); delivers spigots to (46) and overflow to (64).

46. Two Linkenbach tables. From (45); deliver concentrates to (16), poor middlings to (47), rich middlings to (48), and tailings to dump.

47. Centrifugal pump. From (42), (46), (51), (55), (58), (62), and (67); delivers to (49).

48. Centrifugal pump. From (42), (46), (51), (55), (58), (62), and (67); delivers to (56).

49. Spitzkasten. From (47); delivers spigot to (50) and overflow to (52).

50. Two Spitzlutten and a Spitzkasten arranged in series. From (30) and (49); deliver spigots to (51) and overflow to (52).

51. Six Ferraris tables. From (50); deliver concentrates to (16), poor middlings to (47), rich middlings to (48), and tailings to dump.

52. Pulp thickener. From (49) and (50); delivers spigot to (53) and overflow to (64).

53. Centrifugal pump. From (52); delivers to (54).

54. Spitzkasten. From (53); delivers spigot to (55) and overflow to (64).

55. Linkenbach table, 8 meters in diameter. From (54); delivers concentrates to (16), poor middlings to (47), rich middlings to (48), and tailings to dump.

56. Spitzkasten. From (38) and (48); delivers spigot to (57) and overflow to (59).

57. Spitzlutte and Spitzkasten arranged in series. From (56); deliver spigots to (58) and overflow to (59).

58. Four Ferraris tables. From (57); deliver concentrates to (16), poor middlings to (47), rich middlings to (48), and tailings to dump.

59. Pulp thickener. From (56) and (57); delivers spigot to (60) and overflow to (64).

60. Centrifugal pump. From (59); delivers to (61).

61. Spitzkasten. From (60); delivers spigots to (62) and overflow to (64).

62. Linkenbach tables. From (61); deliver concentrates to (16), poor middlings to (47), rich middlings to (48), and tailings to dump.

63. Concrete Spitzkasten, 5.5 × 35.5 meters. From (64); delivers spigots to (65) and overflow to waste.

64. Centrifugal pump. From (17), (43), (45), (52), (54), (59), and (61); delivers to (63).

65. Centrifugal pump. From (63); delivers to (66).

66. Spitzlutte and a Spitzkasten arranged in series. From (65); delivers spigots to (67) and overflow to waste.

67. Four Ferraris tables. From (66); deliver concentrates to (16), poor middlings to (47), rich middlings to (48), and tailings to dump.

Products which may contain pyrite are re-jigged on three 3-compartment jigs.

Seventy-six percent of the total zinc in the crude ore is recovered.

The different zinc products assay as follows:

Coarse jig concentrates	.....	53 percent zinc
Medium " "	.....	44 " "
Fine " "	.....	38 " "
Table concentrates	.....	28 " "

None of the above products carry over 2% lead.

The following help is employed: 1 foreman, 1 electrician, 4 inspectors, 6 mechanics, 39 workmen over 20 years of age, 17 workmen between 16 and 20 years of age, and 51 boys under 16 years of age.

Three thousand four hundred and fifty to 3,550 gallons of water per minute are used.

The operation of the mill requires about 450 horse-power. The following motors are used:

One 300 horse-power motor and one 250 horse-power motor to drive the machinery in the crushing and jigging departments.

One 50 horse-power motor to drive the Ferraris tables.

One 40 horse-power motor to drive the Linkenbach tables.

Two 20 horse-power motors to operate the hoists.

§ 1479. MILL NO. 147. NEW CENTRAL MILL OF THE AKTIEN COMPANY, VIELLE MONTAGNE, AACHEN, PRUSSIA. — This mill has a capacity of 110 tons per 10 hours.[126] The ores treated come from four different mines and possess such different characteristics that they are each run separately in the mill. The ores in general are alike in being very clayey and in that three sulphides, galena, pyrite, and sphalerite, exist in varying quantities. One of the most important ores is made up as follows: ZnS, 32.65%; PbS, 4.22%; FeS, 21.29%; Fe_2O_3, 6.22%; and a gangue consisting of clay, shale, limestone, calcite, and dolomite.

The problem is: (1). To recover as much clean sphalerite as possible. (2). To avoid making a middling product of sphalerite-pyrite. (3). To recover as much clean pyrite as possible. (4). To recover as much clean galena as possible. The problem is greatly complicated by the fact that a large part of the pyrite is extremely porous so that its specific gravity is lowered nearly to that of the sphalerite, which latter is of the fibrous variety and much interlaced with galena. The clay of the gangue having a tendency to adhere to the particles of sphalerite and galena still further complicates matters.

Ore from the mine, hauled in tram cars to the third or upper mill floor, is dumped to (1).

1. Grizzly with 100-millimeter spaces between the bars. From the tram cars; delivers oversize to (2) and undersize to (3).

2. Picking table. From (1); delivers pyrite-sphalerite to (4), spalling ore to (5), and gangue to (125).

3. Twenty-ton storage bin. From (1); delivers, via feeder, to (6).

4. Dodge-type rock breaker with a jaw opening of 300 by 500 millimeters. From (2), (5), (9), and (17); delivers material crushed to 40 millimeters to (7).

5. Spalling floor. From (2) and (9); delivers gangue to (125), poor sphalerite to (121), calamine to (122), sphalerite to (123), pyrite to (124), pyrite-sphalerite to (4), and limestone-sphalerite with galena-sphalerite to (8).

6. Trommel with 50-millimeter punched holes. Spray water is used. From (3); delivers oversize to (9) and undersize to (10).

7. Trommel with two screening sections having 16 and 9-millimeter punched holes respectively. From (4) and (17); delivers oversize between 40 and 16 millimeters to (11), oversize between 16 and 9 millimeters to (13), and undersize between 9 and 0 millimeter to (38).

8. Storage bin outside of washing plant. From (5), (9), (11), (19), and (22); delivers periodically to (14).

9. Picking table, 4 meters in diameter. From (6); delivers spalling ore to (5), gangue to (125), poor sphalerite to (121), calamine to (122), sphalerite to (123), pyrite to (124), pyrite-sphalerite to (4), limestone-sphalerite with galena-sphalerite to (8), and clay balls to (10).

10. Crickboom log washer. From (6) and (9); delivers to (18).

11. Picking table, 5 meters in diameter. From (7); delivers galena to (120), pyrite to (124), sphalerite to (123), pyrite-sphalerite to (12), and limestone-sphalerite with galena-sphalerite to (8).

12. Coarse rolls, belted, 250 × 700 millimeters. From (11) and (34); deliver crushed ore to (38).

13. Medium rolls, belted, 250 × 700 millimeters. From (7) and (34); deliver crushed ore to (38).

14. Bin for sphalerite-pyrite. From (8), (19), and (22); delivers to (15).

15. Elevator. From (14); delivers to (16).

16. Storage bin. From (15); delivers, via feeder, to (17).

17. Trommel with 40-millimeter punched holes. From (16); delivers oversize to (4) and undersize to (7).

18. Trommel with two screening sections having 22 and 16-millimeter punched holes respectively. From (10); delivers oversize between 50 and 22 millimeters to 19, oversize between 22 and 16 millimeters to (20), and undersize between 16 and 0 millimeter to (21).

19. Picking table, 5 meters in diameter. From (18); delivers limestone-sphalerite with galena-sphalerite to (8), sphalerite-pyrite to (14), pyrite to (124), sphalerite to (123), galena to (120), calamine to (122), poor sphalerite to (121), and gangue to (125).

20. Roughing jigs. From (18); deliver first and second discharges to (22) and overflows to (23).

21. Pulp thickener. From (18); delivers spigot to (24) and overflow to (55).

22. Picking table, 5 meters in diameter. From (20); delivers calamine to (122), pyrite to (124), sphalerite to (123), galena to (120), poor sphalerite to (121), pyrite-sphalerite to (14), and limestone-sphalerite with galena-sphalerite to (8).

23. Picking table, 3 meters in diameter. From (20); delivers calamine to (122), poor sphalerite to (121), and gangue to (125).

24. Elevator. From (21), (46), (47), and (61); delivers to (25).

25. Trommel with two screening sections having 14.2 and 5.8-millimeter punched holes respectively. From (24); delivers oversize between 16 and 14.2 millimeters to (29), oversize between 14.2 and 5.8 millimeters to (26), and undersize between 5.8 and 0 millimeter to (27).

26. Three trommels with two screening sections each. The first has 12.5

and 10.9, the second 9.4 and 9.1, and the third 6.9 and 5.8-millimeter punched holes. From (25); deliver oversize between 14.2 and 12.5 millimeters to (29), oversize between 12.5 and 9.4 millimeters to (30), oversize between 9.4 and 5.8 millimeters to (31), and undersize between 5.8 and 0 millimeter to (27).

27. Three trommels with two screening sections each. The first has 4.8 and 3.9, the second 3.1 and 2.4, and the third 1.8 and 1.25-millimeter punched holes. From (25) and (26); deliver oversize between 5.8 and 3.1 millimeters to (31), oversize between 3.1 and 1.25 millimeters to (32), and undersize between 1.25 and 0 millimeters to (28).

28. Classifier with 3 spigots. From (27); delivers spigots to (32) and overflow to (55).

29. Two 5-compartment jigs with crank motion. From (25) and (26); deliver galena from first and second discharges to (120), fine middlings, as third discharges, to (33); sphalerite, as fourth discharges, to (123); middlings, as fifth discharges, to (47); and overflows to (49).

30. Two 5-compartment jigs with crank motion. From (26); deliver first discharges, sometimes galena, to (120) and, sometimes middlings, to (47); second and third discharges of fine middlings to (33); fourth discharges of sphalerite to (123); fifth discharges of middlings to (47); and overflows to (49).

31. Six 5-compartment jigs. The first two have crank and the rest plain eccentric motions. From (26) and (27); deliver first discharges of galena to (120); second and fifth discharges of middlings to (47); third discharges of sphalerite-pyrite to (38); fourth discharges of sphalerite to (123); and overflows to (49).

32. Six 5-compartment jigs with eccentric motions. From (27) and (28); deliver first hutches of galena to (120), second and fifth hutches of middlings to (47), third hutches of pyrite-sphalerite to (38), fourth hutches of sphalerite to (123), overflows from first two jigs to (49), and overflows from last four jigs to (102).

33. Elevator. From (29), (30), (39), (42), and (47); delivers to (34).

34. Trommel with three screening sections having 16.9 and 4-millimeter punched holes respectively. From (33); delivers oversize on 16 millimeters to (12), oversize between 16 and 9 millimeters to (13), oversize between 9 and 4 millimeters to (35), and undersize between 4 and 0 millimeter to (36).

35. Fine rolls, belted, 250 × 700 millimeters. From (34); deliver crushed ore to (38).

36. Pulp thickener. From (34); delivers spigot to (37) and overflow to (104).

37. Huntington mill, 1.54 meters in diameter and crushing through a 1-millimeter screen. From (36); delivers pulp to (38).

38. Elevator. From (7), (12), (13), (31), (32), (35), (37), and (47); delivers to (39).

39. Trommel with two screening sections having 9 and 2.8-millimeter punched holes respectively. From (38); delivers oversize on 9 millimeters to (33), oversize between 9 and 2.8 millimeters to (40), and undersize between 2.8 and 0 millimeter to (41).

40. Two trommels with two screening sections each. The first has 6.2 and 5 and the second 3.8 and 2.8-millimeter punched holes. From (39); deliver oversize between 9 and 5 millimeters to (42), oversize between 5 and 2.8 millimeters to (43), and undersize between 2.8 and 0 millimeter to (41).

41. Trommel with two screening sections having 2 and 1.4-millimeter punched holes. From (39) and (40); delivers oversize between 2.8 and 1.4 millimeters to (44) and undersize between 1.4 and 0 millimeter to (45).

42. Two 5-compartment jigs. From (40); deliver first discharge of galena

to (120), second and fifth discharges of middlings to (47), third discharges of fine middlings to (33), fourth discharges of sphalerite to (123), and overflows to (49).

43. Two 5-compartment jigs. From (40); deliver first discharges of galena to (120); second and fourth discharges of middlings to (47); third discharges of, sometimes pyrite, to (124) and, sometimes middlings, to (47); fifth discharges of sphalerite to (123); and overflows to (46).

44. Six 5-compartment jigs. From (41) and (45); deliver first hutches of galena to (120), second and fourth hutches of middlings to (47), third hutches of pyrite to (124), fifth hutches of sphalerite to (123), overflow from first jig to (46), and overflows from last 5 jigs to (103).

45. Classifier with 4 spigots. From (41); delivers spigots to (44) and overflow to (52).

46. Spitzlutte. From (43) and (44); delivers spigot to (24) and overflow to (103).

47. Six 3-compartment and four 4-compartment jigs. From (29), (30), (31), (32), (42), (43), and (44) via launder; deliver first hutches to proper shipping bin, second hutches of middlings to (33), third hutches from the 4-compartment jigs, of sphalerite, to (48), overflows from 3-compartment jigs to (49), and overflows from 4-compartment jigs either to (24) or (38).

48. Special settling tank. From (47); delivers sphalerite to (123) and overflow to (104).

49. Pulp thickener. From (29), (30), (31), (32), (42), and (47); delivers spigot to (50) and overflow to (101).

50. Sump. From (49); delivers to (51).

51. Elevator. From (50); delivers to waste dump.

52. Spitzkasten. From (45); delivers spigot to (53) and overflow to (114).

53. Pointed box. From (52); delivers spigot to (54) and overflow to (106).

54. Four Bilharz tables. From (53); deliver galena to (97), galena-pyrite to (67), pyrite-sphalerite to (77), sphalerite to (99), sphalerite middlings to (82), and middlings to (87).

55. Spitzkasten. From (21), (28), (59), and (61); delivers spigot to (56) and overflow to (113).

56. Pointed box. From (55); delivers spigot to (57) and overflow to (105).

57. Twelve Bilharz tables. From (56); deliver galena middlings to (62), galena-pyrite to (67), pyrite-sphalerite to (77), sphalerite to (99), sphalerite middlings to (82), poor middlings to (87), tailings to (92), and, sometimes galena, to (97).

58. Sump. From the drainings of the jig-product shipping bins, drainings from three elevators in jigging department, (101), (102), (103), (104), (105), (106), (112), (113), (114), (115), (116), and (117); delivers to (59).

59. Screen with 1-millimeter punched holes. From (58); delivers oversize to (60) and undersize to (55),

60. Elevator. From (59); delivers to (61).

61. Trommel with 1-millimeter punched holes. From (60); delivers oversize to (24) and undersize to (55).

62. Sump for galena middlings. From (57), (62), (71), (76), (81), and (86); delivers to (63).

63. Elevator. From (62); delivers to (64).

64. Spitzkasten. From (63); delivers spigot to (65) and overflow to (115).

65. Pointed box. From (64); delivers spigot to (66) and overflow to (106).

66. Two Bilharz tables. From (65); deliver galena to (97), galena middlings to (62), pyrite middlings to (72), pyrite-sphalerite to (77), sphalerite middlings to (82), and poor middlings to (87).

67. Sump for galena-pyrite. From (54), (57), (71), (76), (81), and (86); delivers to (68).

68. Elevator. From (67); delivers to (69).

69. Spitzkasten. From (68); delivers spigot to (70) and overflow to (115).

70. Pointed box. From (69); delivers spigot to (71) and overflow to (106).

71. Four Bilharz tables. From (70); deliver galena to (97), galena middlings to (62), galena-pyrite to (67), pyrite middlings to (72), pyrite-sphalerite to (77), and sphalerite middlings to (82).

72. Sump for pyrite middlings. From (66), (71), (76), and (81); delivers to (73).

73. Elevator. From (72); delivers to (74).

74. Spitzkasten. From (73); delivers spigot to (75) and overflow to (115).

75. Pointed box. From (74); delivers spigot to (76) and overflow to (106).

76. Three Bilharz tables. From (75); deliver galena middlings to (62), galena-pyrite to (67), pyrite to (98), pyrite middlings to (72), sphalerite-pyrite to (77), and sphalerite middlings to (82).

77. Sump for pyrite-sphalerite. From (54), (57), (66), (71), (76), (81), (86), and (91); delivers to (78).

78. Elevator. From (77); delivers to (79).

79. Spitzkasten. From (78); delivers spigot to (80) and overflow to (115).

80. Pointed box. From (79); delivers spigot to (81) and overflow to (106).

81. Five Bilharz tables. From (80); deliver galena middlings to (62), galena-pyrite to (67), pyrite middlings to (72), sphalerite-pyrite to (77), sphalerite to (99), sphalerite middlings to (82), and poor middlings to (87).

82. Sump for sphalerite middlings. From (54), (57), (66), (71), (76), (81), (86), (91), and (96); delivers to (83).

83. Elevator. From (82); delivers to (84).

84. Spitzkasten. From (83); delivers spigot to (85) and overflow to (115).

85. Pointed box. From (84); delivers spigot to (86) and overflow to (106).

86. Five Bilharz tables. From (85); deliver galena middlings to (62), galena-pyrite to (67), pyrite-sphalerite to (77), sphalerite to (99), sphalerite middlings to (82), and poor middlings to (87).

87. Sump for poor middlings. From (54), (57), (66), (81), (86), (91), and (96); delivers to (88).

88. Elevator. From (87); delivers to (89).

89. Spitzkasten. From (88); delivers spigot to (90) and overflow to (113).

90. Pointed box. From (89); delivers spigot to (91), and overflow to (105).

91. One Bilharz, one round, and one Linkenbach table. From (90); the first table delivers sphalerite-pyrite to (77), sphalerite to (99), sphalerite middlings to (82), poor middlings to (87), tailings to (92), and the last two tables deliver sphalerite middlings to (82), poor middlings to (87), tailings to (92), and final tailings to (100).

92. Sump for tailings. From (57), (91), (96), and (101); delivers to (93).

93. Elevator. From (92); delivers to (94).

94. Spitzkasten. From (93); delivers spigot to (95) and overflow to (113).

95. Pointed box. From (94); delivers spigot to (96) and overflow to (105).

96. One round and one Linkenbach table. From (95); deliver sphalerite middlings to (82), poor middlings to (87), tailings to (92), and final tailings to (100).

97. Settling tank for galena. From (54), (57), (66), (71), and (81); delivers galena to (120) and overflow to (112).

98. Settling tank for pyrite. From (76); delivers pyrite to (124) and overflow to (112).

99. Settling tank for sphalerite. From (54), (57), (81), (86), and (91); sphalerite to (123) and overflow to (112),

100. Settling tank for tailings. From (91) and (96); delivers tailings to (125) and overflow to (113).

101. Spitzkasten with 10 spigots. From (49); delivers first four spigots to (92), last six spigots to (58), and overflow to (116).

102. Spitzkasten with 5 spigots. From (32); delivers first three spigots to (107), last two spigots to (58), and overflow to (117).

103. Spitzkasten with 5 spigots. From (44), (46), and (109); delivers first four spigots to (107), last spigot to (58), and overflow to (115).

104. Spitzkasten with 5 spigots. From (36) and (48); delivers spigots to (58) and overflow to (117).

105. Spitzkasten with 10 spigots. From (56) and (90); delivers spigots to (58) and overflow to (113).

106. Spitzkasten with 5 spigots. From (53), (65), (70), (75), (80), and (85); delivers spigots to (58) and overflow to (115).

107. Sump. From (102), (103), and (110); delivers to (108).

108. Elevator. From (107); delivers to (109).

109. Classifier with 2 spigots. From (108); delivers spigots to (110) and overflow to (103).

110. Two 3-compartment jigs. From (109); deliver first hutches of sphalerite to (123), second and third hutches of middlings to (107), and overflow to (111).

111. Settling tank. From (110); delivers tailings to waste dump and overflow to (115).

112. Settling tank. From (97), (98), and (99); delivers spigot to (119) and overflow to (118).

113. Settling tank. From (55), (89), (94), and (105); delivers spigot which is analyzed and sent either to (119) or to waste dump, and overflow to (118).

114. Settling tank. From (52); delivers spigot to (119) and overflow to (118).

115. Settling tank. From (64), (69), (74), (79), (84), (103), (106), and (111); delivers spigot to (119) and overflow to (118).

116. Settling tank. From (101); delivers spigot to (119) and overflow to (118).

117. Settling tank. From (102) and (104); delivers spigot to (119) and overflow to (118).

118. Settling tank. From (112), (113), (114), (115), (116), and (117); delivers clear water back to mill system and tailings to waste dump.

119. Two mechanical feeders. From (112), (113), (114), (115), (116), and (117); deliver to (58).

120. Shipping bin for galena. From (11), (19), (22), (29), (30), (31), (32), (42), (43), (44), and (97).

121. Shipping bin for low-grade sphalerite. From (5), (9), (19), (22), and (23).

122. Shipping bin for calamine. From (5), (9), (19), (22), and (23).

123. Shipping bin for high-grade sphalerite. From (5), (9), (11), (19), (22), (29), (30), (31), (32), (42), (43), (44), (48), (99), and (110).

124. Shipping bin for pyrite. From (5), (9), (11), (19), (22), (43), (44), and (98).

125. Shipping bin for waste material. From (2), (9), (19), (23), and (100).

The Bilharz tables used in this mill are 1 meter wide and 3.2 meters long, have a long rubber belt passing over the end rollers, diagonal shake, and are supported in iron frames.

This plant operates during a 10-hour day shift and employs 64 men, 45 girls, and 3 overseers. The girls are employed at the picking tables.

Eighty-five percent of the zinc minerals are recovered.

In 1904 the average assay of the total galena product was 66% lead. The coarse galena concentrates from the picking tables, cobbing, and the jigs ran 70 to 75% lead and from the concentrating tables from 50 to 60% lead.

The pyrite product from the picking tables, cobbing, and the jigs shows an average analysis of 5% zinc, 0.5 to 2% lead, and 47 to 48% sulphur; and from the tables, 7% zinc, 3 to 4% lead, and about 46% sulphur.

The mill is run by a 180 horse-power engine with condenser and cooling tower, taking steam from one of two water-tube boilers having 164 square meters of heating surface each. One boiler is supplied with a superheater and furnishes steam for the engine and the other boiler is held in reserve.

§ 1480. MILL NO. 148. MILLS MINING AND REDUCTION COMPANY, HAZEL GREEN, WISCONSIN. — This plant has a capacity of about 200 tons per 10 hours.[145] The ore consists of the economic minerals, galena, marcasite, and sphalerite in a limestone gangue, and the run of mine ore assays about as follows: 1% in lead, 9.5% in iron, and 9% in zinc.

The problem is to save the lead, iron, and zinc values. The Trego roaster and Waring magnetic separators which were installed [155] did not serve the purpose intended and have been replaced by a Howell-White type of roaster and Cleveland-Knowles magnetic separators. The method of ore dressing in use in this mill is not typical Wisconsin practice, but such a modification of the Joplin practice as the exigencies of the situation have demanded.

Ore from the mine goes to (1).

1. Grizzly, 7 feet long, with bars of 3-inch shafting set 4.5 inches apart and having a 16° slope. From the mine and (2); delivers oversize to (2) and undersize to (3).

2. Spaller. From (1); delivers waste rock to dump and ore, broken to pieces smaller than 4.5 inches, to (1).

3. Hopper built of 2-inch oak plank and covered with 0.5-inch boiler iron. Capacity 400 tons. Supported with 10 × 10-inch timbers and tied with 1-inch iron rods and cast washers. From (1); delivers to (4).

4. Sixteen-inch Blake-type breaker, built by the Galena Iron Works, making 275 thrusts per minute and having a capacity of 20 tons per hour. From (3); delivers crushed ore to (5).

5. Rolls, 14 × 30 inches, made by the Galena Iron Works and making 22 revolutions per minute. Handle about 16 tons per hour. The shells are from the Joplin Foundry Company and have been in service over a year with no appreciable wear. From (4); deliver crushed ore to (6).

6. Twenty-inch elevator with a 10-ply belt, made of alternate layers of duck and rubber, having a speed of 300 feet per minute, and buckets, set 18 inches apart, elevating the ore 24 feet. From (5), (8), and (13); delivers to (7).

7. Trommel of 0.1875-inch steel plate punched with 0.5-inch holes, having a speed of 20 revolutions per minute, a slope of 8°, and a capacity of 20 tons per hour. From (6); delivers oversize to (8) and undersize to (9).

8. Rolls, 14 × 24 inches, making 25 revolutions per minute, having a capacity of 10 tons per hour, and other details as in (5). From (7); deliver crushed ore to (6).

9. One 7-compartment roughing jig with screens, 32 × 48 inches, made of wrought-iron plate punched with 0.1875-inch holes. Wire cloth screens clog so badly that they could not be used. Even with punched plate screens 2 hours a day are required to clean them. This is done by beating the screen with a piece of old rubber belting attached to a wooden handle. The screens wear about 6 months and it is the beating that destroys them. The plungers make 140 strokes per minute. The products are discharged from screens and hutches by means of Perfection gates. Requires 5 horse-power and 8 tons

of water per ton of ore treated. From (7); delivers clean galena to (11), rough sphalerite concentrates to (11), and tailings to (10).

10. Eighteen-inch elevator with an 8-ply belt, a lift of 60 feet, and other details as in (6). From (9) and (14); delivers to tailings dump.

11. Ten-inch elevator with a 6-ply belt having buckets set 2 feet apart and other details as in (6). From (9); delivers to (12).

12. Trommel with 0.375-inch round punched holes and other details as in (7). From (11); delivers oversize to (13) and undersize to (14).

13. Rolls, 14 × 24 inches, having a capacity of 2 tons per hour and other details as in (8). From (12), (15), and (21); deliver crushed ore to (6).

14. Two 7-compartment cleaner jigs with screens, 28 × 42 inches. The plungers make 160 strokes per minute and all other details are as in (7). Require 5 horse-power each. From (12); deliver finished galena, via cars, to smelter, middlings to (15), finished sphalerite concentrates to (16), and tailings to either (10) or (15).

15. Elevator. From (14); delivers to (13).

Roasting and Magnetic Separating Department.

The material handled here consists of nearly equal parts of sphalerite and marcasite and assays about 0.5% in lead, 30% in zinc, 25% in iron, and 1.8% in calcium carbonate.

16. Elevated hopper of 100 tons capacity. From (14); delivers to (17).

17. Two Mathey cylindrical roasters which are a slight modification of the Howell-White furnace. Each has a capacity of 25 tons per 10 hours. From (16); deliver roasted ore to (18).

18. Spiral conveyor. From (17); delivers to (19).

19. Elevator. From (18); delivers to (20).

20. Concentric trommel with 0.25 and 0.125-inch holes in the screens. From (19); delivers the oversize to (21) and the two undersizes to separate machines in (22).

21. Conveyor. From (20) and (22); delivers to (13).

22. Three Cleveland-Knowles magnetic separators. From (20); deliver clean sphalerite concentrates to (23), middlings to (21), and tailings to tailings dump.

23. Belt conveyor. From (22); delivers to (24).

24. Elevator. From (23); delivers to (25).

25. Shipping bins for sphalerite. From (24); deliver, via cars, to smelter.

The galena concentrates assay about 80% in lead.

In the sphalerite concentrates lead is penalized $1 a unit when in excess of 1%, and lime $0.50 a unit when in excess of 2.5%.

Two hundred tons of crude ore are mined in one shift of 9 hours and milled in one shift of 10 hours. Both are operated but 6 days a week.

The milling costs per ton of mill ore are divided up as follows.

Labor	$0.0650
Power (90 horse-power)	0.1350
Supplies	0.0500
Supervision and incidentals	0.0250
Total	$0.2750

Costs would be lower but for the inferior labor market and the high cost of fuel.

The mill force is as follows:

1 mill man	at $21.00 per week	$21.00
2 mill helpers	at 12.00 " "	24.00
2 grizzly tenders	at 12.00 " "	24.00
1 breaker feeder	at 12.00 " "	12.00
6 men	at $13.50 " "	$81.00

Blacksmiths are paid $15 per week, engineers $15, firemen $15, carpenters $12, pump men $15, and laborers $9.

Inferior Illinois coal costs $3.40 per ton and a really good steaming coal costs $4.85 per ton f.o.b. the mine.

Power and Water.

The power plant consists of 3 boilers aggregating 500 horse-power and divided up as follows:

One 125 horse-power Atlas high-pressure boiler.
" 125 " Brownell high-pressure boiler.
" 250 " Bonson combination boiler.

The mill power is furnished by a 90 horse-power Atlas engine, 14 × 20 inches. A 35 horse-power Atlas automatic high-speed engine, 10 × 16 inches, runs a "Northern" dynamo of 30 kilowatts capacity which furnishes electricity for lighting the mine and mill and for exciting the magnets in the separators. Sixty horse-power is required in running the 3 hoists, 50 horse-power for the compressor, 50 horse-power for the ground pumps, and 15 horse-power for the deep-well pump. A total, therefore, of about 300 horse-power is required to run the whole plant. A Sorge-Cochran purifying and heating system is used.

Approximately 8 tons of water are required in the mill per ton of ore treated. Six hundred gallons per minute is the amount of water required and one-half of this comes direct from the mines. The remainder is secured by having a settling pond and re-using the water. The boilers require 3,000 gallons per 24 hours. This, as well as water for drinking and camp purposes, is furnished by a deep well, sunk 432 feet down to the St. Peters sandstone.

M. MILLS SAVING LEAD, ZINC, AND COPPER VALUES.

Mills 149, 150, and 151 are used to exemplify this class in three districts.

§ 1481. MILL NO. 149. ADELAIDE MILL, GOLCONDA, NEVADA. — The capacity of this plant is 125 tons per 24 hours.[72] The minerals chalcopyrite, pyrite, sphalerite, and galena occur finely disseminated in a hard, dense quartzose gangue which contains spinel and garnet. The problem is to save the economic minerals, chalcopyrite, pyrite, sphalerite, and galena.

Ore from the mine is delivered to (1).

1. Bins of 800 tons capacity. From the mines; deliver to (2).
2. Conveyor. From (1); delivers to (3).
3. Elevator. From (2); delivers to (4).
4. Conveyor. From (3); delivers to (5).
5. Two breakers, 9 × 15 inches, breaking to 1.5 inches. From (4); deliver crushed ore to (6).
6. Three rolls, 15 × 36 inches, crushing to from 0.25 to 0.375 inch. From (5); deliver crushed ore to (7).
7. Twelve-inch belt elevator. From (6); delivers to (8).
8. Storage bins of 200 tons capacity. From (7); deliver to (9).
9. Plunger feeders. From (8); deliver to (10).
10. Four 5-foot Huntington mills with screens having 10 meshes to the inch. From (9); deliver pulp to (11).
11. Four Spitzkasten. From (10); deliver spigots to (12) and overflows to a settling pond.
12. Two belt elevators. From (11); deliver to (13).
13. Two Callow screens using wire cloth screens having 30 meshes to the

inch. Capacity about 65 tons per day. From (12) and (14); deliver oversize to (14) and undersize to (15).

14. Two Huntington mills with wire cloth screens having 40 meshes to the inch. From (13); deliver pulp to (13).

15. Dewatering and distributing tanks. From (13); deliver the pulp thickened to the desired consistency, via distributor, to 25 4-tube series of Coates tubes, or 100 tubes in all, and overflow to waste. See Ore Dressing, § 1355.

§ 1482. MILL NO. 150. NEW CENTRAL ORE DRESSING PLANT, CLAUSTHAL, GERMANY.[115] — This plant, having a capacity of 360 tons in 10 hours, was built in 1904 and 1905 and is located on a gently sloping site.[86] The buildings are constructed of skeleton iron work and artificial sandstone and cover an area of 5,881 square meters. They are heated by steam and lighted by electricity.[135]

Four kinds of ore are treated. The upper Burgstadt ore contains 4.17% galena and 14.12% sphalerite; the lower Burgstadt ore contains 4.93% galena, 20.95% sphalerite, and 0.23% chalcopyrite; the Rosenhof ore contains 7.83% galena and 10.51% sphalerite; and the Zellerfeld ore contains 10.34% galena. The gangue is made up of mica and argillaceous schists with calcite, fluorspar, quartz and, in the Rosenhof district, spathic iron in very small quantities. The problem is to save the lead, zinc, and copper values separately. These ores vary in fineness of dissemination. The lower Burgstadt ore yields concentrates as coarse as 11 millimeters, while the upper Burgstadt and Rosenhof ores require crushing to 4 millimeters to free the values. Consequently the ores are treated separately and large storage bins are required for the accumulation of one ore while another is being run. The sphalerite is very brittle so that for all ore larger than 2.5 millimeters rolls are used for crushing, and for finer ore roller mills are employed. The mill is divided into two main sections for different ores, and, furthermore, the slimes department is divided into several sections to treat the various materials coming from different parts of the mill.

A description of the treatment of the lower Burgstadt ores will be given, as it will show, in general, the scheme followed out for all ores. The ores are delivered to (1).

1. Receiving bins of 2,900 tons capacity. From the mines; deliver, via wagons, to (2).

2. Electric hoist. From (1), (6), and (7); delivers to (3) in one or the other of the two sections.

One section only is described, which has a capacity of 180 tons in 10 hours.

Coarse-Crushing Department.

3. Tipple. From (2); delivers to (4).

4. Grizzly with 100-millimeter spaces between the bars. From (3); delivers oversize, amounting to 20.0% of the total ore, to (5) and undersize to (8).

5. Spalling platform. From (4); delivers ore attached to waste to (7), milling ore to (6), and waste to dump.

6. Breaker breaking to 65 millimeters. From (5); delivers crushed ore, via pocket and car, to (2).

7. Cobbing table. From (5); delivers cobbed ore, via car, to (2) and waste to dump.

8. Hopper. From (4); delivers, via feeder, to (9).

9. Double trommel with 50 and 32-millimeter holes and supplied with water. From (8); delivers material larger than 50 millimeters to (10), 50 to 32-millimeter stuff to the outer ring of (12), and the undersize to (25).

10. Picking table, 5 meters in diameter. From (9); delivers cobbing ore to boxes to be cobbed, milling ore to (11), and waste to dump.

11. Fine breaker. From (10); delivers crushed ore to (15).

12. Double picking and cobbing table, 7 meters in diameter. The outer ring is fed from (9) and the inner ring from (16). Delivers galena, sphalerite, and siliceous shipping ores, via pockets and cars, to storage or smelter, waste to dump, milling ore from the outer ring to (13), and from the inner ring to (14).

13. Coarse rolls, 1 meter in diameter. From (12); deliver crushed ore to (15).

14. Medium rolls, 1 meter in diameter. From (12); deliver crushed ore to (15).

Rolls Department.

15. Bucket elevator. From (11), (13), and (14); delivers ore to (16) and overflow water to (77).

16. Trommel with 32-millimeter holes. From (15); delivers oversize to inner ring of (12) and undersize to (17).

17. Double trommel with 22, 16, and 4-millimeter holes. From (16); delivers 32 to 22-millimeter stuff to (19), 22 to 16-millimeter stuff to (20), 16 to 4-millimeter stuff to (18), and the undersize to (27).

18. Three trommels in series with 11, 8, and 5.6-millimeter screens. The undersize of one is delivered to the next, etc. From (17); deliver 16 to 11-millimeter stuff to (21), 11 to 8-millimeter stuff to (22), 8 to 5.6-millimeter stuff to (23), and 5.6 to 4-millimeter stuff to (24).

19. One 3-compartment jig. From (17); delivers the first discharge, as galena and sphalerite concentrates, to (39); the second discharge, as rich middlings, to (46); the third discharge, as poor middlings, to (58); and the tailings, as poor middlings, to (41).

20. One 3-compartment jig. From (17); delivers the first discharge, as galena and sphalerite concentrates, to (40); the second discharge, as rich middlings, to (46); the third discharge, as poor middlings, to (58); and the tailings to (71).

21. One 3-compartment jig. From (18); delivers the first discharge, as galena and sphalerite concentrates, to (40); the second discharge, as rich middlings, to (46); the third discharge, as poor middlings, to (58); and the tailings to (71).

22. One 4-compartment jig. From (18); delivers the first discharge, as galena concentrates, via pocket and car, to storage or smelter; the second discharge, as rich middlings, to (46); the third and fourth discharges, as poor middlings, to (58); and the tailings to (71).

23. One 4-compartment jig. From (18); delivers the first discharge, as galena concentrates, via pocket and car, to storage or smelter; the second discharge, as rich middlings, to (46); the third and fourth discharges, as poor middlings, to (58); and the tailings to (71).

24. One 4-compartment jig. From (18); delivers the first discharge, as galena concentrates, via pocket and car, to storage or smelter; the second discharge, as rich middlings, to (46); the third and fourth discharges, as poor middlings, to (58); and the tailings to (71).

Mine Fines Department.

25. Double trommel with 22, 16, and 4-millimeter holes. From (9); delivers 32 to 22-millimeter stuff to (29), 22 to 16-millimeter stuff to (30), 16 to 4-millimeter stuff to (26), and undersize to (27).

26. Three trommels in series with 11, 8, and 5.6-millimeter holes. The undersize of one is delivered to the next, etc. From (25); deliver 16 to 11-millimeter stuff to (31), 11 to 8-millimeter stuff to (32), 8 to 5.6-millimeter stuff to (33), and 5.6 to 4-millimeter stuff to (34).

27. Three trommels in series with 2.8, 2.0, and 1.4-millimeter holes. The undersize of one is delivered to the next, etc. From (17) and (25); deliver 4.0 to 2.8-millimeter stuff to (35), 2.8 to 2.0-millimeter stuff to (36), 2.0 to 1.4-millimeter stuff to (37), and the undersize to (28).

28. Hydraulic classifier with 4 spigots. From (27); delivers each spigot to one jig in (38) and overflow to (77).

29. One 3-compartment jig. From (25); delivers the first discharge, as galena and sphalerite concentrates, to (39); the second discharge, as rich middlings, to (46); the third discharge, as poor middlings, to (58); and the tailings, as poor middlings, to (41).

30. Two 3-compartment jigs. From (25); deliver the first discharges, as galena and sphalerite concentrates, to (40); the second discharges, as rich middlings, to (46); the third discharges, as poor middlings, to (58); and the tailings to (71).

31. Two 3-compartment jigs. From (26); deliver the first discharges, as galena and sphalerite concentrates, to (40); the second discharges, as rich middlings, to (46); the third discharges, as poor middlings, to (58); and the tailings to (71).

32. Two 4-compartment jigs. From (26); deliver the first discharges, as galena concentrates, via pockets and car, to storage or smelter; the second discharges, as rich middlings, to (46); the third and fourth discharges, as poor middlings, to (58); and the tailings to (71).

33. Two 4-compartment jigs. From (26); deliver the first discharges, as galena concentrates, via pockets and car, to storage or smelter; the second discharges, as rich middlings, to (46); the third and fourth discharges, as poor middlings, to (58); and the tailings to (71).

34. One 4-compartment jig. From (26); delivers the first discharge, as galena concentrates, via pocket and car, to storage or smelter; the second discharge, as rich middlings, to (46); the third and fourth discharges, as poor middlings, to (58); and the tailings to (71).

35. Two 4-compartment jigs. From (27); deliver the first hutch products, as galena concentrates, via pockets and car, to storage or smelter; the second hutch products, as galena middlings, to (42); the third and fourth hutch products, as poor middlings, to (58); and the tailings to (71).

36. Two 4-compartment jigs. From (27); deliver the first hutch products, as galena concentrates, via pockets and car, to storage or smelter; the second hutch products, as galena middlings, to (43); the third and fourth hutch products, as poor middlings, to (58); and the tailings to (71).

37. Two 5-compartment jigs. From (27); deliver the first hutch products, as galena concentrates, via pockets and car, to storage or smelter; the second hutch products, as galena middlings, to (44); the third and fourth hutch products, as sphalerite concentrates, via pockets and car, to storage or smelter; the fifth hutch products, as poor middlings, to (58); and the tailings to (71).

38. Four 5-compartment jigs. From (28); deliver the first hutch products, as galena concentrates, via pockets and car, to storage or smelter; the second hutch products, as galena middlings, to (45); the third and fourth hutch products, as sphalerite concentrates, via pockets and car, to storage or smelter; the fifth hutch products, as poor middlings, to (58); and the tailings to waste.

39. Cobbing table. From (19) and (29); delivers galena ore, via pockets and car, to storage or smelter and a rich middling product to (46).

40. Cobbing bench. From (20), (21), (30), and (31); delivers galena ore, via pocket and car, to storage or smelter and a rich middling product to (46).

41. Cobbing table. From (19) and (29); delivers a poor middlings product to (58) and waste rock, via pocket and car, to dump.

42. One 3-compartment jig. From (35), (54), and (67); delivers the first hutch product, as galena concentrates, via pocket and car, to storage or smelter; the second hutch product, as rich middlings, to (46); the third hutch product, as sphalerite concentrates, via pocket and car, to storage or smelter; and the tailings, as poor middlings, to (58).

43. One 3-compartment jig. From (36), (55), and (68); delivers the first hutch product, as galena concentrates, via pocket and car, to storage or smelter; the second hutch product, as rich middlings, to (46); the third hutch product, as sphalerite concentrates, via pocket and car, to storage or smelter; and the tailings, as poor tailings, to (58).

44. One 3-compartment jig. From (37), (56), and (69); delivers the first hutch product, as galena concentrates, via pocket and car, to storage or smelter; the second hutch product, as rich middlings, to (46); the third hutch product, as sphalerite concentrates, via pocket and car, to storage or smelter; and the tailings, as poor middlings, to (58).

45. One 3-compartment jig. From (38), (57), and (70); delivers the first hutch product, as galena concentrates, via pocket and car, to storage or smelter; the second hutch product, as rich middlings, to (46); the third hutch product, as sphalerite concentrates, via pocket and car, to storage or smelter; and the tailings, as poor middlings, to (58).

Rich-Middlings Department.

46. Bucket elevator. From (19), (20), (21), (22), (23), (24), (29), (30), (31), (32), (33), (34), (39), (40), (42), (43), (44), (45), (53), and (66); delivers ore to (47) and overflow water to (80).

47. Trommel with 2.5-millimeter holes. From (46); delivers oversize to (48) and undersize to (49).

48. Fine rolls, 1 meter in diameter. From (47) and (51); deliver crushed ore to (50).

49. Roller mill with a 1-millimeter screen. From (47); delivers pulp to (50).

50. Bucket elevator. From (48) and (49); delivers ore to (51) and overflow water to (75).

51. Three sectional trommels in series with 5.6, 4.0, 2.8, 2.0, and 1.4-millimeter screens. The last undersize of one is delivered to the next, etc. From (50); deliver material larger than 5.6 millimeters to (48), 5.6 to 4.0-millimeter stuff to (53), 4.0 to 2.8-millimeter stuff to (54), 2.8 to 2.0-millimeter stuff to (55), 2.0 to 1.4-millimeter stuff to (56), and 1.4 to 0-millimeter stuff to (52).

52. Hydraulic classifier with 2 spigots. From (51); delivers each spigot to one jig in (57) and overflow water to (75).

53. One 4-compartment jig. From (51); delivers the first discharge, as galena concentrates, via pocket and car, to storage or smelter; the second and third discharges, as rich middlings, to (46); the fourth discharge, as poor middlings, to (58); and the tailings, as poor middlings, to (58).

54. One 4-compartment jig. From (51); delivers the first hutch product, as galena concentrates, via pocket and car, to storage or smelter; the second hutch product, as galena middlings, to (42); the third hutch product, as sphalerite middlings, to (42); the fourth hutch product, as poor middlings, to (58); and the tailings, as poor middlings, to (58).

55. One 4-compartment jig. From (51); delivers the first hutch product, as galena concentrates, via pocket and car, to storage or smelter; the second hutch product, as galena middlings, to (43); the third hutch product, as sphalerite middlings, to (43); the fourth hutch product, as poor middlings, to (58); and the tailings, as poor middlings, to (58).

56. One 4-compartment jig. From (51); delivers the first hutch product, as galena concentrates, via pocket and car, to storage or smelter; the second hutch product, as galena middlings, to (44); the third and fourth hutch products, as sphalerite concentrates, via pockets and car, to storage or smelter; and the tailings, as poor middlings, to (58).

57. Two 4-compartment jigs. From (52); deliver the first hutch products, as galena concentrates, via pockets and car, to storage or smelter; the second hutch products, as galena middlings, to (45); the third and fourth hutch products, as sphalerite concentrates, via pockets and car, to storage or smelter; and the tailings, as poor middlings, to (58).

Poor-Middlings Department.

58. Bucket elevator. From (19), (20), (21), (22), (23), (24), (29), (30), (31), (32), (33), (34), (35), (36), (37), (38), (41), (42), (43), (44), (45), (53), (54), (55), (56), (57), (66), (67), (68), (69), and (70); delivers ore to (59) and overflow water to (80).

59. Double trommel with 5.6, 4.0, and 2.5-millimeter holes. From (58); delivers material larger than 5.6 millimeters to (60), 5.6 to 4.0-millimeter stuff to (61), and 4.0 to 0-millimeter stuff to (62).

60. Fine rolls, 1 meter in diameter. From (59); deliver crushed ore to (63).

61. Fine rolls, 1 meter in diameter. From (59) and (64); deliver crushed ore to (63).

62. Three roller mills with 1-millimeter screens. From (59); deliver pulp to (63).

63. Bucket elevator. From (60), (61), and (62); delivers ore to (64) and overflow water to (72).

64. Three sectional trommels in series with 10.0, 5.6, 4.0, 2.8, 2.0, and 1.4-millimeter holes. The last undersize of one is delivered to the next, etc. From (63); deliver material larger than 5.6 millimeters to (61), 5.6 to 4.0-millimeter stuff to (66), 4.0 to 2.8-millimeter stuff to (67), 2.8 to 2.0-millimeter stuff to (68), 2.0 to 1.4-millimeter stuff to (69), and the undersize to (65).

65. Hydraulic classifier with 4 spigots. From (64); delivers each spigot to one jig in (70) and the overflow water to (72).

66. Two 4-compartment jigs. From (64); deliver the first discharges, as galena concentrates, via pockets and car, to storage or smelter; the second discharges, as rich middlings, to (46); the third and fourth discharges, as poor middlings, to (58); and the tailings to (71).

67. Two 4-compartment jigs. From (64); deliver the first hutch products, as galena concentrates, via pockets and car, to storage or smelter; the second hutch products, as galena middlings, to (42); the third and fourth hutch products, as poor middlings, to (58); and the tailings to (71).

68. Two 4-compartment jigs. From (64); deliver the first hutch products, as galena concentrates, via pockets and car, to storage or smelter; the second hutch products, as galena middlings, to (43); the third and fourth hutch products, as poor middlings, to (58); and the tailings to (71).

69. Two 5-compartment jigs. From (64); deliver the first hutch products, as galena concentrates, via pockets and car, to storage or smelter; the second hutch products, as galena middlings, to (44); the third and fourth hutch products, as sphalerite concentrates, via pockets and car, to storage or smelter; the fifth hutch products, as poor middlings, to (58); and the tailings to waste.

70. Four 5-compartment jigs. From (65); deliver the first hutch products, as galena concentrates, via pockets and car, to storage or smelter; the second

hutch products, as galena middlings, to (45); the third and fourth hutch products, as sphalerite concentrates, via pockets and car, to storage or smelter; the fifth hutch products, as poor middlings, to (58); and the tailings to waste.

Tailings Elevator.

71. Bucket elevator. From (20), (21), (22), (23), (24), (30), (31), (32), (33), (34), (35), (36), (37), (66), (67), and (68); delivers tailings to waste and overflow water to (79).

Slimes Department.

One slimes department serves both sections of the mill.

72. Spitzkasten for poor slimes middlings. From (63) and (65); delivers spigots to (74) and overflow to (90).

73. Two 4-compartment jigs which may be used here in place of the spitzkasten. They deliver the first hutch products, as galena concentrates, via pockets and car, to storage or smelter; the second hutch products, as galena slimes middlings, to (81); the third hutch products, as sphalerite concentrates, via pockets and car, to storage or smelter; the fourth hutch products, as sphalerite slimes middlings, to (84); and the tailings to waste.

74. Six Humboldt riffle tables of the Wilfley type. Two Bartsch percussion round tables, two Harz round rotating cement-buddles. From (72); deliver galena concentrates, via pockets and car, to storage or smelter; galena slimes middlings to (81); sphalerite concentrates, via pockets and car, to storage or smelter; sphalerite slimes middlings to (84); poor slimes middlings to (87); and tailings to waste.

75. Spitzkasten for rich slimes middlings. From (50) and (52); delivers spigots to (76) and overflow to (90).

76. One Humboldt riffle table of the Wilfley type. One Harz round rotating cement-buddle. From (75); deliver galena concentrates, via pockets and car, to storage or smelter; galena slimes middlings to (81); sphalerite concentrates, via pockets and car, to storage or smelter; sphalerite slimes middlings to (84); and slimes tailings to (87).

77. Spitzkasten for slimes carried in crude ore. From (15) and (28); delivers spigots to (78) and overflow to (90).

78. Six Humboldt riffle tables of the Wilfley type. Two Bartsch percussion round tables. Two Harz round rotating cement-buddles. From (77); deliver galena concentrates, via pockets and car, to storage or smelter; galena slimes middlings to (81); sphalerite concentrates, via pockets and car, to storage or smelter; sphalerite slimes middlings to (84); poor slimes middlings to (87); and tailings to waste.

79. Spitzkasten for tailings slimes. From (71); delivers spigots to (87) and overflow to (90).

80. Spitzkasten for slimes overflow of middlings elevators. From (46) and (58); delivers spigots to (84) and overflow to (90).

81. Pump for galena slimes middlings. From (73), (74), (76), (78), (83), (86), and (89); delivers to (82).

82. Spitzkasten for galena slimes middlings. From (81); delivers spigots to (83) and overflow to (90).

83. One Humboldt riffle table of the Wilfley type. Two Bartsch tables. From (82); deliver galena concentrates, via pockets and car, to storage or smelter; galena slimes middlings to (81); sphalerite concentrates, via pockets and car, to storage or smelter; sphalerite slimes middlings to (84); and poor slimes middlings to (87).

84. Pump for sphalerite slimes middlings. From (73), (74), (76), (78), (80), (83), (86), and (89); delivers to (85).

85. Spitzkasten for sphalerite slimes middlings. From (84); delivers spigots to (86) and overflow to (90).

86. Three Humboldt riffle tables of the Wilfley type. Two Harz round rotating cement-buddles. From (85); deliver galena concentrates, via pockets and car, to storage or smelter; galena slimes middlings to (81); sphalerite concentrates, via pockets and car, to storage or smelter; sphalerite slimes middlings to (84); and poor slimes middlings to (87).

87. Pump for poor slimes middlings. From (74), (76), (78), (79), (83), and (86); delivers to (88).

88. Spitzkasten for poor slimes middlings. From (87); delivers spigots to (89) and overflow to (90).

89. Three Humboldt riffle tables of the Wilfley type. Two Harz round rotating cement-buddles. From (88); deliver galena slimes middlings to (81); sphalerite concentrates, via pockets and car, to storage or smelter; sphalerite slimes middlings to (84); and tailings to waste.

90. Thirty-six settling tanks. From (72), (75), (77), (79), (80), (82), (85), and (88); deliver settled slimes to the old mill to be concentrated and the overflows, via two 300-millimeter centrifugal pumps, to a tank at the top of the mill building and thence to the mill system again.

There are 96 jigs in the whole mill. All have pitch pine bodies and sieves 450 × 950 millimeters. The 3-compartment jigs are accelerated jigs while the 4 and 5-compartment jigs are Harz eccentric jigs.

In the slimes department the Humboldt tables treat the coarse material, the Bartsch tables treat the medium material, and the Harz convex round buddles treat the fine material.

The coarse mill-tailings are used to make a dam and the fine tailings are run in behind the coarse. The water filters through the dam and comes out clear and ready for re-use.

Section II.

(*Capacity* 180 *tons in* 10 *hours*).

This section is practically the same as the first section. It treats ores that are more coarsely disseminated and consequently the cobbing and hand picking yield some high-grade galena, sphalerite, and chalcopyrite ores. There are slight differences in the sizes of the holes of the trommels located in the rich and poor-middlings departments, and the quality of the products from the various jig compartments is not the same as in the first section.

The average work of one year shows that 100 tons of crude ore yielded:

0.99 ton of galena concentrates from hand picking.
2.21 tons of galena concentrates from jigging.
0.55 ton of galena concentrates from tabling.
1.05 tons of sphalerite concentrates from hand picking.
0.32 ton of sphalerite concentrates from jig beds.
9.93 tons of sphalerite concentrates from jigging.
4.34 tons of sphalerite concentrates from tabling.
80.61 tons of waste rock and tailings.

The galena concentrates averaged to run 72.53% in lead; the sphalerite concentrates, 54.39% in zinc; and the tailings averaged to contain 0.39% in lead and 1.88% in sphalerite. Compared with the old mill which employed 450 men this mill uses only 250 and works but one 10-hour day shift per 24 hours.

Power and Water.

The power is generated in two central stations, Rosenhof and Einersberg. In the Rosenhof station there are two hydraulic turbines; one has an effective fall of 68 feet, and, with an efficiency of 77%, develops 25.5 horse-power; the other, with a fall of 60.75 feet and the same efficiency, develops 16.5 horse-power. These turbines are direct belted to two 530-volt direct-current generators which furnish power for the mine. In the Einersberg station, four gas engines and three turbines are installed. The turbines are of 48, 170, and 60 effective horse-power respectively; they are direct belted to 530-volt direct-current generators. The three gas engines are similarly constructed, each for an effective horse-power of 150. They are horizontal, single-cylinder, four-cycle engines operating on the Körting gas system. Each producer suffices for 150 horse-power. These engines drive 530-volt direct-current generators and the combined power is conveyed to the mill and thence to the mine where it is united with the power from the Rosenhof station. To transform the high-tension current for lighting purposes a small direct-current transformer is erected in the Einersberg station, which steps the current down to 250 volts.

Two 210 horse-power direct-current electric motors run the two sections of the mill; one 70 horse-power motor runs the slimes department; two 100 horse-power motors run the two centrifugal pumps, and one 2.4 horse-power motor runs the hoist.

The mill requires 20 cubic meters of water per minute. Eighteen cubic meters can be drawn from the supply tank at the top of the mill. Twelve cubic meters, which go off with the tailings and are lost, are supplied to the slimes department as fresh water.

§ 1483. MILL NO. 151. THE COMPAÑIA MINERA DEL TIRO GENERAL, CHARCAS, SAN LUIS POTOSI, MEXICO.[75] — The ores treated contain the following minerals in a siliceous limestone gangue: pyrite, sphalerite, galena and chalcopyrite as well as some surface carbonates and oxides which, when sorted and mixed with sorted sulphides, keep the zinc below the penalty limit and allow the shipment of some crude ores. All attempt at compactness was sacrificed in the crushing and screening department for the use of an old mill having walls 1 meter thick. All the concentrating apparatus, however, is located in a new and separate structure built of corrugated iron.[34] Higher grade ore from the mine is delivered to (1) and lower grade ore to (2).

1. Ore-sorting patio. From the mine; delivers high-grade copper ore which is mixed with surface carbonates to the smelter at Aguascalientes, high-grade lead ore which is mixed with surface carbonates to the smelter at Monterey, and low-grade ores to (2).

2. Blake breaker of Cananea type with a 10 × 20-inch jaw opening breaking to 1.5 inches. Capacity, about 15 tons per hour. From the mine and (1); delivers crushed ore to (3).

3. Elevator. From (2); delivers to (4).

4. Trommel with 1.25-inch round holes punched in steel plate. From (3); delivers oversize to (5) and undersize to (6).

5. Blake breaker with a 7 × 12-inch jaw opening breaking to 0.5 inch. From (4); delivers crushed ore to (6).

6. Mill feed bin of about 80 tons capacity with bottom sloping at 45°. From (4) and (5); delivers to (7).

7. Trommel with 0.5-inch round holes punched in steel plate. From (6); delivers oversize to (8) and undersize to (9).

8. Fraser and Chalmers roughing rolls crushing to 0.5 inch. From (7) and (10); deliver crushed ore to (9).

9. Elevator. From (7) and (8); delivers to (10).

10. Trommel, with 0.5-inch round punched holes, making 18 revolutions per minute. From (9); delivers oversize to (8) and undersize to (11).

11. Shaft drier, 3.5 × 6 feet and about 30 feet high, having longitudinal deflectors for arresting the fall of the ore. The top is trapped so that a current of air, moved by a No. 6 fan, is drawn through a heating grate at the bottom. Thus a large volume of slightly heated air produces a maximum drying effect, with a minimum of fuel. From (10); delivers dry ore to (12).

12. Sampler. From (11); delivers sample to assayer and reject to (13).

13. Elevator. From (12) and (15); delivers to (14).

14. Trommel, with 0.1875-inch round punched holes, making 18 revolutions per minute. From (13); delivers oversize to (15) and undersize to (16).

15. El Paso Foundry convertible rolls, 14 × 36 inches, crushing to 0.1875 inch and making 70 revolutions per minute. Use Midvale steel shells. From (14); deliver crushed ore to (13).

16. Elevator. From (14) and (18); delivers to (17).

17. Sixteen-mesh Colorado Iron Works impact screen having a slope of 25° and making 100 throws per minute. From (16); delivers oversize to (18) and undersize to (19).

18. El Paso Foundry convertible rolls, 14 × 36 inches, crushing to 16 mesh and making 85 revolutions per minute. Use Midvale steel shells. From (17); deliver crushed ore to (16).

19. Elevator. From (17); delivers to (20).

20. Twenty-six mesh Colorado Iron Works impact screen having a slope of 25° and making 100 throws per minute. From (19); delivers oversize to (21) and undersize to (22).

21. El Paso Foundry convertible rolls, 14 × 36 inches, crushing to 26 mesh and making 95 revolutions per minute. Use Midvale steel shells. From (20); deliver crushed ore to (22).

22. Canby mechanical pneumatic disc dust-separator, 28 inches in diameter. From (20), (21), and air drawn from all roll housings and elevators; delivers dust (98% through 200 mesh) to (23) and ore to (24).

23. Collector of the Cyclone type. From (22). Dust stored for future special treatment.

24. Elevator. From (22); delivers to (25).

25. Sutton, Steele, and Steele vibrometer ore-sizer in the screening tower. From (24); delivers six sizes; on 26-mesh, through 26 on 34, through 34 on 46, through 46 on 60, through 60 on 70, and through 70 mesh, each size to a separate bin in (26).

26. Six bins of from 4 to 8 tons capacity with bottoms sloping at 45°. From (25); deliver to respective tables in (27).

27. Six Sutton, Steele, and Steele pneumatic dry tables, 12 feet long, 5 feet wide, and making from 500 to 450 throws per minute, each from 0.375 to 0.75 inch in length. The pervious deck and constant air current cause mobility and the impervious strips under the table deck cause the riffles which, together with a reciprocating movement, give the separation. Short strokes and high speeds are used on coarse material and vice versa on fine material. Each table has a capacity of over 40 metric tons on the coarser sizes and from 12 to 25 metric tons on the finest sizes per 24 hours. From (26) via trapped feed; deliver lead concentrates, via pipe and sacks, to smelter; lead-iron-zinc middlings to (28); zinc concentrates, if they contain but little copper, via pipe and sacks, to smelter; and if they contain much copper, via pipe, to (33); zinc-silica middlings to (28); and tailings to (34).

28. Eight-inch Robins belt conveyor having a speed of 200 feet per minute,

a capacity of 25 tons per hour, and an inclination, for a part of the distance, of 22°. From (27); delivers to (29).

29. Elevator. From (28); delivers to (30).

30. Sutton, Steele, and Steele vibrometer ore-sizer. From (29); delivers 10 sizes to separate bins in (31).

31. Ten bins with details as in (26). From (30); deliver, periodically, 4 at a time, to (32).

32. Four Sutton, Steele, and Steele pneumatic dry tables. For other details see (27). Each table receives a given size from a bin in (31) and delivers lead concentrates, via pipe and sacks, to smelter; zinc concentrates if they contain but little copper, via pipe and sacks, to smelter; and if they contain much copper, via pipe, to (33); and tailings to (34).

33. Sutton, Steele, and Steele dielectric separator. From (27) and (32); delivers copper-iron concentrates, via sacks, to smelter, and zinc concentrates, via sacks, to smelter.

34. Eight-inch Robins belt conveyor with details as in (28). From (27) and (32); delivers to (35).

35. Tailings bin. From (34); delivers to tailings dump.

Magnetic separation was impossible at this plant because the sphalerite was of the "resin jack" variety and non-magnetic, there was too little iron present to roast and separate, nor was there water enough to warrant the erection of a wet plant.

It is claimed that the present plant is making zinc concentrates running from 50 to 53% in zinc, and that the separation is much sharper and the tailings 50% cleaner than could be obtained with wet tables.

All the elevators are of 12-inch, 6-ply "Leviathan" belting having speeds of about 250 feet per minute and pressed-steel buckets, 5.5 × 10 inches.

For furnishing air to the tables there are 3 sizes of American Blower Company exhaust fans, Nos. 6, 5, and 4, the largest on the coarsest and the smallest on the finest mesh. They run at 1,000 revolutions per minute and must handle dust-free air.

Labor and Wages.

Two 12-hour shifts per 24 hours are employed at from $0.75 to $1.50 per shift.

Power.

The present power plant consists of old slide-valve engines economized by cross-compounding the small table engine to the somewhat larger "Atlas" roll and crusher engine. About 80 horse-power is required by the whole plant, of which the crushers and rolls use 30 horse-power.

N. MILLS SAVING ZINC AND MANGANESE VALUES.

Mill 152 is the typical plant belonging to this group.

§ 1484. MILL NO. 152. NO. 2 MILL OF THE NEW JERSEY ZINC COMPANY, FRANKLIN FURNACE, NEW JERSEY. — This mill [111] [190] is composed of five departments, with storage between each department, as follows: [156]

Rough-crushing department.....	150 tons capacity per hour
Fine-crushing department	100 tons capacity per hour
Storage and sizing department	100 tons capacity per hour

Separator House A.

Magnetic separating department ..	50 tons capacity per hour
Jig and table department	25 tons capacity per hour

The crude ore treated consists of the following important economic minerals: zincite, willemite, and franklinite, with a number of zinc-bearing minerals of minor importance too numerous to mention, as there are about 80 minerals encountered at this place, also a gangue of calcite and biotite.

The problem is to separate the material into four classes.

A. First magnetic product of franklinite which is shipped to the works and reduced in the zinc oxide furnaces. The residue from this product is then treated in the spiegel furnaces.

B. Second magnetic product of fowlerite, garnet, tephroite, and other silicate of manganese minerals containing zinc, which is shipped to the works and reduced in the zinc oxide furnaces. The residue from this product is discarded, being high in silica.

C. Jig and table concentrates, zincite and willemite, which are shipped to the works, also to Europe, and reduced in the spelter furnaces, making the highest grade of spelter produced.

D. Jig and table tailings, calcite with a very small percent of biotite, which is shipped to market for concrete, to the mine for filling, or to the waste dump.

Rough-Crushing Department.

The ore comes from ore bins of 200 tons capacity at the Parker shaft, ore bins of 1,400 tons capacity at the Taylor mine, and from the Sterling Hill mine at Ogdensburg, New Jersey. It is delivered, via 50-ton hopper-bottomed, standard-gauge steel cars, to (1).

1. Track scales. From cars; deliver to (2).

2. Four loading pockets, two at the collar, one at the 750-foot level, and one at the 950-foot level of the Palmer shaft. The first two have a capacity of 350 tons each and discharge via four automatic loading chutes. The last two pockets have a capacity of 800 tons each and discharge via eight automatic loading chutes. From (1); deliver to (3).

3. Four skips of 5 tons capacity each. From (2); deliver to (4).

4. Grizzly, 18 × 23 feet, having 5-inch spaces between the bars and a slope adjustable between 40 and 50°. From (3); delivers oversize to (5) and undersize to (10).

5. Hopper and chute of 50 tons capacity. From (4); delivers to (6).

6. Adjustable feed-roller. From (5); delivers to (7).

7. Trommel, 4 × 8 feet, with 1.5-inch holes. Used for washing the ore before picking. From (6); delivers oversize to (8) and undersize to (12).

8. Two picking tables, 22 feet in diameter on the inside and 30 feet on the outside, having peripheral speeds of 40 feet per minute. From (7); deliver waste rock, via chutes, to (18) and ore, via chutes, to (9).

9. Two style "D," No. 8, McCully breakers breaking to 5 inches. From (8); deliver crushed ore periodically, via hoppers and discharge chutes, to (11).

10. Hopper and chute of 40 tons capacity. From (4); delivers, via feed roller, to (11).

11. Grizzly with 1-inch spaces between the bars. From (9) and (10); delivers oversize periodically, via discharge chute, to (12) and undersize periodically, via discharge chute, to (12).

12. Thirty-inch Robins belt conveyor with a conveying length of 315 feet, a speed of 323 feet per minute and an inclination of 13.5 °. From (7) and (11); delivers to (13).

13. Two Rowand incline screens, 2 sections long by 1 section wide, plates, 4 × 4 feet, with 2-inch openings. From (12); deliver oversize to (14) and undersize, via valves, to (16).

14. Thirty-six inch Robins conveying and picking belt with a conveying length of 36.5 feet, a speed of 40 feet per minute, and an inclination of 15.5°. From (13); delivers waste rock to (17) and ore, via valve, to (15).

15. Two storage bins of 1,500 tons capacity each. From (14); each delivers (coarse ore between 2 and 5 inches), via feed roller, 2 feet long by 2.5 feet in diameter, to (20).

16. Two storage bins of 1,500 tons capacity each. From (13); each delivers, (fine ore through 2 inches), via feed rollers, 2 feet long by 2.5 feet in diameter, to (23).

17. Rock bin of 75 tons capacity. From (14); delivers, via chutes, to (19).

18. Rock bin of 75 tons capacity. From (8); delivers to (19).

19. Standard gauge railroad cars and track scales. From (17) and (18); deliver, via Ding Dong shaft-pocket, for mine filling or to the waste dump.

Fine-Crushing Department.

20. Twenty-four inch Robins belt conveyor with a conveying length of 55 feet, a speed of 300 feet per minute, and run level. From (15); delivers to (21).

21. Edison corrugated rolls, 36 × 36 inches, crushing to 2 inches and making 135 revolutions per minute. From (20); deliver crushed ore to (22).

22. Rowand incline screen, 3 sections long by 1 section wide, plates, 36 × 36 inches with 0.625 × 1.5-inch openings. From (21); delivers oversize to (25) and undersize to (35).

23. Twenty-four inch Robins belt conveyor with a conveying length of 59 feet, a speed of 300 feet per minute, and run level. From (16); delivers to (24).

24. Rowand incline screen with details as in (22). From (23); delivers oversize to (25) and undersize to (35).

25. Twenty-four inch Robins conveying and picking belt with a conveying length of 57.5 feet, a speed of 350 feet per minute, and an inclination of 16.75°. From (22) and (24); delivers to (26).

26. Edison corrugated rolls, 36 × 36 inches, crushing to 1 inch and making 135 revolutions per minute. From (25); deliver crushed ore to (27).

27. Rowand incline screen with details as in (22). From (26); delivers oversize to (28) and undersize to (29).

28. Edison smooth rolls, 36 × 36 inches, crushing to 0.5 inch and making 100 revolutions per minute. From (27) and (34); deliver crushed ore to (29).

29. Twenty-four inch Robins belt conveyor with a conveying length of 52 feet, a speed of 325 feet per minute, and an inclination of 5°. From (27), (28), and (35); delivers to (30).

30. Twenty-four inch Robins belt conveyor with a conveying length of 22 feet, a speed of 375 feet per minute, and an inclination of 25°. From (29); delivers to (31).

31. Twenty-four inch Robins belt conveyor with a conveying length of 100 feet, a speed of 350 feet per minute, and an inclination of 25°. From (30); delivers to (32).

32. Twenty-four inch Robins belt conveyor with a conveying length of 109 feet, a speed of 350 feet per minute, and an inclination of 23°. From (30); delivers to (33).

33. Rowand incline screen with plates, 30 × 36 inches, and other details as in (22). From (32); delivers oversize to (34) and undersize, via chute and valve, to (36).

34. Twenty-four inch Robins belt conveyor with a conveying length of 74 feet, a speed of 50 feet per minute, and run level. An electro-magnet is

situated over this belt for removing steel. From (33); delivers ore to (28) and steel to scrap heap.

35. Eighteen-inch Robins belt conveyor with a conveying length of 55.5 feet, a speed of 300 feet per minute, and run level. From (22) and (24); delivers, via chute, to (29).

36. Two Rowand, 6-foot, brick tower driers. One has 9 sections and the other 8, each 2.5 feet high. From (33); deliver dry ore, via segmental discharge gate, to (37).

37. Thirty-inch Robins belt conveyor with a conveying length of 29 feet, a speed of 350 feet per minute, and an inclination of 16°. From (36) and (47); delivers to (38).

38. Thirty-inch Robins belt conveyor with a conveying length of 127 feet, a speed of 350 feet per minute, and an inclination of 25°. From (37); delivers to (39).

39. Thirty-inch Robins belt conveyor with a conveying length of 98 feet and other details as in (38). From (38); delivers to (40).

40. Three Robins conveyor belts, *A*, *B*, and *C*. *A* has a width of 30 inches, a conveying length of 16 feet, a speed of 350 feet per minute, and an inclination of 20°. *B* has a width of 24 inches, a conveying length of 21 feet, and other details like *A*. *C* has a width of 18 inches, a conveying length of 17 feet, and other details like *A*. *A*, *B*, and *C* receive from (39) and deliver, via trippers, to (41).

41. Hopper of 40 tons capacity. From (40); delivers to (42).

42. Two Rowand incline screens, each 10 sections long by 10 sections wide, plates 12 × 26 inches with 0.109 × 0.5-inch openings. From (41); deliver oversize to (43) and undersize to (48).

43. Two 18-inch Robins belt conveyors with conveying lengths of 38 feet, speeds of 300 feet per minute, and run level. From (42); deliver to (44).

44. Hopper of 40 tons capacity. From (43); delivers, via 2 roller feeders, to (45).

45. Two Bacon finishing rolls, 30 × 36 inches, crushing to 0.0625 inch and making 100 revolutions per minute. From (44); deliver crushed ore to (46).

46. Twenty-four inch Robins belt conveyor with a conveying length of 27 feet, a speed of 300 feet per minute, and run level. From (45); delivers to (47).

47. Twenty-four inch Robins belt conveyor with a conveying length of 41 feet, a speed of 325 feet per minute, and an inclination of 7°. From (46); delivers cold ore onto the tail of the hot-ore conveyor belt (37).

48. Two 18-inch Robins belt conveyors with conveying lengths of 55 feet, speeds of 250 feet per minute, and run level. From (42); deliver to (49).

49. Two 24-inch elevators with 18-inch buckets. One elevates the ore 48 feet and the other 56 feet. From (48); deliver to (50).

50. Twenty-four inch conveying and weighing belt with a conveying length of 63 feet, a speed of 300 feet per minute, and run level. From (49); delivers, via hopper, valve, and chutes, to (51) or (52).

51. Nine crude-ore shipping bins having a total capacity of 600 tons. From (50); deliver, via standard gauge railroad cars and track scales, to market.

52. Twenty-four inch Robins belt conveyor with a conveying length of 70 feet, a speed of 300 feet per minute, and an inclination of 8°. From (50); delivers, via chute and valve, to (53).

53. Two 24-inch elevators, with 18-inch buckets each elevating the ore 30 feet. From (52); deliver to (54).

54. Two Roger hoe conveyors for distributing, 3 feet wide by 40 feet long. From (53); deliver to (55).

55. Two hoppers of 10 tons capacity each. From (54); deliver to (56).

56. Four Rowand incline screens, each 10 sections long by 12 sections wide, plates 12 × 26 inches with 0.01 × 0.5-inch opening. From (55); deliver oversize, via chutes, to (57) and undersize to (58).

57. Eighteen steel storage-tanks with a total capacity of 10,000 tons in two series, *A* and *B*, of nine tanks each. From (56); tanks 4, 5, 6, 7, 8, and 9, *A* and *B*, deliver via segmental feed gates, to (60) and tanks 1, 2, and 3, *A* and *B*, via segmental feed gates, to (62).

58. Two 14-inch Robins belt conveyors with conveying lengths of 120 feet, speeds of 200 feet per minute, and run level. From (56); deliver, via chutes, to (59).

59. Eight fines shipping-bins with a total capacity of 500 tons. From (58); deliver, via standard gauge railroad cars and track scales, to market.

Storage and Sizing Department.

60. Four 18-inch Robins belt conveyors with conveying lengths of 39 feet, speeds of 250 feet per minute, and run level. From (57); deliver to (61).

61. Four 18-inch Robins belt conveyors with conveying lengths of 16.5 feet, speeds of 300 feet per minute, and inclinations of 14°. From (60); deliver to (62).

62. Two 18-inch Robins belt conveyors with conveying lengths of 45.5 feet, speeds of 300 feet per minute, and inclinations of 7°. From (57) and (61); deliver, via hoppers, chutes, and valves, to (63) or (64).

63. One 18-inch Robins conveying and weighing belt with a conveying length of 35 feet, a speed of 300 feet per minute, and an inclination of 7°. From (62); delivers to proposed separater house *B*.

64. One 18-inch Robins conveying and weighing belt with details as in (63). From (62); delivers to (65) in separator house *A*.

Separator House A.

65. Sixteen-inch elevator with 14-inch buckets elevating the ore 82.5 feet. From (64); delivers to (66).

66. Automatic sampler, riffle type with 12 divisions. From (65); delivers sample to bucking room and reject to (67).

67. Rowand incline screen, 9 sections long by 4 sections wide, plates 12 × 18 inches with 0.187 × 0.5-inch openings. From (66); delivers oversize, due to leaks in screens, etc., in fine-crushing and storage department, to (68); and undersize, via chutes, to (72).

68. Storage bin of 75 tons capacity. From (67), (71), (118), and (119); delivers to (69).

69. Two re-grinding rolls, 10 × 18 inches, making 175 revolutions per minute. From (68); deliver crushed ore to (70).

70. Two 10-inch elevators with 8-inch buckets, each elevating the ore 47 feet. From (69); deliver to (71).

71. Two Rowand incline screens, each 8 sections long by 2 sections wide, plates 12 × 18 inches with 0.032 × 0.5-inch openings. From (70); deliver oversize to (68) and undersize to (77).

72. Two Rowand type "E"–"F" magnetic separators, each having one magnet with 100,000 ampere turns in which a 125-volt current is used. From (67); deliver magnetic product to (73) and non-magnetic product to (77).

73. Ten-inch elevator with 8-inch buckets elevating the ore 34 feet. From (72); delivers to (74).

74. Fourteen-inch Robins conveying and weighing belt with a conveying

length of 63 feet, a speed of 250 feet per minute, and run level. From (73); delivers to (75).

75. Automatic sampler, riffle type with 8 divisions. From (74); delivers sample to bucking room and reject to (76).

76. Shipping bins 1, 2, and 3 for highly magnetic franklinite products with a total capacity of 200 tons. From (75); deliver, via standard gauge railroad cars and track scales, to market.

77. Sixteen-inch elevator with 14-inch buckets elevating the ore 54 feet. From (71) and (72); delivers to (78).

78. Rowand incline screen, 10 sections long by 6 sections wide, plates 12 × 18 inches with 0.015 × 0.5-inch openings. From (77); delivers oversize to (79) and undersize, via chutes, to (81).

79. Sixteen-inch elevator with 14-inch buckets elevating the ore 50 feet. From (78); delivers to (80).

80. Edison tower screen, 6 sections long by 12 sections wide, plates 18 × 24 inches with 0.015 × 0.5-inch openings. From (79); delivers oversize to (82) and undersize, via chute, to (81).

81. Storage bins 1, 2, 3, and 4 with a total capacity of 50 tons. From (78) and (80); deliver ore through 0.015 and on 0.010 inch to (101).

82. Fourteen-inch elevator with 12-inch buckets elevating the ore 50 feet. From (80); delivers to (83).

83. Edison tower screen with 0.020 × 0.5-inch openings and other details as in (80). From (82); delivers oversize to (85) and undersize, via chutes, to (84).

84. Storage bins 5, 6, 7, and 8 with a total capacity of 50 tons. From (83); deliver ore through 0.020 and on 0.015 inch to (102).

85. Fourteen-inch elevator with 12-inch buckets elevating the ore 45 feet. From (83); delivers to (86).

86. Edison tower screen with 0.025 × 0.5-inch openings and other details as in (80). From (85); delivers oversize to (88) and undersize, via chutes, to (87).

87. Storage bins 9, 10, 11, and 12 with a total capacity of 50 tons. From (86); deliver ore through 0.025 and on 0.020 inch to (103).

88. Fourteen-inch elevator with details as in (85). From (86); delivers to (89).

89. Rowand incline screen, 12 sections long by 6 sections wide, plates 12 × 18 inches with 0.032 × 0.5-inch openings. From (88); delivers oversize to (90) and undersize, via chutes, to (91).

90. Storage bins 13, 14, 15, and 16 with a total capacity of 50 tons. From (89); deliver ore through 0.032 and on 0.025 inch to (104).

91. Twelve-inch elevator with 10-inch buckets elevating the ore 45 feet. From (89); delivers to (92).

92. Edison tower screen with 0.042 × 0.5-inch openings and other details as in (80). From (91); delivers oversize to (94) and undersize, via chutes, to (93).

93. Storage bins 17, 18, 19, and 20 with a total capacity of 50 tons. From (92); deliver ore through 0.042 and on 0.032 inch to (105).

94. Twelve-inch elevator with details as in (91). From (92); delivers to (95).

95. Edison tower screen with 0.058 × 0.5-inch openings and other details as in (80). From (94); delivers oversize to (97) and undersize, via chutes, to (96).

96. Storage bins 21, 22, 23, and 24 with a total capacity of 50 tons. From (95); deliver ore through 0.058 and on 0.042 inch to (106).

97. Twelve-inch elevator with details as in (91). From (95); delivers to (98).

98. Rowand incline screen, 10 sections long by 4 sections wide, plates 12 × 18 inches with 0.078 × 0.5-inch openings. From (97); delivers oversize, via chutes, to (100) and undersize, via chutes, to (99).

99. Storage bins 25, 26, 27, and 28 with a total capacity of 50 tons. From (98); deliver ore through 0.078 and on 0.058 inch to (107).

100. Storage bins 29, 30, 31, and 32 with a total capacity of 50 tons. From (98); deliver ore through 0.109 and on 0.078 inch to (108).

Magnetic Separator Floor.

Separator House A.

101. Four 6-pole Rowand-Wetherill type "E", 18-inch belt, magnetic separators. Poles 1 and 2 have 20,000, 3 and 4 have 40,000, and 5 and 6 have 60,000 ampere turns. A 125-volt direct current is used. From (81); deliver the more magnetic product to (109), slightly magnetic product to (116), and non-magnetic product to (125).

102. Four magnetic separators with details as in (101). From (84); deliver the more magnetic product to (109), slightly magnetic product to (116), and non-magnetic product to (125).

103. Four magnetic separators with details as in (101). From (87); deliver the more magnetic product to (109), slightly magnetic product to (116), and non-magnetic product to (125).

104. Four magnetic separators with details as in (101). From (90); deliver the more magnetic product to (109), slightly magnetic product to (116), and non-magnetic product to (125).

105. Four magnetic separators with details as in (101). From (93); deliver the more magnetic product to (109), slightly magnetic product to (116), and non-magnetic product to (125).

106. Four magnetic separators with details as in (101). From (96); deliver the more magnetic product to (109), slightly magnetic product to (116), and non-magnetic product to (125).

107. Four magnetic separators with details as in (101), except that the first two poles have 30,000, the second two poles 60,000, and the third two poles 100,000 ampere turns. From (99); deliver the more magnetic product to (109), slightly magnetic product to (116), and non-magnetic product to (125).

108. Four magnetic separators with details as in (107). From (100); deliver the more magnetic product to (109), slightly magnetic product to (116), and non-magnetic product to (125).

109. Two 14-inch Robins belt conveyors with conveying lengths of 123 feet, speeds of 200 feet per minute, and run level. From (101), (102), (103), (104), (105), (106), (107), and (108); deliver to (110).

110. Two 12-inch elevators with 10-inch buckets, each elevating the ore 44 feet. From (109); deliver to (111).

111. Fourteen-inch Robins conveying and weighing belt with a conveying length of 80 feet, a speed of 300 feet per minute, and run level. From (110); delivers to (112).

112. Automatic sampler, riffle type with 8 divisions. From (111); delivers sample to bucking room, and reject, via chutes, to (113) and (115).

113. Fourteen-inch Robins belt conveyor for distributing to 8 points. Has a conveying length of 135 feet and a speed of 300 feet per minute. From (112); delivers, via trippers, to (114).

114. Shipping bins, 4 to 19 inclusive, for lowly magnetic franklinite products; total capacity 1,200 tons. From (113); deliver, via standard gauge railroad cars and track scales, to market.

115. Shipping bins 1, 2, and 3, for lowly magnetic franklinite products; total capacity 200 tons. From (112); deliver, via standard gauge railroad cars and track scales, to market.

116. Two 14-inch Robins belt conveyors with conveying lengths of 123 feet, speeds of 150 feet per minute, and run level. From (101), (102), (103), (104), (105), (106), (107), and (108); deliver to (117).

117. Two 10-inch elevators with 8-inch buckets, each elevating the ore 41 feet. From (116); deliver to (118).

118. Two Rowand incline screens, *A* and *B*, each 8 sections long by 2 sections wide; plates 12 × 18 inches, with 0.032 × 0.5-inch openings. From (117); *A* delivers oversize to (109) and undersize to (121); *B* delivers oversize to (68) and undersize to (120).

119. Fourteen-inch Robins belt conveyor with a conveying length of 32 feet, a speed of 150 feet per minute, and run level. From (118); delivers to (68).

120. Fourteen-inch Robins belt conveyor with a conveying length of 24 feet, a speed of 150 feet per minute, and run level. From (118); delivers to (121).

121. Ten-inch elevator with 8-inch buckets elevating the ore 34 feet. From (118) and (120); delivers to (122).

122. Fourteen-inch Robins conveying and weighing belt with a conveying length of 63 feet, a speed of 250 feet per minute, and run level. From (121); delivers to (123).

123. Automatic sampler, riffle type with 8 divisions. From (122); delivers sample to bucking room and reject to (124).

124. Shipping bins 1, 2, and 3 (for half and half products containing the slightly magnetic silicate of manganese minerals), with a total capacity of 200 tons. From (123); deliver, via standard gauge railroad cars and track scales, to market.

125. Thirty-two non-magnetic product bins with a total capacity of 40 tons. From (101), (102), (103), (104), (105), (106), (107), and (108). Nos. 1 to 12 inclusive deliver to (126), Nos. 13 to 20 inclusive to (132), and Nos. 21 to 32 inclusive to (135).

Jig and Table Floor.

Separator House A.

126. Twelve No. 5 Wilfley tables without Raff wheels. From (125); deliver concentrates to *A* in (127), middlings to (128), and tailings to *A* in (129). Concentrates and tailings are delivered, via six 2-compartment shaking launders which are 0.5 foot wide by 40 feet long and have slopes of 5.95°.

127. Two shaking launders, Nos. 1 and 2, divided into compartments *A*, *B*, and *C*. Each launder is 1.5 feet wide by 135 feet long. From (126), (131), (132), and (135). No. 1 delivers to (138) and No. 2 delivers to (139).

128. Six Frenier sand pumps, 6 × 44 inches. From (126), (130), and (131); deliver to (130).

129. Two shaking launders, Nos. 3 and 4, divided into compartments *A*, *B*, and *C*. Each launder is 1.5 feet wide by 124 feet long. From (126), (131), (132), and (135); deliver to (143).

130. Six dewatering cones. From (128); deliver pulp to (131) and water to (128).

131. Six No. 5 Wilfley tables without Raff wheels. From (130); deliver concentrates to *A* in (127), middlings to (128), and tailings to *A* in (129). Concentrates and tailings are delivered, via six 2-compartment shaking launders which are 0.5 foot wide by 40 feet long and have slopes of 5.95°.

132. Eight 6-compartment cast-iron New Century differential-motion jigs with screens, 24 × 36 inches. From bins 13 to 20 inclusive in (125) and from (134) via 8 feed hoppers; deliver the first four hutch products, via eight 4-compartment launders, 1 foot wide by 43.75 feet long with slopes of 4.76°, to *B* in (127); last two hutch products, via eight 4-compartment launders, with details like those above, to (133); and tailings, via tailings hoppers and eight 4-compartment launders with details like those above, to *A* and *B* in (129).

133. Eight Frenier sand pumps, 6 × 44 inches. From (132) and (134); deliver to (134).

134. Eight dewatering cones. From (133); deliver pulp, via feed hoppers, to (132) and water to (133).

135. Twelve 6-compartment cast-iron New Century differential-motion jigs with screens as in (132). From bins 21 to 32 inclusive in (125) and from (137) via 12 feed hoppers. Deliver the first four hutch products, via twelve 4-compartment launders, 1 foot wide by 43.75 feet long with slopes of 4.76°, to *C* in (127); last two hutch products, via twelve 4-compartment launders with details like those above, to (136); and tailings, via tailings hoppers and twelve launders with details like those above, to *B* and *C* in (129).

136. Twelve Frenier sand pumps, 6 × 44 inches. From (135) and (137); deliver to (137).

137. Twelve dewatering cones. From (136); deliver pulp, via feed hoppers, to (135) and water to (136).

138. Launder, 0.67 foot wide by 21 feet long with a slope of 5.35°. From *A*, *B*, and *C* of No. 1 in (127); delivers to (140).

139. Launder, 16 feet long with other details as in (138). From *A*, *B*, and *C* of No. 2 in (127); delivers to (140).

140. Four Frenier sand pumps, 10 × 54 inches, making 30 revolutions per minute and lifting against a head of 21.5 feet. From (138) and (139); deliver to (141).

141. Four dewaterers. From (140); deliver willemite product to (142) and water to a water-supply tank.

142. Wet willemite storage bin *B* with a capacity of 25 tons. Size of product is through 0.109 and on 0.010 inch. From (141); delivers to (155) and (156).

143. Two 3-compartment launders, 0.67 foot wide by 17.5 feet long, with slopes of 4.92°. From *A*, *B*, and *C* in both Nos. 3 and 4 of (129); deliver to (144).

144. Six Frenier sand pumps, 10 × 54 inches, making 30 revolutions per minute and lifting against a head of 23 feet. From (143); deliver to (145).

145. Six dewaterers. From (144); deliver water to water-supply tanks and the following products to (146):

A fine tailings	size through	0.042	and on	0.010	inch
B middlings	" "	0.109	" "	0.025	"
C coarse tailings	" "	0.109	" "	0.042	"

146. Six automatic samplers. From (145); deliver samples to bucking room and rejects of fine tailings (*A*) to (147); rejects of middlings (*B*), via valve, either to (147), (151), or (169); and rejects of coarse tailings (*C*) to (151).

147. Fourteen-inch Robins belt conveyor with a conveying length of 76 feet, a speed of 250 feet per minute, and run level. From (146); delivers to (148).

148. Twelve-inch elevator with 10-inch buckets elevating the ore 45 feet. From (147); delivers to (149).

149. Fourteen-inch Robins conveying and weighing belt, with a conveying length of 45 feet, a speed of 250 feet per minute, and run level. From (148); delivers to (150).

150. Fine-tailings shipping bins with a total capacity of 100 tons. From (149); deliver, via standard gauge railroad cars and track scales, to market or storage.

151. Fourteen-inch Robins belt conveyor with details as in (147). From (146); delivers to (152).

152. Twelve-inch elevator with 10-inch buckets elevating the ore 45 feet. From (151); delivers to (153).

153. Fourteen-inch Robins conveying and weighing belt with a conveying length of 45 feet, a speed of 250 feet per minute, and run level. From (152); delivers to (154).

154. Coarse-tailings shipping bins with details as in (150). From (153); deliver, via standard gauge railroad cars and track scales, to market or storage.

155. Twelve-inch elevator with 10-inch buckets elevating the ore 52 feet. From (142); delivers to (158).

156. Fourteen-inch Robins belt conveyor with a conveying length of 42 feet, a speed of 250 feet per minute, and run level. From (142); delivers to (157).

157. Twelve-inch elevator with 10-inch buckets elevating the ore 44 feet. From (156); delivers to (158).

158. Two Rowand 3.5-foot brick tower driers with 10 sections, each 2.5 feet high. From (155) and (157); deliver, via segmental discharge gates, to (159).

159. Two sprocket-chain elevators with 12-inch buckets each elevating the ore 52 feet. From (158); deliver to (160).

160. Fourteen-inch Robins belt conveyor with a conveying length of 38.5 feet, a speed of 250 feet per minute, and an inclination of 15°. From (159); delivers to (161).

161. Fourteen-inch Robins conveying and weighing belt with a conveying length of 75 feet, a speed of 250 feet per minute, and run level. From (160); delivers to (162).

162. Automatic sampler, riffle type with 8 divisions. From (161); delivers sample to bucking room and reject to (163) and, via chute, to (164).

163. Fourteen-inch Robins belt conveyor for distributing to four points, with a conveying length of 68 feet and a speed of 250 feet per minute. From (162); delivers, via tripper, to (164).

164. Five willemite-product steel shipping-tanks with a total capacity of 2,000 tons. From (162) and (163); deliver, via segmental feed gates, to (165).

165. Eighteen-inch Robins belt conveyor with a conveying length of 83 feet, a speed of 300 feet per minute, and run level. From (164); delivers to (166).

166. Eighteen-inch elevator with 16-inch buckets elevating the ore 54 feet. From (165); delivers to (167).

167. Automatic sampler, riffle type with 8 divisions. From (166); delivers sample to bucking room and reject to (168).

168. Hopper of 25 tons capacity, From (167); delivers, via chute, standard gauge railroad cars, and track scales, to market.

Proposed Re-treatment House for Willemite and Calcite Middlings. (Not yet erected and possibly may never be necessary.)

169. Conveying and weighing belt. From (146); delivers to (170).
170. Storage bin of 50 tons capacity. From (169); delivers, via automatic feeders, to (171).
171. Bucket elevator. From (170); delivers, together with water, to (172).
172. Screen. From (171); delivers oversize to (173) and undersize to (176).
173. Rolls. From (172) and (175); deliver crushed ore to (174).
174. Bucket elevator. From (173); delivers to (175).
175. Screen. From (174); delivers oversize to (173) and undersize to (176).
176. Bucket elevator. From (172) and (175); delivers to (177).
177. Screens. From (176); deliver oversize to (178) and undersize to (179).
178. Screen. From (177); delivers oversize and undersize to (179).
179. Six Wilfley tables. From (177) and (178); deliver concentrates to (181), middlings to (180), and tailings to (189).
180. Three Wilfley tables. From (179); deliver concentrates to (181) and tailings to (189).
181. Sand pumps. From (179) and (180); deliver to (182).
182. Dewaterer. From (181); delivers concentrates to (183).
183. Bucket elevator. From (182); delivers to (184).
184. Drier. From (183); delivers to (185).
185. Bucket elevator. From (184); delivers to (186).
186. Conveying and weighing belt. From (185); delivers to (187).
187. Automatic sampler. From (186); delivers sample to bucking room and reject to (188).
188. Willemite-product shipping bins. From (187); deliver, via railroad cars and track scales, to market.
189. Sand pumps. From (179) and (180); deliver to (190).
190. Dewaterers. From (189); deliver tailings to (191).
191. Bucket elevator. From (190); delivers to (192).
192. Conveying and weighing belt. From (191); delivers to (193).
193. Automatic sampler. From (192); delivers sample to bucking room and reject to (194).
194. Tailings-product shipping bins. From (193); deliver, via standard gauge railroad cars and track scales, to market or storage.

The maximum amperes used on the different sized magnets are as follows:

Ampere Turns.	Amperes.
20,000	3
30,000	6
40,000	8
60,000	14
100,000	30

O. MILLS SAVING IRON AND MANGANESE VALUES.

Mill 153 serves as an example of this class.

§ 1485. MILL NO. 153. MAGNETIC SEPARATING PLANT OF THE KRUPP MINING ADMINISTRATION AT KIRCHEN ON THE SIEG, GERMANY. — Spathic iron ore from the Fried. Wilhelm mine, running 31.9% iron and 6.8% manganese, is delivered to the mill which handles 20 tons per 10 hours.[83] The economic minerals are siderite and rhodochrosite.

The ore is roasted and sent to (1).

1. Storage bin. From roaster; delivers to (2).
2. Breaker, 0.25 × 0.4 meter. From (1); delivers crushed ore to (3).

3. Bucket elevator, 15.2 meters long with buckets 300 millimeters wide. From (2) and (5); delivers to (4).

4. Conical trommel with two screening sections having holes 7 and 15 millimeters in diameter. The trommel is 2.66 meters long by 0.77 and 1.145 meters in diameter. From (3); delivers oversize on 15 millimeters to (5), material between 7 and 15 millimeters to (6), and material through 7 millimeters to (6).

5. Rolls, 0.275 × 0.55 meter. From (4) and (8); deliver crushed ore to (3).

6. Two storage bins. From (4); deliver, via percussion feeders, to (7).

7. Forsgren magnetic separator. From (6); delivers strongly magnetic product, as concentrates, to (9); less magnetic product, as middlings, to (8); and non-magnetic product, as tailings, to dump.

8. Hoist with a lifting capacity of 1 metric ton. From (7); delivers to (5).

9. Shipping bin. From (7); delivers to market.

The concentrates contain 44.5% iron and 9.5% manganese, and represent an extraction of 74.1% of the total iron and 73.9% of the total manganese.

Power.

A 38 horse-power portable steam engine furnishes power for the plant, including the running of an 11-kilowatt direct-current dynamo which supplies current, at 110 volts, for the magnetic separator.

P. MILLS SAVING ONLY IRON VALUES.

Mills 154, 155, 156, 157, and 158 are given to illustrate this class in four districts.

§ 1486. MILL NO. 154. OLIVER IRON MINING COMPANY'S PLANT, WASHING MESABI IRON ORES IN THE CANISTEO DISTRICT, COLERAINE, MINNESOTA.[103] — The washing plant in use at present is an experimental one having a capacity of 1,000 tons per shift and located on the shore of Trout Lake.[41] The ores from the Western Mesabi mines are sandy and hence require washing, otherwise they are of Bessemer grade, both at Canisteo and Holman, and excellent for furnace purposes.[106] The present plant is 87 feet long and 73.25 feet high. The problem is to save the iron.

The ore is brought in cars, on a level track, from the skip and dumped into (1).

1. Crude-ore bin, 15 × 28 feet, hoppered two ways to an opening 2.5 feet high by 28 feet long. It is discharged by slushing with water on an apron in front of the bin. This apron has a slope of 25°. From mine skip and (8); delivers, via gate and apron, to (2).

2. Single shell conical screen, 2.5 × 6 × 14 feet long, having a horizontal axis and 2-inch round perforations. Provided with bearings so that it rotates on four rollers. From (1); delivers oversize to (3) and undersize to (5).

3. One 28-inch picking belt, 28.67 feet long, of 8-ply rubber, having a speed of 35 feet per minute. From (2) and (5); delivers hand-picked taconite and waste rock to dump and washing ore to (4).

4. Ore bin having a capacity of 100 tons, hoppered three ways to a 2-foot square gate opening. From (3); delivers, via gate, to (8).

5. Log washers having single rotating shafts with short projecting arms and making 13.5 revolutions per minute. The logs are built up of steel angles and cast-iron paddles with the exception of the first row of paddles which are of cast steel. The steel paddles receive the greatest wear and have to be renewed once for every 30,000 tons of ore put through the washer. The largest particle in the overflows will just refuse to go through a 20-mesh screen. From (2); deliver coarse material to (3) and overflows of fine material to (6).

6. Double inclined cylindrical screen, 4 and 5 feet by 12 feet long, making

13.5 revolutions per minute and having a slope of 1 inch to the foot. The inner screen has oblong holes, 0.375 × 0.625 inch, punched in 0.25-inch steel plate. The outer screen has 0.1875-inch round holes punched in 0.125-inch steel plate. From (5); delivers material finer than 0.25 inch to the blast furnace, material between 0.25 inch and 0.375 inch to (7), and material larger than 0.375 inch to the dump.

7. Turbo, which is an improved form of log washer and is used as a concentrator. (See § 1078.) Water is admitted through openings in the bottom and the ascending water carries off the fine sand. From (6); delivers settled material to the blast furnace and overflow to waste.

8. Fifty-ton skip elevating the ore 73.25 feet. From (4); delivers to (1).

The crude ore averages to run about 41% in iron. The concentrates run from 50 to 58% in iron and tailings, representing from 24 to 30% of the ore mined, average about 26 % in iron. The tailings are finally dumped into Trout Lake.

Labor and Wages.

The mill operates 1 shift per day for 6 days a week. Common labor is paid $2 per day and skilled labor from $2.25 to $3 per day. In September, 1908, there were employed 15 common laborers, 3 firemen, 3 sample men, 1 watchman, 1 engineer, 2 foremen, 1 superintendent, and 1 consulting engineer.

Power and Water.

Power is furnished to the plant by two 18-foot horizontal-firebox boilers for operating the plant proper. Another boiler of the same type is used for hoisting and heating purposes and still another for pumping. Approximately 35 horse-power and 500 gallons of water per minute are required to operate the mill, distributed about as follows:

	Horse-power.	Gallons of Water per Minute.
Conical screen (2)	1	75
Picking belt (3)	2	
Log washers (5)	28	50
Double screen (6)	1	75
Turbo (7)	3	150
Slushing in (1)		150
Totals	35	300

The pumping plant consists of one 25,000-gallon water tank, and one Prescott sinking pump of 500 gallons per minute capacity.

The proposed permanent plant, instead of being located on a hillside, as the present plant, will be built of steel and concrete on level ground and will have a daily capacity of 10,000 tons.

§ 1487. MILL NO. 155. THE LONGDALE IRON COMPANY'S MILL, LONGDALE, VIRGINIA. — The capacity of this mill is about 200 tons per 10 hours (480 tons per 24 hours).[105] The ore consists of the economic mineral limonite, of concretionary structure, in a gangue of clay and shale with sandstone and pebbles. The problem is to save the limonite. The ore is hauled from the adit level of the mine in cars holding about 1 ton each and is dumped upon (1).

1. Flat grizzly with 2-inch spaces between the bars. The ore is hand-picked on the grizzly and the clean lumps broken out by a spalling hammer, while the residue is broken to pass through. From the cars; delivers oversize to (2) and undersize to (3).

2. Bin for clean lumps. From (1); delivers to blast furnace via cars.

3. Bin for milling ore having a capacity of 50 tons. From (1); hauled from 3 to 5 miles in cars of 5.5 tons capacity each and delivered to (4).

4. Two bins having a combined capacity of 95 tons. From (3); deliver, via chute, to (5).

5. Four log washers in pairs. From (4) and (8); deliver concentrates to (6) and tailings to (8).

6. Four trommels with 0.187-inch round holes. From (5); deliver oversize to blast furnace and undersize to (7).

7. Four stationary inclined screens with 14 meshes to the inch. From (6); deliver oversize to blast furnace and undersize to (9).

8. Two stationary inclined screens with 0.187-inch round holes. These screens are used alternately. From (5); deliver oversize to (5) and undersize to (9).

9. Johnson mechanical sand shoveler. From (7) and (8); delivers coarse sands, via cars, to (10) and fine silt and water to (13).

10. Bin. From (9); delivers, via feeder, to (11).

11. Trommel with 4 meshes to the inch to remove any sticks, leaves, etc., which may get into the pulp. From (10); delivers oversize to waste and undersize to (12).

12. Richards' annular classifier. From (11); delivers spigots to blast furnace and overflow to waste.

13. Settling pond. From (9); settlings and water are both allowed to go to waste.

From January 1 to June 1, 1906, the mill handled 30,957.16 tons. Of this, 18,602.04 tons of blast furnace ore were extracted by the log washers and 1,207.40 tons were recovered by the classifier, giving a total extraction of 19,809.44 tons or 64% of the original weight. The ore from the mine averaged 30% iron and the concentrates averaged 45% iron. The tailings ran 10% in iron.

The mill runs 10 hours per day, 6 days per week, except the classifier, which runs 24 hours per day. The labor required is 7 men, 6 around the log washers and 1 around the classifier.

Power.

Power is now supplied by an electric motor run by electricity obtained from a generator at the furnace which is driven by surplus steam from the boilers. The above supplants the old power plant which furnished 25 horse-power for the 4 log washers by a steam engine, showing an average coal consumption for 6 days of 2,750 pounds per 10 hours and requiring 1 man's time. The steam plant is still maintained, to be used in case of accident to the electrical power.

The water flows to the mill by gravity. The amount of water flowing away from the sand shoveler is 700 gallons per minute; from the classifier spigot, 14.9 gallons; and from the classifier overflow, 80.1 gallons. This makes a total of 795 gallons per minute in addition to that required for the boilers and that contained in the concentrates.

§ 1488. MILL NO. 156. CRANBERRY MILL, CRANBERRY, NORTH CAROLINA. — This mill has a capacity of about 350 tons of crude ore in 10 hours.[81] The economic mineral is magnetite in a gangue composed principally of hornblende, having some epidote and a little quartz and feldspar. The problem is to save the magnetite. Clean coarse rock is supposed to be loaded by itself in the mine and sent to the dump. All other material, including coarse and fines alike, is loaded indiscriminately and sent to (1).

1. Gates breaker, No. 8. with drive pulley making 350 revolutions per minute. A Gates breaker was selected for this position, where it is necessary

to handle mixed fine and coarse stuff, because it has little of the tendency to choke which reciprocating breakers show under like treatment. The breaker is kept set up so that as little as possible of ore larger than 3.5-inch cubes is made. The principal use of the lower section of trommel (2) is to keep check on the breaker in this respect. From mine cars; delivers crushed ore to (2).

2. Cylindrical trommel, 2.67 × 14 feet, with 2 sections, the upper having 1.75-inch round holes punched in steel and the lower section having 3.5-inch round holes punched in steel. Makes 18 revolutions per minute and has a slope of 1.5 inches to the foot. From (1); delivers oversize to (4), undersize from the first section to (5), and from the second section to (3).

3. Two cobbing magnets. From (2); deliver magnetic concentrates to coarse-ore pocket and non-magnetic and lean tailings to (4).

4. Gates breaker, No. 3, breaking through a 1.75-inch round hole and the drive pulley making 425 revolutions per minute. From (2) and (3); delivers crushed ore to (5).

5. Two double log washers. From (2) and (4); deliver clean washed ore to (6) and washer-tailings to the dump. These tailings carry nothing worth saving except a small amount of very fine magnetite. This magnetite would probably pass a 40 or 50 mesh and is carried off in the muddy water.

6. Two trommels making 14 revolutions per minute and having slopes of 1 inch to the foot. Each trommel consists of 3 concentric conical screens. The inner screens have 1.25-inch round holes, the middle screens have 0.625-inch round holes, and the outer screens have oblong holes, 0.375 × 0.1875 inch. From (5); deliver oversize on coarse screens to (7), oversize on middle screens to (8), oversize on outer screens to (9), and undersize of outer screens to (10).

7. Two coarse magnets. From (6); deliver magnetic concentrates to cars and non-magnetic and lean tailings to (11).

8. Two Cranberry magnets. From (6); deliver magnetic concentrates to cars and non-magnetic and lean tailings to (13).

9. Wet magnet. From (6); delivers magnetic concentrates to cars and non-magnetic tailings, via launder, to dump.

10. Wet magnet. From (6); delivers magnetic concentrates to cars and non-magnetic tailings, via launder, to dump.

11. Conveyor. From (7); delivers to (12).

12. Coarse-tailings magnet. From (11); delivers magnetic concentrates to cars and non-magnetic tailings to dump.

13. Magnet for re-treating tailings. From (8); delivers magnetic concentrates to cars and non-magnetic tailings to dump.

The mill operates one 10-hour shift per day for 6 days a week, and yields about 240 tons of concentrates per 10 hours.

§ 1489. MILL NO. 157. CONCENTRATING MILL OF THE WHARTON STEEL COMPANY, WHARTON, NEW JERSEY. — This mill handles 360 tons of crude ore per 24 hours. The ore, running from 38 to 40% in iron and having a maximum size of 10-inch cubes, passes from a 200-ton bin in the Wharton mines, Hibernia, New Jersey, via skip, to a chute on the tunnel level. It then runs, by gravity, into cars, standing on the tracks of the underground (tunnel) railroad, and is thus transported to and dumped into (1), at the concentrator near the mines.

1. Bin of 600 tons capacity. From the mines; delivers to (2).

2. Buchanan jaw breaker wth a 16 × 24-inch jaw opening, a speed of 225 thrusts per minute, and set to break to 2.5-inch cubes. One set of manganese-steel jaw plates have crushed 250,000 tons of ore and are still in fair condition. From (1); delivers crushed ore to (3).

3. Elevator with a 15° slope and 9 × 16-inch buckets of No. 10 steel which have elevated 250,000 tons of ore 55 feet and are still in good condition. The

upper pulley is 24 and the lower pulley 30 inches in diameter. From (2) and (6); delivers to (4).

4. Grizzly with 0.75-inch spaces between the bars. From (3); delivers oversize to (5) and undersize, via gravity, to (21).

5. Screen, 4 feet square, with 2.5-inch round holes. Made by the Hendrick Manufacturing Company. From (4); delivers oversize to (6) and undersize to (7).

6. Buchanan rolls, 18 × 36 inches, having a speed of 125 revolutions per minute and set to crush to 1.25 inches. The shells are made of chilled cast iron at the foundry of the Wharton furnaces and will handle about 100,000 tons before being worn out. From (5); deliver crushed ore to (3).

7. One Wharton magnetic cobber running at 23 revolutions per minute under 25 amperes and 110 volts. From (5); delivers concentrates, via gravity, to (8) and tailings to (10).

8. One Wharton magnetic cobber running at 23 revolutions per minute under 12 amperes and 110 volts. From (7) and (22); delivers concentrates to (9) and tailings, via gravity, to (12).

9. Elevator with 5 × 10-inch buckets of No. 14 steel which have moved 125,000 tons of ore and are still in good condition. The upper pulley is 20 and the lower pulley 24 inches in diameter. From (8), (15), (19), and (25); delivers to (26).

10. One 16-inch belt conveyor with a 5-ply rubber belt made by the Revere Rubber Company. It has a conveying length of 109 feet, a speed of 150 feet per minute, and has handled 125,000 tons of ore. From (7), (14), and (25); delivers to (11).

11. Sizing screen. From (10); delivers various sizes of rock for road building and concrete work.

12. Hoagland rolls, 14 × 30 inches, set 0.625 inch apart. From (8); deliver crushed ore to (13).

13. Elevator with 7 × 12-inch buckets of No. 12 steel and other details as in (9). From (12); delivers to (14).

14. One Wharton magnetic cobber with details as in (7). From (13); delivers concentrates, via gravity, to (15) and tailings to (10).

15. One Wharton magnetic cobber with details as in (8) except that but 11 amperes are used. From (14); delivers concentrates to (9) and tailings, via gravity, to (16).

16. Hoagland rolls, 14 × 30 inches, set 0.25 inch apart. From (15); deliver crushed ore to (17).

17. Elevator with details as in (9). From (16); delivers to (18).

18. Screen, 2.5 × 5 feet with 0.25-inch round holes. Made by the Hendrick Manufacturing Company. From (17); delivers oversize, via gravity, to (20) and undersize, via gravity, to (19).

19. One Wharton magnetic cobber running at 23 revolutions per minute under 10 amperes and 110 volts. From (18); delivers concentrates to (9) and tailings, via gravity, to (20).

20. Hoagland rolls, 14 × 30 inches, set close. From (18) and (19); deliver crushed ore to (24).

21. Screen, 2.5 × 5 feet with 0.5-inch round holes. Made by the Hendrick Manufacturing Company. From (4), fed with ore containing from 10 to 15% moisture; delivers oversize to (22) and undersize to (23).

22. Conveyor. From (21); delivers to (8).

23. Drier. From (21); delivers dry ore to (24).

24. Elevator with details as in (9) except as to the amount of ore handled. From (20) and (23); delivers to (25).

25. One Wharton magnetic cobber with details as in (19). From (24); delivers concentrates to (9) and tailings to (10).

26. Storage bin having a capacity of 500 tons and situated alongside the railroad track. From (9); delivers, via gravity, to cars and thence to furnaces.

The following table gives an idea of the results obtained:

Material.	Percent Weight.	Percent Iron.	Percent Phosphorus.
Feed	100	38 to 40	0.04
Concentrates	40	63 to 64	0.008
Middlings	20	40	.....
Tailings	40	5 to 6	.....

All the elevator buckets have lasted two years.

The magnetic cobbers were made by the Wharton furnaces.

The method of ore treatment is covered by patent.

Labor and Wages.

This mill operates one 6-hour shift per 24 hours for 6 days a week. The following men and wages apply per shift:

One foreman	at $2.25	$2.25
One engineer	at 1.70	1.70
One fireman	at 1.53	1.53
Five mill men	at 1.50	7.50
Totals, eight men	at $1.62	$12.98

Power.

The total power required is 175 horse-power. This includes the running of a 25-kilowatt generator to supply a 125-volt direct current for the magnetic cobbers.

§ 1490. MILL NO. 158. WITHERBEE, SHERMAN, AND COMPANY, INC., MINEVILLE, ESSEX COUNTY, NEW YORK. — This company operates two mills,[61 63] for the magnetic concentration of iron ore, called No. 1 and No. 2 Mills respectively.[189]

No. 1 Mill treats 700 tons in 10 hours, of the ore from the "Harmony" mines hoisted through "A" shaft and "B" shaft. The mill feed averages 52% in iron and 0.3% in phosphorus. When the demand for ore crowds No. 1 Mill to its capacity, the ore from "B" shaft is crushed at the shaft house and a first separation made there, at the "Cobbing Plant" described below. When the "Cobbing Plant" is in operation, from one-third to one-half of the "B" shaft ore is shipped as "Harmony cobbed."

No. 2 Mill treats 800 tons in 10 hours, of the ore from the "Old Bed" mine "Joker," and "Bonanza" shafts, and also some of the ore from the "Smith mine." The mill feed averages 57% in iron and 1.5% in phosphorus.

The economic minerals are magnetite and apatite. The magnetite is mined from the gneiss formation and apatite constitutes a large part of the gangue, the remainder being silica, feldspar, and hornblende. Besides those already mentioned, there are about 27 other minerals to be found in the mines.

No. 1 mill is the older and many changes have been made in it since first built. The arrangement is not ideal, still, as at present laid out, it is very flexible to adjust to varying conditions.

The problem of separating the phosphorus from the iron ore requires the elimination of the apatite or phosphorus-bearing gangue, which, being practically non-magnetic, determines the method of treatment required.

Cobbing Plant.

This is located at "B" shaft. When the magnetite of the crude ore is in the form of large crystalline fragments, which break free from the rock, it can be readily handled by cobbing and a shipping product obtained carrying lumps up to 2.5 inches in size and running, on an average, 62% in iron and 0.15% in phosphorus.[60] From the mine skips the ore goes to (1).

1. Grizzly with 1.5-inch spaces between the bars. From the mine; delivers oversize to (2) and undersize to (3).

2. Blake breaker, with an 18 × 30-inch jaw opening, breaking to 2.5 inches. Weighs 29 tons and is driven by a 100 horse-power General Electric motor, form "17," class 6-100-500, with form "T" controller and operating at 440 volts. From (1); delivers crushed ore to (3).

3. Twenty-inch Robins belt conveyor which is head driven and has a slope of 15°. From (1) and (2); delivers to (4).

4. Bin, situated over (5). From (3); delivers to (5).

5. One Ball and Norton single-drum magnetic separator[58] containing 16 poles carrying 400 turns of No. 11 wire. Uses 7.5 amperes at 110 volts. A 30-inch brass drum, with an 18-inch face, revolves about the poles. From (4); delivers concentrates to (6), and tailings to (7).

6. Twenty-inch Robins belt conveyor which is head driven and has a slope of 18°. From (5); delivers to (8).

7. Twenty-inch Robins belt conveyor with details as in (6) and running parallel to (6) with a walk between. From (5); delivers to (9).

8. Concentrates bins for "Harmony cobbed." From (6); deliver, via standard gauge railroad cars and scales, to furnaces.

9. Tailings bins. From (7); deliver to (10).

10. Standard gauge steel hopper-bottomed cars called "jimmies." From (9); deliver, via scales, to (11).

Mill No. 1.

11. Bin. From the "A" and "B" shafts and (10); delivers, via chute, to (12).

12. Blake breaker, with an 18 × 30-inch jaw opening, breaking to 3 inches, and making 234 thrusts per minute. Weighs 29 tons. From (11); delivers crushed ore to (13).

13. Twenty-inch Robins belt conveyor with a slope of 15°. From (12); delivers to (14).

14. Grizzly, 2 × 4 feet, with 2-inch spaces between the 1.5-inch bars which are set at an angle of 38°. From (13); delivers oversize to (15) and undersize, via chute, to (18).

15. Screens, 1.5 × 4 feet × 0.75 inch thick, of manganese-steel plates with 0.75 × 1.25-inch holes. From (14); deliver oversize to (16) and undersize to (17).

16. Three Gates breakers. One style, "D" No. 3, making 370 revolutions per minute and two, style "H" No. 5, making 570 revolutions per minute. Both break to 1.5 inches. From (15); deliver crushed ore to (17).

17. Twenty-inch Robins belt conveyor. From (15), (16), and (18); delivers to (20).

18. One Ball and Norton single-drum magnetic separator. From (14); delivers concentrates, via chute, to (19) and tailings, via chute, to (17).

19. Twenty-inch Robins belt conveyor. Head driven. From (18); delivers, via chute, to (43).

20. Twenty-inch Robins belt conveyor. From (17); delivers to (21).

21. Twenty-inch Robins belt conveyor. From (20); delivers to (22).

22. Drier which is a vertical shaft in two compartments, the drier and the chimney, connected by two openings. The chimney has a damper on the top which is opened if the ore gets too hot. The drier stack is 4.75 feet square inside, filled with cast-iron tees, 5 inches wide on the top face with a shallow stem, for stiffness. They are placed 4 inches apart and the rows are 6 inches apart vertically. The bars are staggered, each row coming below the openings between the bars above. Every six rows are placed at right angles to the six above and below. The ore piles up on the bars until it rolls off and it then falls to the next in a zigzag motion through the hot gases ascending from the furnace. The furnace has a grate surface of 6 square feet and is built on the side with a bridge wall between it and the drier. From (21); delivers dried ore, via chute, to (23).

23. Sixteen-inch elevator with a 10-ply cotton belt, a speed of 275 feet per minute, and steel buckets, 7 × 8 × 12 inches, elevating the ore 32 feet. Head driven, the head pulley being 2.5 feet in diameter. From (22); delivers, via chute, to (24).

24. One Ball and Norton single-drum magnetic separator. From (23); delivers concentrates to (43) and tailings, via chute, to (25).

25. Anaconda rolls, 15× 40 inches, with chrome-steel shells and making 54 revolutions per minute. From (24); deliver crushed ore to (26).

26. Sixteen-inch elevator with a 10-ply cotton belt and steel buckets, 7 × 8 × 12 inches, set 18 inches apart, and elevating the ore 60 feet. From (25) and (30); delivers to (27).

27. Tower screens with 1.5 × 2-foot plates of Hendrick steel, 0.1875 inch thick with 0.25 × 0.5-inch openings. The plates are set at an angle of 38° and have a total area of 276 square feet. From (26); deliver oversize, via chute, to (28) and undersize, via two chutes, to (31).

28. Anaconda rolls, 15 × 40 inches, making 54 revolutions per minute. From (27); deliver crushed ore to (29).

29. Twenty-inch Robins belt conveyor. From (28); delivers to (30).

30. Sixteen-inch Robins belt conveyor. From (29) and (46); delivers to (26).

31. Two bins. From (27); deliver to (32).

32. Two Ball and Norton belt-type magnetic separators. From (31); deliver concentrates to (43) and tailings, via two chutes, to (33).

33. Sixteen-inch Robins belt conveyor. From (32); delivers to (34).

34. Fourteen-inch elevator which elevates the ore 32 feet. From (33); delivers to (35).

35. Dividing box. From (34); delivers, via two chutes, to (36).

36. Two Reliance rolls, 14 × 36 inches, with Latrobe steel shells and making 88 revolutions per minute. From (35); deliver crushed ore to (37).

37. Two 16-inch Robins belt conveyors. From (36); deliver to (38).

38. Sixteen-inch Robins belt conveyor. From (37); delivers to (39).

39. Sixteen-inch Robins belt conveyor. From (38); delivers to (40).

40. Twelve-inch elevator, with an 8-ply cotton belt and steel buckets, 6 ×6 × 8 inches, elevating the ore 18.5 feet. From (39); delivers, via chute, to (41).

41. Bin. From (40); delivers, via two chutes, to (42).

42. Two Ball and Norton belt-type magnetic separators. From (41); deliver concentrates to (43) and tailings to (45).

43. Twenty-inch Robins belt conveyor. Head driven. From (19), (24), (32), and (42); delivers to (44).

44. Sixteen-inch Robins belt conveyor. From (43); delivers to (51).

45. Sixteen-inch Robins belt conveyor. From (42); delivers to (46).

46. One Ball and Norton "M" type magnetic separator which has magnets

of high flux density to pick up particles of gangue carrying magnetite which the previous belt-type machines have discarded. From (45); delivers concentrates to (30) and tailings to (47).

47. Sixteen-inch Robins belt conveyor. From (46); delivers to (48).

48. Box. From (47); delivers, via chutes, to either (49) or (50).

49. Sixteen-inch Robins belt conveyor. From (48); delivers tailings for shipment.

50. Sixteen-inch Robins belt conveyor. Head driven. From (48); delivers tailings to the tailings pile.

51. Concentrates shipping bin. From (44); delivers to furnaces.

The concentrated iron ore will run about 62% in iron and 0.15% in phosphorus and represents about 80% of the material treated. Nearly 65% of the concentrates are coarser than 20 mesh. The tailings will run about 9% in iron and represent about 20% of the crude ore. These tailings are used for the manufacture of concrete blocks, for which purpose a Hercules cement-stone machine is installed. Concrete, made from these tailings, is one-tenth stronger than when sand is used.

The concentrates can be kept at any desired analysis, from 58 to 65% in iron, by simply adjusting the current carried by the separators and using the proper size screen openings. By changing the screens so that the ore is ground finer, the concentrates can be re-run and the iron concentrates raised to 71% in iron. This has been done on several carloads needed for special purposes.

During April, 1908, this mill treated 13,245 tons of crude ore.[67] It operates one 10-hour shift per day for 6 days a week and employs 18 men. In the same month the mill was running 212 hours. It was idle 25 hours for repairs, 14 hours because of no ore, and 1 hour because of no power.

Power.

The total power used in April, 1908, was 27,080 kilowatt hours or the power required was 171 horse-power. No. 1 Mill has the following motors.

One 6-pole, 60 horse-power, Form "K," General Electric induction motor using an alternating current, 25 cycle, 3 phase at 440 volts and making 500 revolutions per minute.

Two 6-pole, 75 horse-power, Form "M" motors of same make, current, and speed.

One 6-pole, 75 horse-power, Form "K" motor of same make, current, and speed.

One 6-pole, 60 horse-power, Form "K" motor of same make, current, and speed, which is belted to one 4-pole, sixty horse-power General Electric motor, making 880 revolutions per minute and used as a generator to supply a 230-volt direct current to the separator magnets in both mills. The motors in both mills are located in a motor room partitioned off to keep the dust and grit from the bearings as much as possible.

Mill No. 2.

The ore is brought from the "Joker" and "Bonanza" shafts in standard gauge "jimmies" holding about 8 tons each, and, after being weighed by a set of Fairbanks track scales, of 45 tons capacity, is delivered to (52).

52. Bin with a hinged steel-chute to control the discharge. From the mine; delivers, via chute, to (53).

53. Blake breaker, with an 18 × 30-inch jaw opening, breaking to 3 inches and making 250 thrusts per minute. Weighs 29 tons. From (52); delivers crushed ore to (54).

54. Twenty-inch Robins belt conveyor with a 4-ply rubber belt having a 0.125-inch rubber cover, a conveying length of 59 feet, a speed of 484 feet per minute, a capacity of about 90 tons per hour, a life of about 1,460 hours, and a slope of 16°. Head driven. From (53); delivers to (55).

55. Screen made up of four 1.5 × 4-foot manganese-steel plates, 0.75 inch thick with 0.75 × 1.25-inch openings and having slopes of 39.5°. From (54); delivers oversize to (56) and undersize to (57).

56. Blake double-jaw breaker, with 6 × 36-inch jaw openings, breaking to 1.5 inches and making 292 thrusts per minute. From (55); delivers crushed ore to (57).

57. Twenty-inch Robins belt conveyor with a 4-ply rubber belt having a conveying length of 65 feet, a speed of 418 feet per minute, a capacity of about 90 tons per hour, and a slope of 19.5°. From (55) and (56); delivers to (58).

58. Screen made up of 1.5 × 4-foot manganese-steel plates, 0.75 inch thick with 0.75 × 1.25-inch openings and having slopes of 38°. From (57); delivers oversize to (59) and undersize to (63).

59. Dividing box. From (58); delivers, via two chutes, to (60).

60. Two 16-inch Robins belt conveyors. From (59); deliver to (61).

61. Two Anaconda rolls, 15 × 40 inches, making 60 revolutions per minute and set 0.5 inch apart. From (60); deliver crushed ore to (62).

62. Twenty-inch Robins belt conveyor with a slope of 16.5° and head driven. From (61); delivers, via chutes, either to (63) or (65).

63. Eighteen-inch elevator with a 10-ply cotton belt having a speed of 300 feet per minute and steel buckets, 7 × 8 × 12 inches, set 18 inches apart. Head driven. From (58) and (62); delivers to (64).

64. Drier with details as in (22). From (63); delivers dry ore to (65).

65. Sixteen-inch Robins belt conveyor with a 4-ply rubber belt run level at a speed of 500 feet per minute, having a conveying length of 35 feet, a capacity of 90 tons per hour, and an average life of 820 hours. Tail driven. From (62), (64), and (73); delivers to (66).

66. Screen made up of three 1.5 × 2-foot, sheet-steel plates having 0.1875 × 0.75-inch openings and a total screening surface of 9 square feet. From (65) and (75); delivers oversize to (69) and undersize to (67).

67. Sixteen-inch elevator with a 10-ply cotton belt having a speed of 189 feet per minute and steel buckets, 7 × 8 × 12 inches, elevating the ore 14 feet. From (66); delivers to (68).

68. One Ball and Norton belt-type magnetic separator with a capacity of 15 tons per hour. From (67); delivers concentrates, via chute, to (81) and tailings to (69).

69. Twenty-inch elevator with a 10-ply cotton belt having a speed of 275 feet per minute and steel buckets, 6 × 7 × 16 inches, elevating the ore 70 feet. From (66) and (68); delivers to (70).

70. Tower screens made up of stationary Hendrick perforated steel plates, each 1.5 × 2 feet, set at an angle of 38°. There are four sets of screens making five sizes of products. Each size of screen is made up of 11 plates and there are 66 square feet of screening surface to each screen, or 264 square feet in all. The following size openings are used, but are sometimes varied to suit conditions, according to the character of the ore received or the products desired: the first size is 0.094 × 0.5 inch; the second, 0.1875 × 0.75 inch; the third, 0.25 × 0.5 inch; and the fourth, 0.375 × 0.75 inch. From (69); deliver the different undersizes to (76) and the oversize to (71).

71. Fourteen-inch Robins belt conveyor having a conveying length of 40 feet and a slope of 14°. Head driven. From (70); delivers to (72).

72. Dividing box. From (71); delivers, via two chutes, to (73).

73. Two Reliance rolls, 14 × 36 inches, making 76 revolutions per minute. From (72); one delivers crushed ore to (74) and the other to (65).

74. Sixteen-inch Robins belt conveyor having a conveying length of 15 feet. From (73); delivers to (75).

75. Sixteen-inch Robins belt conveyor having a conveying length of 16 feet. From (74), delivers to (66).

76. Four bins. From (70); deliver, via roller feeders, to (77).

77. Five Ball and Norton belt-type magnetic separators. Each has 12 poles wound with 200 turns of No. 11 enameled wire carrying a maximum current of 9 amperes and, at present, using 200 volts. One hundred and ten volts have been used when more convenient. The separators are connected with resistance boxes which control the current that can be cut down to 3 amperes when desired. The distance between the feed belt and magnets is about 1 inch, but this distance is adjustable and by varying this, as well as the current, the iron contents of the concentrates can be varied at will. From (76), two separators working on the finest size; deliver concentrates to (78) and tailings to (79).

78. Twenty-inch Robins belt conveyor having a conveying length of 37 feet and a life of about 5 years. From (77); delivers to (98).

79. Fourteen-inch Robins belt conveyor running level at a speed of 320 feet per minute, having a conveying length of 47 feet, and a life of about 5 years. From (77); delivers to (80).

80. One Ball and Norton belt-type magnetic separator. Conveyor (79) becomes the feed belt for this separator by substituting a roller, with a spreading device over the belt, for a troughing idler, near the discharge end. This separator recovers ore which may have passed the other machines due to too heavy a feed or any other causes. From (79); delivers concentrates to (81) and tailings to (83).

81. Sixteen-inch Robins belt conveyor. From (68) and (80); delivers to (82).

82. Sixteen-inch Robins belt conveyor with a conveying length of 55 feet. From (81); delivers to (98).

83. Fourteen-inch Robins belt conveyor having a conveying length of 19 feet, a speed of 234 feet per minute, and a slope of 20.5°. From (80); delivers to (84).

84. Eighteen-inch elevator with a 10-ply cotton belt having a speed of 250 feet per minute and steel buckets, 6 × 6 × 10 inches, elevating the ore 44 feet. From (83); delivers to (85).

85. Tower screens made up of stationary perforated steel plates, each 1.5 × 2 feet, set at an angle of 38 °. There are two sets of screens making three sizes of products. Each size of screen is made up of 12 plates and there are 36 square feet of screening surface to each screen or 72 square feet in all. The first size has 0.031 × 0.5-inch holes, and the second size has 0.063 × 0.5-inch holes. From (84); deliver material through the first size to (89), material through the second size to (91) and (93), and the oversize to (86).

86. Fourteen-inch Robins belt conveyor. From (85); delivers to (87).

87. Traylor high-speed rolls, 10 × 32 inches, making 235 revolutions per minute. From (86); deliver crushed ore to (88).

88. Sixteen-inch Robins belt conveyor. From (87); delivers, via chute, to (95).

89. Bin. From (85); delivers to (90).

90. One Norton type "M" magnetic separator which is made up of powerful magnets having 420 turns of No. 11 enameled wire, carrying 7.5 amperes, at 200 volts. The top pieces, connecting the magnets, are also wound with

200 turns of the same wire and carry the same current. This separator picks up all material having any particles of magnetite attached, considerable hornblende, and some of the red crystals of apatite. From (89); delivers concentrates to (95) and apatite to (102).

91. Bin. From (85); delivers to (92).

92. Wetherill type "E" magnetic separator. From (91); delivers concentrates to (95), apatite to (102), and tailings to (99).

93. Bin. From (85); delivers to (94).

94. Wetherill type "E" magnetic separator. From (93); delivers concentrates to (95), apatite to (102), and tailings to (99).

95. Fourteen-inch Robins belt conveyor with a conveying length of 27 feet. From (88), (90), (92), and (94); delivers to (96).

96. Ten-inch elevator, 18 feet high. From (95); delivers to (97).

97. One Ball and Norton belt-type magnetic separator. From (96); delivers concentrates to (98) and tailings to (99).

98. Twenty-inch Robins belt conveyor having a conveying length of 119 feet, a speed of 262 feet per minute, and a slope of 5.5°. Head driven. From (78), (82), and (97); delivers to (104).

99. Fourteen-inch Robins belt conveyor. From (92), (94), and (97); delivers to (100) or (101).

100. Fourteen-inch Robins belt conveyor. From (99); delivers to the tailings pile.

101. Fourteen-inch Robins belt conveyor. From (99); delivers to (105).

102. Fourteen-inch Robins belt conveyor. From (90), (92), and (94); delivers to (103).

103. Fourteen-inch Robins belt conveyor. From (102); delivers to (106).

104. Concentrates shipping bin. From (98); delivers, via cars and scales, to furnaces. Used for foundry pig and basic steel production.

105. Tailings shipping bin. From (101); delivers tailings to tailings pile.

106. Apatite shipping bin. From (103); delivers, after weighing, apatite for fertilizers running from 45 to 50% bone phosphate.

Most of the time separators (92) and (94) will produce apatite running higher in phosphorus than the separator (90) whose product runs about 45% bone phosphate. (90), however, will handle 4 times as much as either (92) or (94). Part of the time, when a larger proportion of the apatite is slightly magnetic, separators (92) and (94) throw it out with the hornblende. Then the product of (90) will be higher in phosphorus than either (92) or (94).

Experience at this plant has shown that the coarse material does not carry enough moisture to interfere with a good separation, and consequently only the fines are put through the drier (64) ordinarily. It was found that in very cold weather, when all the ore was passed through the drier, all the heat available from the grate surface would only warm the ore to the melting point of the frost. By keeping out the coarse material the fines could be dried nicely and, the coarse being delivered to the conveyor before it reached the drier, formed an effective protection to the belt from the hot material of the drier.

A peculiar feature of mill construction occurs at this plant. The screen (66), elevator (67), and separator (68) were put in for additional separating capacity and to relieve elevator (69) of a part of the load. This works out very satisfactorily as the screen (66) removes just about enough feed for (68). A very good layout for a mill could be made with this arrangement in series, thus avoiding high elevators and screens and, consequently, saving mill height.

The iron concentrates will run about 65.5% in iron and 0.8% in phosphorus and represent 85% of the material treated. The apatite concentrates contain about 10% phosphorus, equivalent to 50% bone phosphate, and represent

7.5% of the material treated. The other 7.5% of the material treated is in the tailings which run about 12% in iron.

During April, 1908, this mill treated 18,026 tons of crude ore. It operated one 10-hour shift per day for 6 days a week, and employed 22 men. In the same month the mill was running 205.5 hours. It was idle 33.5 hours for repairs, 10 hours because of no ore, and 3 hours because of no power.

Power.

The total power used in April, 1908, was 22,310 kilowatt hours or the power required was 145 horse-power. Mill No. 2 has the following motors.

Two 6-pole, 100 horse-power, Form "M" General Electric induction motors using an alternating current, 25 cycle, 3 phase at 440 volts and making 500 revolutions per minute.

One 6-pole, 60 horse-power, Form "K" motor of same make, current, and speed.

One 6-pole, 15 horse-power, Form "K" motor of same make, current, and speed.

The latest motors installed have been Form "M" having collector rings on account of the great starting torque obtainable. This is needed to start the mill, particularly in cold weather when the belts have become stiff. On this account the motor capacity is nearly double the average power used.

Electrical power costs approximately one cent per horse-power hour.

Power for both mills and the mines is furnished by two water-power plants and three steam plants.

The water-power plant at Wadham's operates under a head of 48 feet and has a generator of 300 kilowatts capacity, while the one at Kingdom has a head of 290 feet and a generator capacity of 375 kilowatts. At present the combined water-power plants furnish about 450 kilowatts which is transmitted, at 6,600 volts, to the mines.

The steam plant at Port Henry, New York, on Lake Champlain, consists of one 800-kilowatt Curtis turbine; a 2-pole, 800-kilowatt generator, generating a 25-cycle, 3-phase current at 6,600 volts, and making 1,500 revolutions per minute; one 2,500 square-foot surface condenser with auxiliaries; four 250 horse-power Babcock and Wilcox boilers with superheaters; one 25-kilowatt Turbo exciter set; and one 20-kilowatt motor-generator set. The power lines are carried 4 miles to a sub-station at the mines from whence step-down transformers distribute the current at 3,300 volts.

The steam plant in the Central Power House, at the mines, consists of one 750-kilowatt alternating-current, 3,300-volt generator direct connected to a 1,200 horse-power compound Corliss condensing engine with suitable accessories. The current from the central plant is joined to that from Port Henry and the two water powers and distributed on the same wires, after leaving the transformers which reduce the voltage to 3,300 volts, and carried to points where the motors are located, when it is further reduced to 440 volts by transformers near the motors.

Water.

The water supply system affords water, by gravity, for fire protection, drinking water, and boilers.

The reservoir is located 0.75 mile from the Old Bed power house and 100 feet above it. The water is unusually soft, and it leaves a scale in the boilers, after two years' use, of not over 0.125-inch thickness.

Q. Mills Saving Iron and Copper Values.

Mill 159 is the only one of this type given.

§ 1491. Mill No. 159. Lebanon Plant of the Pennsylvania Steel Company, Lebanon, Pennsylvania.[115] — This plant has a capacity of 975 tons per 24 hours.[16] The ore comes from the Cornwall deposits and occurs as soft deposits of magnetite resting against igneous dikes. It is low in phosphorus and is used in making Bessemer pig iron. The economic minerals are magnetite, chalcopyrite, and pyrite in a gangue of limestone and sandstone slate. The crude ore runs about 42% iron, 2% sulphur, and 0.45% copper. The problem is to save the iron and copper.[79]

Crushing Plant.

The ore comes to the plant, via railroad cars with drop bottoms, and is delivered, through a chute 4 feet wide with a steel-plate bottom, to (1).

1. One No. 6 "K" Gates breaker breaking to 2.5 inches, making 350 revolutions per minute, and having a capacity of 1,000 tons per 24 hours. Requires 2 men per shift to attend it and the rings and dies have a life of 1 year. From the railroad cars; delivers crushed ore to (2).

2. Grizzly, 4.5 feet long, having a slope of 45°, and 0.5 × 2-inch bars, set 1 inch apart and running crosswise. From (1); delivers oversize, via shaking feeder, chute, and roller, to (3) and undersize to (4).

3. One set of Anaconda-type rolls, 15 × 40 inches. Have fixed and movable roll with springs. Crush to 0.625 inch and make 45 revolutions per minute. From (2); deliver crushed ore to (4).

4. Robins 16-inch rubber belt-conveyor with a conveying length of 200 feet, a slope of 22°, a speed of 300 feet per minute, and a capacity of 1,000 tons per 24 hours. From (2) and (3); delivers to (5).

Concentrating Plant.

5. Wooden bin of 2,000 tons capacity with a flat bottom. From (4); delivers, via 4 rollers 3 feet in diameter, to (6) and, via 2 shaking feeders, to (8).

6. Four 5-foot wet ball mills. Inside diameter 5 feet and outside length 7 feet. Crush to 1.5 millimeters. Two hundred cast-iron balls, 6 inches in diameter and weighing 30 pounds each, are put into the mill at the start and 2 or 3 new ones are added each day to keep the charge up to weight. For good work there should be a mixture of large and small balls at all times. Manganese-steel linings were used, but in 3 or 4 months' time they wore from 4 inches thick to 2.5 inches and had to be discarded. Chilled-iron linings are now being used and last from 8 to 12 months. The capacity of each is from 100 to 125 tons per 24 hours. Punched plate, with holes 0.625 inch in diameter, is used for chip screens. Speed 20 revolutions per minute. Fed at one end and discharged at the other. From (5); deliver crushed ore to (7).

7. Five double Gröndal magnetic separators. Stationary magnets surrounded by revolving laminated drums. The speed of the drums is 90 revolutions per minute. Current 4.5 amperes and voltage from 220 to 250 volts. There are 20,000 ampere turns to each drum and the 2 drums are connected up in series. It requires 1.3 horse-power for the magnets and from 1.5 to 3 horse-power to revolve the drums. From (6); deliver magnetic or iron product to (20) and non-magnetic product to (21).

8. Two trommels, 3 × 7 feet, having punched-plate screens with holes 5 millimeters in diameter, slopes of 0.625 inch to the foot, speeds of 20 revolutions per minute, and capacities of from 100 to 200 tons per 24 hours. From (5); deliver oversize to (9) and undersize to (10).

9. One set of Anaconda-type rolls, 15 × 40 inches, crushing to a maximum of 0.625-inch cubes, making 60 revolutions per minute, and having a capacity of from 400 to 500 tons per 24 hours. For other details see (3). From (8); deliver crushed ore to (11).

10. Two trommels, 3 × 7 feet, with holes 1.5 millimeters in diameter. Other details like (8). From (8); deliver oversize to (16) and undersize to (19).

11. Three trommels, 3 × 7 feet, with holes 1.5 millimeters in diameter. Only two used. Other details like (8). From (9); deliver oversize to (12) and undersize to (18).

12. Trommel, 3 × 5 feet, with punched-plate screens having holes 0.75 inch in diameter, a slope of 0.625 inch to the foot, and making 20 revolutions per minute. Used only to remove chips. From (11); delivers oversize to waste and undersize to (13).

13. One set of Anaconda-type rolls, 15 × 40 inches, having a speed of 75 revolutions per minute and a capacity of 100 tons per 24 hours. Set close. Shells last 18 months. From (12); deliver crushed ore to (14).

14. Fourteen-inch elevator with an 8-ply rubber belt having a life of from 8 to 12 months, a speed of 200 feet per minute, capacity of 150 tons per 24 hours, and 12-inch malleable-iron buckets, set 12 inches apart, elevating the ore 40 feet. From (13); delivers to (15).

15. Four trommels, 3 × 7 feet, with holes 1.5 millimeters in diameter. Only two used. Other details like (8). From (14); deliver oversize to (16) and undersize to (18).

16. One double Gröndal coarse magnetic separator. For details see (7). From (10) and (15); delivers magnetic or iron product to (17) and non-magnetic product to (21).

17. Wet ball mill crushing to 1.5 millimeters. From (16); delivers crushed ore to (18).

18. Fourteen-inch elevator with details like (14). From (11), (15), and (17); delivers to (19).

19. Six double and one single Gröndal magnetic separators. (Six working.) For details see (7). From (10) and (18); deliver magnetic product to (20) and non-magnetic product to (21).

20. Settling tank for iron concentrates, 45 × 34 × 12 feet deep, divided into 4 compartments and coupled with a draining pit. From (7) and (19); delivers settlings, via electric grab bucket, to nodulizing plant and overflow to waste.

21. Frayer 6-inch centrifugal water-lined pump having a speed of 650 revolutions per minute and a capacity of 250 tons per 24 hours against a lift of 40 feet. Runners last from 2 to 3 months and linings 6 to 10 months. From (7), (16), and (19); delivers to (22).

Copper Department.

22. Dewatering box, 8 × 9 × 10 feet. From (21); delivers spigot to (23) and overflow to waste.

23. One Richards' hydraulic classifier, with 4 spigots, having a capacity of 250 tons per 24 hours. From (22); delivers first spigot to (24), second spigot to (25), third spigot to (26), fourth spigot to (27), and overflow to (28).

24. One 3-compartment Harz jig with sieves, 2 × 3 feet, of 8-mesh, 18-wire cloth. The plungers make 70 2-inch strokes per minute. From (23); delivers discharges and hutches to (32) and tailings to (29).

25. Two Wilfley tables making 240 0.5-inch throws per minute. Capacity from 25 to 30 tons per 24 hours. Only one run, one held as a spare. From (23); deliver concentrates to (32) and tailings to (29).

26. One Wilfley table with details as in (25). From (23); delivers concentrates to (32) and tailings to (33).

27. One Wilfley table with details as in (25). From (23); delivers concentrates to (32) and tailings to (33).

28. Spitzkasten, 6 feet square. From (23); delivers spigot to (31) and overflow to waste.

29. Wet ball mill, 4 × 4 feet, crushing to 1.5 millimeters. From (24) and (25); delivers, via steam jet elevator, to (30).

30. One Wilfley table making 240 0.75-inch throws per minute. Capacity from 15 to 20 tons per 24 hours. From (29); delivers concentrates to (32) and tailings to (33).

31. One Card table making 240 0.75-inch throws per minute. From (28); delivers concentrates to (32) and tailings to (33).

32. Separate V-shaped copper-concentrates bins, with 60° slopes to the sides, for each machine. From (24), (25), (26), (27), (30), and (31); deliver copper concentrates, via wheelbarrow, to market or storage and overflow to waste.

33. Frenier sand pump. From (26), (27), (30), and (31); delivers to waste.

The following gives an idea of the results obtained:

	Tons.	Percent Iron.	Percent Sulphur.	Percent Copper.
Crude ore	100	45.00	2.00	0.45
Magnetic concentrates	70	60.64	1.00	0.20
Copper "	3	39.00	28.00	5.00
Tailings	27	12.00	1.00	0.20

At this plant the Wilfley and Card tables do equally good work on fine material and the construction of both is very good. In this district where iron is cheap the cost of crushing by Ball mills and by rolls and screens is about equal. Ball mills require less attention to operate and keep in repair than rolls. The size of the product is kept constant at 1.5 millimeters by regulating the quantity of water and feed to suit the hardness of the ore.

All slime water and tailings are collected and settled, the clear water being re-pumped to the mill system again.

The mill operates on two 12-hour shifts per day, 7 days per week. There are employed 14 men per shift in the mill, 2 men in the engine room, and 2 men in the boiler room. Common labor receives 12 cents per hour and foremen 22 cents per hour.

Power and Water.

Babcock and Wilcox boilers with a total capacity of 1,000 horse-power, using blast furnace gas for fuel, furnish steam at 110 pounds pressure to the following engines: One simple non-condensing Corliss engine, 22 × 48 inches, furnishes 375 horse-power for the mill; one engine of the same style, 16 × 36 inches, furnishes 175 horse-power for the Gates breaker and the first set of rolls; two Buckeye engines, 16.5 × 18 inches, are direct connected to two Westinghouse direct-current generators and also furnish power for the nodulizing department. The generators each deliver 180 kilowatts at 250 volts.

The distribution of power is about as follows:

Gates breaker (1)	50	horse-power
Rolls (3)	10	" "
Belt conveyor (4)	15	" "
Two rolls (9) and (13)	25	" "
Fine ball mills (6) and (17)	125	" "
Two elevators (14) and (18)	5	" "
Twelve screens (8), (10), (11), (12), and (15)	10	" "
Frayer 6-inch pump (21)	25	" "
Twelve separators (7), (16), and (19)	50	" "
Water pumps	100	" "
Lights	10	" "
Total	425	" "

From 750,000 to 1,000,000 gallons of water are required per 24 hours. This is pumped by one 10-inch centrifugal pump 15 feet, and by two 10-inch, 2-stage Morris centrifugal pumps (one spare) 50 feet, to a 61,000-gallon supply tank.

R. MILLS SAVING GOLD AND COPPER VALUES.

Mill 160 is thoroughly new, modern, and well designed and ably exemplifies this class.

§ 1492. MILL NO. 160. MOCTEZUMA COPPER COMPANY, NACOZARI, SONORA, MEXICO. CONCENTRATOR NO. 2. — This mill has a capacity of 2,000 tons per 24 hours which may be increased to 3,000 tons if it is, later on, found practical to throw away the jig tailings.[25] The buildings have steel frame-works, concrete foundations, iron sides and roofs, and concrete floors which slope 1.25 inches to the foot. The mill is divided into two 1,000-ton sections, only one of which is running at present. The ore handled contains auriferous chalcopyrite, pyrite, bornite, and quartz, with chalcopyrite as the economic mineral, and it will average about 3.5% in copper before concentration. The matrix is a fine-grained siliceous rhyolite. About 5 tons of crude ore are concentrated into one. Ore is hauled 5.5 miles by a steam railroad and delivered to (1).

Crushing Plant for Both Sections.

This department is run only during the daytime so as to release the power necessary for lighting the plant at night, the two about offsetting one another.

1. Ore bins of 800 tons capacity with bottoms sloping at about 26.5°. From the mines; deliver, via 2 gates and chutes, to (2).

2. Two ore feeders. From (1); deliver to (3).

3. Two grizzlies, 8 feet long by 4 feet wide on top and 5 feet wide on the bottom, with 2.5-inch spaces between the bars which slope at about 26.5°. From (2); deliver oversize to (4) and undersize to (5).

4. One No. 8 McCully gyratory breaker. From (3); delivers ore, crushed to 2.5 inches, to (5).

5. One 36-inch belt conveyor with a conveying length of 46 feet, a speed of 250 feet per minute, and elevating the ore 15.75 feet. Tail driven. From (3) and (4); delivers to (6).

6. Two trommels, 4 × 10 feet, having 1.75-inch round holes punched in manganese steel. From (5); deliver oversize to (7) and undersize to (8).

7. Four No. 5 McCully gyratory breakers. From (6); deliver ore, crushed to 1 inch, to (8).

8. One 24-inch belt conveyor with a conveying length of 332 feet, a speed of 300 feet per minute, and elevating the ore 76 feet at an angle of nearly 16°. Head driven by gear and pinion. From (6) and (7); delivers and distributes to (9).

Sampling Plant in Two Sections.

Only One Section will be Described.

9. Crushed-ore bins of 2,000 tons capacity. From (8); deliver, via chute, to (10).

10. Portable ore-feeding cylinder with knives. Can be run in front of the chute of any bin in (9). From (9); delivers to (11).

11. One 18-inch belt conveyor with a conveying length of 152 feet, a speed of 250 feet per minute, and elevating the ore 14.5 feet. Head driven by gear and pinion. The corresponding conveyor for the other section is similar to this except that it has a conveying length of 205 feet. From (10); delivers to (12).

12. One 18-inch belt conveyor with a conveying length of 89 feet, a speed

of 250 feet per minute, and elevating the ore 13.5 feet. Head driven by gear and pinion. From (11); delivers, via Blake Denison weighing machine, to (13).

13. Sampler. From (12); delivers sample to (14) and reject to (21).

14. Sample hopper. From (13); delivers to (15).

15. Plunger feeder, 4 × 6 inches. From (14); delivers to (16).

16. Mixing drum, 2.5 × 3.0 feet. From (15); delivers to (17).

17. Snyder sampler, 3.5 feet in diameter. From (16); delivers sample to (18) and reject to (21).

18. Dodge breaker with a 7 × 9-inch jaw opening. From (17); delivers crushed sample, via hopper, to (19).

19. Snyder sampler, 2.25 feet in diameter. From (18); delivers sample to (20) and reject to (21).

20. Sample grinder. From (19); delivers sample to assayer and all rejects to (21).

Concentrator in Two Sections.

Only One Section will be Described.

21. Two 22-inch elevators with malleable-iron buckets, 9 × 10 × 20 inches, which elevate the ore 57.5 feet. From (13), (17), (19), (20), (29), (31), (33), (35), (37), and (39); deliver to (22).

22. Mixing box. From (21); delivers to (23).

23. Two trommels, 3.5 × 6 feet, making 20 revolutions per minute and having 18-millimeter round punched holes and slopes of 1.5 inches to the foot. From (22); deliver oversize to (28) and undersize to (24).

24. Two trommels with details as in (23) except that they have 12-millimeter round punched holes. From (23); deliver oversize to (32) and undersize to (25).

25. Two trommels, 3.5 × 7 feet, making 20 revolutions per minute and having 7-millimeter round punched holes. From (24); deliver oversize to (36) and undersize to (26).

26. Three trommels, 3.5 × 8 feet, making 20 revolutions per minute and having 4-millimeter round punched holes. From (25); deliver oversize to (40) and undersize to (27).

27. Three trommels with details as in (26) except that they have 2-millimeter round punched holes. From (26); deliver oversize to (41) and undersize to (44).

28. Two double 1-compartment bull jigs with sieves, 24 × 42 inches, and plungers making 80 throws per minute. The length of the throw can be varied from 0 to 6 inches. From (23), fed with 25.4 to 18-millimeter stuff; deliver all side cup discharges, via side gates and (63), to (64); all hutch products to (29); and tailings to (30).

29. Settling tank. From (28) and (30); delivers settlings to (21) and overflow to (55).

30. Dewatering feeder, 9 feet long by 4.5 feet wide. From (28); delivers ore to (31) and water to (29).

31. Coarse rolls, 16 × 42 inches, making 80 revolutions per minute and crushing to 0.1875 inch. Thrown in and out of action by friction clutch. From (30); deliver crushed ore to (21).

32. Two double 2-compartment jigs with sieves, 24 × 34 inches, and plungers making from 110 to 125 throws per minute. The length of throw can be varied from 0 to 6 inches. From (24), fed with 18 to 12-millimeter stuff; deliver all side cup discharges, via side gates and (63), to (64); all hutch products to (33); and tailings to (34).

33. Settling tank. From (32) and (34); delivers settlings to (21) and overflow to (55).

34. Dewatering feeder with details as in (30). From (32); delivers ore to (35) and water to (33).

35. Medium rolls with details as in (31) except that they crush to 0.062 inch. From (34); deliver crushed ore to (21).

36. Two double 2-compartment jigs with details as in (32). From (25), fed with 12 to 7-millimeter stuff; deliver all side cup discharges, via side gates and (63), to (64); all hutch products to (37); and tailings to (38).

37. Settling tank. From (36) and (38); delivers settlings to (21) and overflow to (55).

38. Dewatering feeder with details as in (30). From (36); delivers ore to (39) and water to (37).

39. Fine rolls with details as in (31) except that they are set close. From (38); deliver crushed ore to (21).

40. Six 3-compartment jigs with sieves, 24 × 34 inches, and plungers making from 150 to 175 throws per minute. The length of throw can be varied from 0 to 3 inches. From (26), fed with 7 to 4-millimeter stuff; deliver all side cup discharges, via side gates and (63), and all hutch products, via (63), to (64); and tailings to (42).

41. Six 3-compartment jigs with details as in (40). From (27), fed with 4 to 2-millimeter stuff; deliver all side cup discharges, via side gates and (63), and all hutch products, via (63), to (64); and tailings to (42).

42. Five dewatering tables with details as in (30). From (40) and (41); deliver tailings to (43) and water to (55).

43. Jig-tailings bin of structural steel and concrete, 66 feet long by 13 feet high by 11.5 feet wide on top and sloping at 45° to the bottom. From (42); delivers, via four gates, to (48).

44. One V-shaped settling tank. From (27); delivers settlings to (45) and overflow to (55).

45. Two duplex Callow 30-mesh screens. From (44); deliver oversize to (46) and undersize to (47).

46. Eight Wilfley tables. From (45); deliver concentrates, via (63), to (65); middlings to (50); and tailings to (60).

47. Two Wilfley tables. From (45); deliver concentrates, via (63), to (65); middlings to (50); tailings to (60); and slimes to (55).

48. Four ore feeders. From (43); deliver to (49).

49. Four Evans Waddell 6-foot Chili mills with 2-millimeter, standard-slot discharge screens. Thrown in and out of action by friction clutches. Two used and two held as spares. From (48); deliver pulp to (52).

50. Two 22-inch elevators with malleable-iron buckets, 9 × 10 × 20 inches, which elevate the ore 56 feet. From (46), (47), and (54); deliver ore to (51) and water to (58).

51. One Evans Waddell 6-foot Chili mill with 1.5-millimeter round holes in the discharge screens and other details as in (49). From (50); delivers pulp to (52).

52. Two settling tanks. From (49) and (51); deliver settlings to (53) and overflows to (58).

53. Six duplex Callow 30-mesh screens. From (52); deliver oversize to (54) and undersize to (58).

54. Eighteen Wilfley tables. From (53); deliver concentrates, via (63), to (65), middlings to (50), and tailings to (60).

55. Eight slimes-settling tanks. From (29), (33), (37), (42), (44), and (47); deliver settlings to (56) and clear water overflows to (72).

56. Two slimes-settling tanks. From (55); deliver settlings to (57) and overflows to (58).

57. Sixteen Johnston 6-foot smooth-belt vanners. From (56); deliver concentrates, via (63), to (65), and tailings to (60).

58. Six slimes-settling tanks. From (50), (52), (53), and (56); deliver settlings to (59) and clear water overflows to (69).

59. Twenty Johnston 6-foot smooth-belt vanners. From (58); deliver concentrates, via (63), to (65) and tailings to (60).

60. Tailings sampler which is a cutter with water tanks for shifting it. From (46), (47), (54), (57), and (59); delivers sample to assayer and reject to (61).

61. Three sand tanks arranged in series. The first overflows to the second and the second to the third, each being larger than the preceding. From (60); deliver spigots to waste in the river and the last overflow to (62).

62. Twenty-four reinforced-concrete settling tanks. From (61); deliver spigots to waste in the river and clear water overflows to (69).

63. Concentrates sampler like (60) and run by the same power. From (28), (32), (36), (40), (41), (46), (47), (54), (57), and (59); delivers sample to assayer and rejects to (64) and (65).

64. Seven reinforced-concrete coarse-concentrates bins. From (28), (32), (36), (40), and (41), via (63), also from (67); deliver nearly dry concentrates, via water-tight gates and cars, to smelter and overflows and drainings to (66).

65. Three reinforced-concrete fine-concentrates bins. From (46), (47), (54), (57), and (59), via (63); deliver nearly dry concentrates, via water-tight gates and cars, to smelter; and overflows and drainings to (66).

66. Six concentrates overflow tanks. Serve both sections. From (64) and (65); deliver settled concentrates to (67) and clear water overflows to (68).

67. One centrifugal concentrates pump for both sections. From (66); delivers concentrates to one tank in (64).

Water System for Both Sections.

68. One centrifugal pump. From (66); delivers to (69).

69. Six reservoirs. From (58), (62), and (68); deliver to (70).

70. Three Triplex pumps. From (69); deliver to (71).

71. Four reservoirs. From (70) and (77); deliver to mill system.

72. Two reservoirs. From (55); deliver to (73).

73. Two Triplex pumps. From (72); deliver to (74).

74. Four reservoirs. From (73) and (77); deliver to mill system.

75. Well. Delivers to (76).

76. Two Triplex pumps. From (75); deliver to (77).

77. Water-storage tank of 500,000 gallons capacity. From (76); delivers make-up water, amounting to 200 gallons per minute when but one section is operating, to (71) and (74).

The standard settling tanks, 12 feet in diameter by 12 feet deep, have reinforced-concrete walls, 5 inches thick, with overflow and rim launders all in one monolith. A "goose neck" discharge made of 2.5-inch pipe with gentle bends has its vent four feet below the top of the level of the tank and a lever at the top operates a plug in the bottom in three phases, as follows:

1. To discharge through the "goose neck."
2. To stop all discharge.
3. To flush out the tank into the drainage canal beneath.

An efficiency of 81 to 82% is obtained, and 85% is expected a little later on when the new help understands the mill better. The tailings run from 0.4 to 1.8% in copper with perhaps 0.6 as the average.

Labor.

The following help is employed per 24 hours when only one section of the mill is in operation. When the other section is running only 50% additional help will be required.

One	man	at the	power plant	two shifts
"	"	"	distributing conveyor (8)	three "
"	"	on	feeder (10), weighing machine, and trommels (23), (24), (25), (26), and (27)	" "
"	"	"	coarse-jigs (28), (32), and (36)	" "
"	helper	"	" " " "	" "
"	man	"	Callow screens (45) and Wilfleys (46) and (47)	" "
"	helper	"	Callow screens (45) and Wilfleys (46) and (47)	" "
"	man	"	fine jigs (40) and (41)	" "
"	helper	"	" " "	" "
"	man	"	rolls (31), (35), and (39)	" "
"	"	"	Chili mills (49) and (51)	" "
"	helper	"	" " "	" "
"	man	"	Callow screens (53)	" "
"	"	"	Wilfleys (54)	" "
"	helper	"	" "	" "
"	man	"	Vanners (57)	" "
"	"	"	" (59)	" "
"	helper	"	" "	" "
"	man	"	settling tanks, concentrates bins, etc.	" "
"	"	"	pumps	" "

Besides the above list of 59 men per 24 hours there is a "clean-up gang" and a "concentrates gang" each working three shifts.

Power and Water.

Four banks of Sterling boilers generate steam at 160 pounds pressure and deliver it to the Curtis turbines at 155 pounds pressure. Two boilers furnish power enough for one section. They burn Dawson coal with 10 percent of ash and use a Green fuel-economizer which delivers feed water to the boilers at from 200 to 250°. They deliver steam to the power plant which contains three 1000-kilowatt units, only one of which is run at a time when but one section of the mill is operating. Each unit is composed of a Curtis upright 4-stage steam turbine manufactured by the General Electric Company. The turbine makes 1,800 revolutions per minute and develops a 60-cycle 6,600-volt alternating current which is stepped down to 230 volts for use at the motors. The General Electric Company guarantees that the turbines will not consume over 22 pounds of steam when on half load and 21 pounds of steam when on full load per indicated horse-power. The exhaust steam has 75° of superheat and the condenser gives 24 inches of vacuum. An oil slip bearing is used. This plant runs the mill, mines, ice plant, shop, pumps, and power station.

The following motor list applies to one section of the mill:

One	75	horse-power motor runs	(2), (4), and (5)
Two	50	" motors run	(6) and (7)
One	30	" motor runs	(8)
One	20	" " "	(21)
"	150	" " "	(15), (16), (17), (18), (19), (20), (30), (31), (34), (35), (38), and (39). (31), (35), and (39) actually use 88 horse-power.

One	5	horse-power	motor	runs	(11)
"	5	"	"	"	(12)
"	150	"	"	"	(48), (49), (50), (51), and (53)
"	20	"	"	"	(54), and (57), (54) and (57) actually use 12 horse-power
"	10	"	"	"	(59). (59) actually uses 7 horse-power.
"	20	"	"	"	one half of (23), (24), and (25); one-third of (26) and (27); one-half of (28), (32), and (36); and all of (45), (46), and (47).
"	40	"	"	"	one-half of (23), (24), and (25); two-thirds of (26) and (27); one-half of (28), (32), and (36); and all of (40), (41), and (42).
"	20	"	"	"	(67). (67) actually uses 12 horse-power. To be duplicated when second section is thrown in.
"	10	"	"	"	(68). (68) actually uses 7 horse-power.
Three	50	"	motors	run	(70). Serve both sections.
Two	30	"	"	"	(73). Serve both sections.

Fifteen hundred gallons of water per minute are recovered from the overflow of 24 tanks settling tailings and 1,000 gallons of water per minute are recovered from dewatering the jig tailings. There is required for one section of the mill, in addition to the above, 200 gallons of make-up water per minute which is supplied from a well by means of a pump.

S. MILLS SAVING GOLD, SILVER, AND COPPER VALUES.

This important group is well covered by Mills 161, 162, 163, 164, 165, 166, 167, 168, 169, 170, 171, 172, 173, and 174, which are scattered over six of the more important districts.

§ 1493. MILL NO. 161. WASHOE CONCENTRATOR. ANACONDA COPPER MINING COMPANY, ANACONDA, MONTANA.[46] — This mill has a capacity of 8,800 tons per 24 hours and is divided into eight similar sections.[121]

The ore consists of the economic minerals chalcocite, bornite, enargite, cupriferous pyrite, with small quantities of the minerals covellite, sphalerite, galena, and a very little chalcopyrite in a gangue of quartz and altered granite. The ore is hand-picked in the mine into rich ore which goes to the smelter, and concentrating ore, which goes to the mill. The division, formerly made, into hard and soft concentrating ores, with a special treatment for each, has been given up. The problem is to save the silver and copper. While no attention is paid to the lead and zinc, considerable goes into the concentrates.[46]

The ores, coming from the following properties, are delivered to (1):

A. Anaconda Copper Mining Company.
B. Washoe Copper Company, including the Washoe Copper Company's sampler in Butte which furnishes various custom ores.
North Butte Mining Company and Red Metal Mining Company.
C. Butte and Boston Consolidated Mining Companies.
D. Parrot Silver and Copper Company.
E. Trenton Mining and Development Company. Formerly Colorado Smelting and Mining Company.
F Pittsburg and Montana Copper Company.
G. LaFrance Copper Company.

1. Bin holding 25 carloads, or 1,250 tons, of ore. From the mines; delivers, via two gates operated by compressed air, to (2).

2. Two shaking feeders which also serve as grizzlies. Have cast-iron bottoms 0.75 inch thick with holes 38.1 millimeters in diameter and slopes of 3.5 inches to the foot. From (1); deliver oversize to (3) and undersize to (6).

3. Blake breaker with a jaw opening 12 × 24 inches, having chilled-iron jaw plates which last about 10 days and making 200 thrusts per minute. From (2); delivers crushed ore to (4).

4. Two trommels, 3 × 5.67 feet, with holes 38.1 millimeters in diameter in cast-iron plates 0.75 inch thick, six plates to the circumference. Have speeds of 18 revolutions per minute and slopes of 0.88 inch to the foot. From (3); deliver oversize to (5) and undersize to (6).

5. Two Blake breakers with jaw openings 5 × 15 inches, having chilled-iron jaw plates which last about 14 days, making 250 thrusts per minute and breaking to 31.75 millimeters. From (4); deliver crushed ore to (6).

6. Mixing box, 3 × 3 × 4 feet, with two discharges 6 inches above the bottom to prevent wear. From (2), (4), (5), (10), and (14); delivers ore to (7).

7. Two main elevators having 10-ply rubber belts, speeds of 440 feet per minute, inclinations of 1.25 inches to the foot, and malleable cast-iron buckets, 7 × 14 inches. Diameters of top pulleys 42 and of bottom pulleys 30 inches. From (6); deliver to (8).

8. Two trommels, 3 × 6 feet, with holes 22.35 millimeters in diameter, speeds of 20 revolutions per minute, slopes of 0.88 inch to the foot, and areas of 57 square feet each. From (7); deliver oversize to (9) and undersize to (11).

9. Two 2-compartment Harz jigs with sieves having 9-millimeter square punched holes to prevent excessive blinding. Plungers make 175 2.75-inch strokes per minute. From (8), fed with 38.1 to 22.35-millimeter stuff; deliver first and second discharges, as coarse concentrates, over shaking dewatering screens having 7-millimeter round holes and, via belt conveyor, to two 450-ton bins, 14 × 20 × 22 feet, having flat bottoms, and four shallow hoppers in the bottom of each bin; each hopper delivers, via special swinging gate, to cars and thence to smelter. Also deliver first and second hutches and water to (16) and tailings to (10).

10. Coarse rolls, 15 × 42 inches, making 100 revolutions per minute and having Midvale steel shells, 4 inches thick, weighing 2,480 pounds when new. From (9); deliver crushed ore to (6).

11. Two trommels, 3 × 8 feet, with holes 7 millimeters in diameter, speeds of 20 revolutions per minute, slopes of 0.88 inch to the foot, and areas of 75 square feet each. From (8); deliver oversize to (12) and undersize to (15).

12. Four 2-compartment Harz fine jigs with sieves having 7-millimeter square punched holes to prevent excessive blinding. Plungers make 175 2.25-inch strokes per minute. From (11), fed with 22.35 to 7-millimeter stuff; deliver first and second discharges, as coarse concentrates, to same bins and, via similar route, as in (9); first and second hutches to (16); and tailings to (13).

13. Four dewatering screens with holes 8 millimeters in diameter. From (12); deliver oversize to (14) and undersize to (16).

14. Fine rolls, 15 × 42 inches, making 100 revolutions per minute and having Midvale steel shells, 4 inches thick, weighing 2,480 pounds when new. From (13); deliver crushed ore to (6).

15. Four trommels, 3 × 6 feet, having holes 5 millimeters in diameter, speeds of 18 revolutions per minute, slopes of 1 inch to the foot and areas of 57 square feet each. From (11); deliver oversize to (16) and undersize to (17).

16. Twelve 2-compartment Evans jigs with brass 6-mesh, 14-wire sieves in all compartments. Plungers make 195 1.25-inch strokes per minute. From (9), (12), (13), and (15), fed with 7 to 5-millimeter stuff; deliver concentrates and hutch products to tank house and tailings to (22).

17. Four trommels, 3 × 7.5 feet, with holes 2.5 millimeters in diameter, speeds of 18 revolutions per minute, slopes of 1 inch to the foot, and areas of 71 square feet each. From (15); deliver oversize to (18) and undersize to (19).

18. Twelve 2-compartment Evans jigs with brass 6-mesh, 14-wire sieves in all compartments. Plungers make 200 1-inch strokes per minute. From (17), fed with 5 to 2.5-millimeter stuff; deliver concentrates and hutch products to tank house and tailings to (22).

19. Two dewatering V tanks. From (17); deliver spigots to (20) and overflows to (37).

20. Four Evans classifiers with 3 spigots each. Inclinations of 0.75 inch to the foot. From (19), fed with 2.5 to 0-millimeter stuff; deliver spigots to (21) and overflows to (37).

21. Twelve 2-compartment Evans jigs with plungers and sieves as follows. All plungers make 205 strokes per minute:

Compartments.	Jigs on First Spigots.		Jigs on Second Spigots.		Jigs on Third Spigots.	
	Sieve.	Length of Stroke.	Sieve.	Length of Stroke.	Sieve.	Length of Stroke.
First	4 mesh, 14 wire	1 inch	6 mesh, 14 wire	0.88 inch	10 mesh, 18 wire	0.88 inch
Second	8 " 16 "	0.75 inch	10 " 18 "	0.50 "	14 " 20 "	0.50 "

From (20); deliver concentrates and hutch products to tank house, tailings to (22), and clean overflow water to (25) and (27).

22. Two tailings dewatering V tanks. From (16), (18), and (21); deliver spigots to (24) and overflows to (23).

23. Two square dewatering tanks. From (22); deliver spigots to (38) and overflow water to smelter launder and, as hydraulic water, for the finishing jigs.

24. One coarse-middlings elevator having a 10-ply rubber belt, a speed of 462 feet per minute, an inclination of 1 inch to the foot, and malleable cast-iron buckets, 8 × 16 inches. Diameter of top pulley 42 and of bottom pulley 30 inches. From (22) and (26); delivers to (25).

25. Four trommels, 3 × 6 feet, with 1.5-millimeter slotted holes, speeds of 12.5 revolutions per minute, slopes of 1 inch to the foot, and areas of 57 square feet each. From (24) with wash water from (21); deliver oversize to (26) and undersize to (27).

26. Two middlings rolls, 15 × 42 inches, making 125 revolutions per minute, crushing to 1.5 millimeters and having Midvale steel shells, 4 inches thick, weighing 2,480 pounds when new. From (25); deliver crushed ore to (24).

27. Four Evans classifiers with 3 spigots each. Inclinations of 0.75 inch to the foot. From (25) with hydraulic water from (21), fed with 1.5 to 0-millimeter stuff; deliver spigots to (28) and overflows to (38).

28. Twelve 3-compartment Evans jigs with plungers and sieves as follows. All plungers make 210 strokes per minute.

Compartment.	Jigs on First Spigots.		Jigs on Second Spigots.		Jigs on Third Spigots.	
	Sieve.	Length of Stroke.	Sieve.	Length of Stroke.	Sieve.	Length of Stroke.
First	4 mesh, 14 wire	0.75 inch	6 mesh, 14 wire	0.63 inch	10 mesh, 18 wire	0.63 inch
Second	6 " 14 "	0.75 "	8 " 16 "	0.63 "	12 " 19 "	0.63 "
Third	8 " 16 "	0.50 "	8 " 16 "	0.38 "	12 " 19 "	0.38 "

From (27); deliver concentrates to (29), hutches and middlings from side cup discharges of tail sieves to (30), and tailings to (33).

29. One vertical concentrates elevator having a 10-ply rubber belt, a speed of 395 feet per minute, and malleable cast-iron buckets, 7 × 14 inches. Diameter of top pulley 36 and of bottom pulley 30 inches. From (28) and (36); delivers to tank house.

30. One vertical fine-middlings elevator having a 10-ply rubber belt, a speed of 461 feet per minute, and malleable cast-iron buckets, 8 × 16 inches. Diameter of top pulley 42 and of bottom pulley 30 inches. From (28) and (36); delivers to (31).

31. Three 6-foot Huntington mills having speeds of 52 revolutions per minute, steel die and roller rings, and crushing through slotted screens with 1 × 13-millimeter holes. From (30); deliver pulp to (32).

32. Two dewatering V tanks. From (31); deliver spigots to (35) and overflows to (41).

33. Two dewatering tanks. From (28); deliver overflows to a tank on the table floor for wash water and smelter launder; and settlings, via launder, to waste dump.

34. Two dewatering tanks. From (36); deliver overflows to smelter launder and settlings, via launder, to waste dump.

35. Four Evans classifiers with 3 spigots each. Inclinations of 0.75 inch to the foot. From (32), fed with 1 to 0-millimeter stuff; delivers spigots to (36) and overflows to (41).

36. Twelve 3-compartment Evans jigs with plungers and sieves as follows. All plungers make 215 strokes per minute.

Compartment.	Jigs on First Spigots.		Jigs on Second Spigots.		Jigs on Third Spigots.	
	Sieve.	Length of Stroke.	Sieve.	Length of Stroke.	Sieve.	Length of Stroke.
First	6 mesh, 14 wire	0.69 inch	8 mesh, 16 wire	0.69 inch	12 mesh, 19 wire	0.69 inch
Second	8 " 16 "	0.69 "	10 " 18 "	0.69 "	12 " 19 "	0.69 "
Third	8 " 16 "	0.56 "	10 " 18 "	0.56 "	12 " 19 "	0.56 "

From (35); deliver concentrates to (29); hutches and middlings from side cup discharges of tail sieves to (30), and tailings to (34).

37. Seven dewatering V tanks. Each tank has a capacity of 176 cubic feet and a settling area of 75 square feet. From (19) and (20); deliver spigots to (39) and overflows to (48).

38. Seven dewatering V tanks. Each tank like those in (37). From (23) and (27); deliver spigots to (40) and (43), and overflows to (48).

39. Eleven Wilfley tables making 240 strokes per minute. From (37); deliver concentrates, via launder, to (47); middlings to (41); slimes to (42); and tailings, via launder, to waste dump.

40. Six Wilfley tables making 240 strokes per minute. From (38); deliver concentrates, via launder, to (47); middlings to (41); slimes to (42); and tailings, via launder, to waste dump.

41. Seven dewatering V tanks. Each tank is like those in (37). From (32), (35), (39), (40), and (45); deliver spigots to (43) and overflows to (48).

42. One square, center-feed, peripheral-overflow tank, 10 × 10 × 10 feet. This serves to keep the finer portion of the middlings from going to the slimes ponds, and catches these finer middlings for concentration. From (39), (40), and (46); delivers spigot to (44) and overflow to (48).

43. Fifteen Wilfley tables making 240 strokes per minute. From (38) and (41); deliver concentrates, via launder, to (47); middlings to (45); slimes to (46); and tailings, via launder, to waste dump.

44. One Wilfley table making 240 strokes per minute. From (42); delivers concentrates, via launder, to (47); middlings to (45); slimes to (46); and tailings, via launder, to waste dump.

45. One fine-middlings elevator having a 7-ply rubber belt, a speed of 293 feet per minute, an inclination of 1.25 inches to the foot, and malleable cast-iron buckets, 6 × 8 inches. Diameters of top and bottom pulleys 24 inches. From (43) and (44); delivers to (41).

46. One Pohle air-lift pump which serves two sections. From (43) and (44); delivers to (42).

47. One fine-concentrates elevator having a 10-ply rubber belt, a speed of 461 feet per minute, an inclination of 1.25 inches to the foot, and malleable cast-iron buckets, 7 × 14 inches. Diameter of top pulley 36 and of bottom pulley 24 inches. From (39), (40), (43), and (44); delivers to tank house.

48. Slimes flume which serves eight sections. From (37), (38), (41), and (42); delivers to slimes ponds.

NOTE. — The Old English gauge is used for the size of all wires in this mill.

Slimes Ponds for Eight Sections.

The slimes from (48) pass into six ponds, through each pond lengthwise and to waste. Each pond is approximately 300 feet wide, 600 feet long, and 14 feet deep. After a pond is filled with slimes, it is allowed to dry for about 3 months, and is then excavated by means of cable dredges. The slimes are formed into briquettes with a certain amount of flue concentrates and smelted in the blast furnaces.

Tank House.

In the tank house, for each section there are 6 bins, each 19 × 19 and 12 feet deep, charged at one time, and overflowing into 3 other bins, in parallel, each 19 × 19 and 11 feet deep. Each of the above bins has a flat bottom and has four shallow hoppers and gates which discharge them, via cars, to the smelter. The overflows of the last three bins, for four sections combined, flow into three bins, each 19 × 56 and 10 feet deep, either two or three of these operating in parallel, depending on the necessities of emptying, and each is fitted with 12 shallow hoppers and gates which discharge the bins, via cars, to the smelter. The discharge of the bins is assisted by pushing 0.5-inch pipes into the material, the pipes being connected by hose to 17 pounds of air pressure. This saves a great deal of hard shoveling. All these bins are well tied, horizontally, by 1.25-inch rods.

Water.

Fresh water comes to the mill from the main flume and amounts to about 21 tons per ton of ore milled. The fresh water is forced to the top floor of the mill by a rotary pump and supplies, in each section, six Harz jigs, eight trommels, and the crushers. Fresh water is also supplied for hydraulic water on Evans jigs (16), Evans jigs (28), and classifiers (35).

Power.

Three hundred and forty horse-power delivered to the main shaft is required to drive one section.

Capacity.

The average ore treated per 24 hours is about 1,100 tons per section. During the 24 hours there are stops of short duration to examine the crushers and rolls; these stops are not considered in estimating the 24-hour tonnage. One section is idle on the morning shift, 8 hours, for repairs to crushers, elevators,

etc. This time is also omitted in estimating the daily tonnage; as is any period when there is a shortage of ore or water.

Shifts, Labor, and Wages.

The mill runs 3 shifts a day, 7 days a week. Fourteen men are required per section, per shift, and the wages range between $3 and $3.50 per 8-hour shift.

Table Department.

There are 14 settling tanks on the upper floor arranged in two tiers, and 7 on the lower floor in one tier; except sections 3 and 6 which have 16 and 8 on the respective floors.

There are 17 Wilfley tables on the upper and 16 on the lower floors per section; except sections 3 and 6, which have 18 and 17 on the respective floors.

The slope of all floors is 1.75 inches to the foot. Square feet of table surface per section, 2,904.

Jig Department.

The following is the square feet of jig and screen surface of each department. (By jig surface is meant the sieve area and by screen surface the area of trommels.)

Department.	Crusher.	Jigs.	Middlings.	Re-grinding.	Total.
Jig surface in square feet	66.75	421.65	210.65	210.65	909.60
Screen surface in square feet	374.00	512.00	228.00	.....	1,114.00

§ 1494. MILL NO. 162. BOSTON AND MONTANA CONSOLIDATED COPPER AND SILVER MINING COMPANY, GREAT FALLS, MONTANA.[89] — The mill has 6 sections, and 2 middlings departments, each to handle the middlings from 3 sections of the main mill.[185] The total capacity of the mill is 3,000 tons per 24 hours, 500 tons per section. The mill runs 24 hours a day 7 days a week, on ore from the company's mines located at Butte, 171 miles distant. The ore is brought to the works by the Great Northern Railroad in bottom-dumping cars of 50 tons capacity.[97]

In mining the ore two classes are made, one for smelting, and the other for concentrating. The ore consists of the following minerals in a gangue of quartz. and partially decomposed granite: pyrite, chalcocite, enargite, bornite, covellite, chalcopyrite, tetrahedrite, tennantite, galena, sphalerite, and a telluride (in form not determined).

Variations in the grade of the ore occur from month to month, depending upon the relative quantities shipped from the several shafts, but analyses following the description of the mill will give some idea of the work done in concentrating.

The physical condition of the ore as it is received by the mill is shown in the following summary of tests on carload lots from the four most important mines of the company:[163] (See Table 547). See also Table 548 which gives analyses of ore, concentrates, and tailings.

TABLE 547. — SUMMARY OF HAND-SORTING TESTS ON SECOND-CLASS ORE AT MILL 162.

	A.			B.			C.			D.		
	Percent Original Solid.	Copper Assay.	Percent Original Copper.	Percent Original Solid.	Copper Assay.	Percent Original Copper.	Percent Original Solid.	Copper Assay.	Percent Original Copper.	Percent Original Solid.	Copper Assay.	Percent Original Copper.
Original ore	100.00	4.69	100.00	100.00	3.99	100.00	100.00	4.12	100.00	100.00	3.43	100.00
Over 1.75-inch grizzly.....	11.79	5.77	14.50	45.71	2.73	31.30	34.53	4.35	36.40	25.25	3.83	28.20
Through 1.75-inch grizzly; on 38.1-millimeter round hole ...	6.60	5.39	7.58	10.26	3.13	8.10	10.63	2.87	7.40	12.82	1.96	7.40
Through 38.1 and on 1-millimeter round hole ...	51.36	4.59	50.34	34.10	4.88	41.70	38.48	4.16	38.90	42.65	3.51	43.60
Through 1-millimeter round hole	30.24	4.28	27.58	9.93	7.61	18.90	16.36	4.35	17.30	19.28	3.70	20.80
Through 200 mesh	12.66	4.00	.....	3.94	9.40	.....	10.18	4.40	.....	10.75	2.80	.....
Over 1.75-inch Grizzley — Hand Picking — Based on Original Ore.												
First class.....	3.84	14.70	12.01	2.79	10.43	7.30	12.37	9.20	27.60	3.55	16.03	16.60
Second class	7.95	1.47	2.49	42.92	2.22	24.00	22.16	1.64	8.80	21.70	1.83	11.60

Concentrator.

1. Six storage bins with a total capacity of 14,600 tons. From railroad cars; deliver, via gates and chutes, to (2).

2. Six ore-feed bins with a total capacity of 7,600 tons. From (1); deliver, via gates and chutes, to (3).

Since all sections are nearly alike the author will describe only the sixth, noting differences in other sections as they are met.

Sixth Section.

3. Two automatic ore-feeders. From (2); deliver, via chutes, to (4).

4. Two grizzlies with 38.1-millimeter spaces between the bars. From (3); deliver oversize to (5) and undersize to (9).

5. Two 2-foot picking belts with conveying lengths of 18 feet and speeds of 50 feet per minute. From (4); deliver ore to (6) and high-grade ore to the smelter.

6. One coarse Blake breaker with a jaw opening, 10 × 20 inches, and making 270 thrusts per minute. From (5); delivers crushed ore to (7).

7. Two cast-iron trommels, 3 × 4 feet, having cored holes 38.1 millimeters in diameter, speeds of 12 revolutions per minute, and slopes of 3 inches to the foot. From (6); deliver oversize to (8) and undersize to (9).

8. Two fine Blake breakers with jaw openings 5 × 12 inches, and making 300 thrusts per minute. From (7); deliver crushed ore to (9).

9. Two 12-inch coarse-crushing elevators made of 8-ply rubber belting and having speeds of 345 feet per minute. Malleable-iron buckets, 6 × 11 inches, spaced 12 inches apart. Capacity 400 tons per 24 hours. From (4), (7), (8), (16), and (20); deliver to (10).

10. Two trommels, 3 × 6 feet, having round punched holes 22.2 millimeters in diameter, speeds of 20 revolutions per minute, and slopes of 2 inches to the foot. From (9); deliver oversize to (15) and undersize to (11).

11. Two trommels, 3 × 6 feet, having round punched holes 8 millimeters in diameter, speeds of 16 revolutions per minute, and slopes of 1.5 inches to the foot. From (10): deliver oversize to (17) and undersize to (12).

12. Mixing box, made of 2-inch plank, 5 feet long, 2.5 feet wide, and 3 feet deep, inside measurements. From (11); delivers to (13).

13. Two trommels, 3 × 6 feet, having round punched holes 5 millimeters in diameter, speeds of 18 revolutions per minute, and slopes of 1.25 inches to the foot. From (12); deliver oversize to (21) and undersize to (14).

14. Two trommels, 3 × 6 feet, having round punched holes 2.5 millimeters in diameter, speeds of 18 revolutions per minute, and slopes of 1 inch to the foot. From (13); deliver oversize to (22) and undersize to (28).

15. Two Harz bull jigs with 1 compartment each. Sieves are 24.5 × 42.25 inches with 0.31-inch square punched holes. Plungers make 180 2.5-inch strokes per minute. From (10), fed with 38.1 to 22.2-millimeter stuff; deliver cup discharges to (18), hutch products to (17), and tailings to (16).

16. One pair coarse rolls, 15 × 28 inches, having cast-iron shells 4 inches thick and a speed of 190 revolutions per minute. From (15); deliver crushed product to (9).

17. Two Harz jigs with 2 compartments each. Sieves are 26 × 36 inches with 0.25-inch square punched holes. Plungers make 180 2-inch strokes per minute. From (11) and (15), fed with 22.2 to 8-millimeter stuff; deliver first and second cup discharges to (18), first and second hutch products to (21), and tailings to (20).

18. Fifteen-inch coarse-concentrates elevator with a 10-ply rubber belt, having a speed of 345 feet per minute. Malleable-iron buckets, 6 × 11 inches, spaced 12 inches apart. Capacity 170 tons per 24 hours. From (15), (17), (21), and (22); delivers, via launder on top of building, to (19); or if (19) is full, via second launder on top of building, to (66).

19. Two coarse-concentrates bins with a total capacity of 500 tons. From (18); deliver coarse concentrates to blast-furnace charging cars, via gate and chute, and drained water to (66).

20. One pair fine rolls, 15 × 28 inches, having chilled-steel shells 4 inches thick and a speed of 180 revolutions per minute. From (17); deliver crushed product to (9).

21. Eight Evans jigs with 2 compartments each. Sieves are brass cloth, 20.25 × 40.625 inches, 8 meshes to the inch. Plungers make 195 1.25-inch strokes per minute. From (13) and (17), fed with 8 to 5-millimeter stuff through a launder; deliver first and second cup discharges to (18); first and second hutch products, via launder, to (40); and tailings, via launder, to (23).

22. Eight Evans jigs with 2 compartments each. Sieves are brass cloth, 20.25 × 40.625 inches, 8 meshes to the inch. Plungers make 195 1-inch strokes per minute. From (14), fed with 5 to 2.5-millimeter stuff through a launder; deliver first and second cup discharges to (18), first and second hutch products, via launder, to (40), and tailings, via launder, to (23).

23. Middlings-settling and dewatering tank, under the floor. From (21) and (22); delivers overflow to (24) and spigot to (25).

24. Dewatering-screen tank. From (23); delivers overflow to (44); screened water, piped out for wash water, to (36); and slimes settlings, by spigot, via launder, to (45).

25. Fifteen-inch middlings elevator with a 10-ply rubber belt having a speed of 560 feet per minute and malleable-iron buckets, 8 × 14 inches, spaced 12 inches apart. Capacity 350 tons per 24 hours. From (23) and (27); delivers to (26).

26. Two trommels, 3 × 6 feet, having round punched holes 2.5 millimeters

in diameter, speeds of 20 revolutions per minute, and slopes of 1 inch to the foot. From (25); deliver oversize to (27) and undersize to (31).

27. One pair middlings finishing-rolls, 15 × 28 inches, having chilled-steel shells 4 inches thick and a speed of 120 revolutions per minute. From (26); deliver crushed product to (25).

28. Settling and dewatering box. From (14); delivers overflow to (33) and spigot to (29).

29. Two Evans hydraulic classifiers with 4 spigots each. From (28), fed with 2.5 to 0-millimeter stuff; deliver spigots to (30) and overflows to (34).

30. Eight Evans jigs with 2 compartments each. Sieves are brass cloth, 20.25 × 40.625 inches, head sieves 8, and tail sieves 18 meshes to the inch. The plungers make 200 strokes per minute, having lengths in the first compartments of 0.75 inch and in the second compartments of 0.375 inch. From (29); deliver second cup discharges, via launder, to (45); first hutch products of 8 jigs and second hutch products of 6 middle jigs, via launder, to (40); second hutch products of last jigs, via launder, to (34); water over end of four middle jigs to (31) for hydraulic purposes; and remaining water and tailings to (44).

31. Two Evans hydraulic classifiers with 4 spigots each. From (26) and water from (30), fed with 2.5 to 0-millimeter stuff; deliver spigots to (32) and overflows to (35).

32. Eight Evans jigs with 2 compartments each. Sieves are brass cloth, 20.25 × 40.625 inches, head sieves 8 and tail sieves 20 meshes to the inch. The plungers make 225 strokes per minute, having lengths in the first compartments of 0.75 inch and in the second compartments of 0.375 inch. From (31); deliver second discharges, via launder, to (45); first and second hutch products, via launder, to (39); water from four middle jigs and tailings from last four jigs to (44).

33. Feed tank for Wilfley tables. From (28); delivers spigots to (36) and overflow to (43) or (60).

34. Four feed tanks for Wilfley tables. From (29), (30), and (59); deliver spigots to (36) and overflows to (43) or (60).

35. Three feed tanks for Wilfley tables. From (31); deliver spigots to (58) and overflows to (43) or (60).

36. Eleven Wilfley tables making 240 strokes per minute, having lengths for coarse feed of 0.75 inch and for fine feed of 0.375 inch. From (33), (34), and wash water from (24); deliver concentrates to (39), middlings and slimes to (37), and tailings to (44).

37. Two feed tanks for vanners. From (36); deliver spigots to (38) and overflows to (43) or (60).

38. Twelve 4-foot Frue vanners, 12 feet long, making 200 1-inch strokes per minute. From (37); deliver concentrates to (39) and tailings to (44).

39. Fifteen-inch fine-concentrates elevator with a 10-ply rubber belt having a speed of 470 feet per minute, and malleable-iron buckets spaced 12 inches apart. Capacity 150 tons per 24 hours. From (32), (36), and (38); delivers concentrates to (40).

40. Sixteen fine-concentrates bins, 4 series of 4 each with but 8 in use at one time. From (21), (22), (30), (39), and (65); deliver settlings, via bottom gates, to (42) and overflows to (41).

41. Sixteen side tanks, 4 series of 4 each. From (40); deliver settlings, intermittently via shovels, to (42) and overflows to (44).

42. Concentrates-storage tanks. From (40) and (41); deliver concentrates, via gates and chutes, to railroad bottom-dump cars.

43. Two slimes-settling tanks, only one used at a time. From (33), (34),

(35), and (37); deliver settlings, periodically via shovels, to railroad cars and overflows to (44).

44. Tail race. From (24), (30), (32), (36), (38), (41), (43), (48), (51), (53), (55), (57), and (67); delivers to river.

Middlings Department. Three Sections United.

45. Two 15-inch middlings elevators with 10-ply rubber belts having speeds of 518 feet per minute and malleable-iron buckets, 8 × 14 inches, spaced 12 inches apart. Capacity 270 tons each per 24 hours. From (24), (30), (32), (54), and (55); deliver to (46).

46. Feed tanks. From (45); deliver spigots to (47) and overflows to (48).

47. Eight 5-foot Huntington mills making 65 revolutions per minute and each having 5 screens, 9 × 31 inches, with punched slotted-holes 1.25 × 12 millimeters. Only 6 in use at one time and 2 spares. From (46); deliver pulp to (49).

48. Four tanks under the floor. From (46); deliver spigots to (54) and overflows to (44).

49. Four settling and dewatering boxes. From (47); deliver spigots to (50) and (52) and overflows to (57).

50. Seven Evans hydraulic classifiers with 4 spigots each. From (49), fed with 1.25 to 0-millimeter stuff; deliver spigots to (51) and overflows to (57).

51. Twenty-eight Evans jigs with 3 compartments each. Sieves are brass cloth, 20.25 × 40.625 inches, 8 to 20 meshes to the inch. The plungers make 210 strokes per minute of the following lengths in inches.

Jig Number.	Head Sieves.	Middle Sieves.	Tail Sieves.
1	0.625	0.562	0.50
2	0.44	0.375	0.31
3	0.375	0.31	0.25
4	0.25	0.19	0.19

From (50) and (59); deliver third cup discharges, from first two jigs of each separator, to (54); all first hutch products to (56); second hutch products, from jigs one, two, and three, to (56); second hutch products from jigs four, to (54); third hutch products, from jigs one and two, to (56); third hutch products, from jigs three and four, to (54); and all tailings to (44).

52. Three Evans hydraulic classifiers with 2 spigots each. From (49), fed with 1.25 to 0-millimeter stuff; deliver spigots to (53) and overflows to (57).

53. Six Evans jigs with 3 compartments each. Sieves are brass cloth, 20.25 × 40.625 inches, 8 to 20 meshes to the inch. The plungers make 210 strokes per minute having lengths like those in (51). From (52); deliver third cup discharges, from first jigs, to (54); all first, second, and third hutch products, from first jigs, to (56); third hutch products from second jigs, to (54); and all tailings to (44).

54. Settling and dewatering tank. From (48), (51), and (53); delivers spigots to (45) and overflow to (55).

55. Settling and dewatering tank. From (54); delivers settlings to (45) and overflow to (44).

56. Fifteen-inch fine-concentrates elevator with a 10-ply rubber belt having a speed of 470 feet per minute and malleable-iron buckets spaced 12 inches apart. From (51) and (53); delivers concentrates to (40).

57. Six V-shaped settling tanks. From (49), (50), and (52); deliver spigots to (58) and overflows to (44).

58. Fifteen-inch slimes elevator with a 10-ply rubber belt having a speed of

471 feet per minute and malleable-iron buckets, 8 × 14 inches, spaced 12 inches apart. Capacity 100 tons per 24 hours. From (35) and (57); delivers to (59).

59. Two trommels, 3 × 6 feet, having round punched holes 2 millimeters in diameter, speeds of 20 revolutions per minute, and slopes of 1.25 inches to the foot. From (58); deliver oversize to (51) and undersize, which is divided among 3 sections, to (34).

Slimes Plant.

60. Thirty 8-foot Callow tanks [29] having 60° slopes and made of No. 14 sheet steel. From (33), (34), (35), and (37); deliver spigots to (61) and overflows to the river.

61. Tank. From (60); delivers to (62).

62. Centrifugal pump. From (61); delivers to (63).

63. Sixteen Evans round tables, 17 feet in diameter, making 3 revolutions in 5 minutes, and having slopes of 1.25 to 1.50 inches to the foot. The decks of 8 are made of wood, 4 of linoleum, and 4 of cement. From (62); deliver concentrates to (64) and tailings to the river.

64. Tank. From (63); delivers to (65).

65. Centrifugal pump. From (64); delivers to (40).

Auxiliary Coarse-Concentrates Tanks.

66. Sixteen coarse-concentrates settling tanks, 4 series of 4 tanks each, only 8 used at a time. From (18) and (19); deliver settlings, via bottom gates, to (68) and overflows to (67).

67. Sixteen side tanks, 4 series of 4 each. From (66); deliver settlings periodically, via shovels, to (68) and overflows to (44).

68. Concentrates-storage tanks. From (66) and (67); deliver concentrates, via gates and chutes, to railroad bottom-dump cars.

Sections Nos. 1 and 2 differ from Section No. 6 as follows:

3. Omit. Feeding done by hand.

5. Omit. No hand picking.

Two trommels having punched holes 2.5 millimeters in diameter instead of 5 millimeters in diameter, in order to obtain mill height sufficient to feed through 8 on 2.5-millimeter stuff, to (69). From (12); deliver oversize to (69) and undersize to (28).

14. Omit.

21. Omit.

22. Omit.

23. One middlings-settling and dewatering tank under the floor. From (69); delivers spigot to (25) and overflow to (24).

28. Settling and dewatering box. From (13); delivers spigot to (29) and overflow to (34).

34. Three feed tanks for Wilfley tables. From (28), (29), (30), (59), and (69); deliver spigots to (36) and overflows to (43) or (60).

69. One Hancock jig which is a continuous movable-sieve power jig. The box, which is 3.5 feet wide and 24 feet long (inside dimensions), is divided into 6 compartments and has, at the tailing end, an adjustable slimes outlet. The sieve extends over 5 of these compartments and discharges its tailings into the sixth. The sieve is 2.42 × 18.79 feet (active area). Plunger makes 185 0.375-inch strokes per minute. The first compartment has a sieve with holes 5 millimeters in diameter, the second and third compartments have sieves with holes 8 millimeters in diameter, and the fourth and fifth compartments have sieves with holes 12.7 millimeters in diameter. This jig replaces (21) and (22)

in 2 sections; that is, it does the work of 32 2-compartment Evans jigs. From (13) and (70), fed with 8 to 2.5-millimeter stuff; delivers first, second, and third hutches to (18); fourth hutch to (70); fifth and sixth hutches to (23); and overflow slimy water to (34).

70. Ten-inch elevator with an 8-ply rubber belt having a speed of 435 feet per minute and malleable-iron buckets, 5 × 8 inches, set 12 inches apart. Capacity 50 tons per 24 hours. From (69); delivers to (69) or, if quality of product warrants it, to (18).

Section No. 3 differs from Section No. 6 as follows:

3. Omit. Feeding done by hand.

5. Omit. No hand picking.

33. Omit. Then, —

28. Settling and dewatering box. From (14); delivers spigot to (29) and overflow to (34).

34. Three feed tanks for Wilfley tables. From (28), (29), (30), and (59) deliver spigots to (36) and overflows to (43) or (60).

35. Two feed tanks for Wilfley tables. From (31); deliver spigots to (36) and overflows to (43) or (60).

Machinery for hand-picking the ore in sections 1, 2, and 3 has not been installed on account of the crowded condition of the mill and the difficulty of its installation.

The middlings department for sections Nos. 1, 2, and 3 differs from the middlings department for sections Nos. 4, 5, and 6 in that Harz 3-compartment jigs are used instead of Evans 3-compartment jigs.

TABLE 548. — ANALYSIS OF ORE, CONCENTRATES, AND TAILINGS. MILL 162.

	Percent	Oz. per Ton.		Percent.				
	Copper.	Silver.	Gold.	Silica.	Iron.	Sulphur.	Alumina.	Lime.
Crude ore	3.40	1.19	0.008	56.5	10.4	12.7	11.5	0.15
A — Coarse concentrates from (15), (17), (21), and (22)	10.03	3.28	0.019	26.7	24.2	30.9	4.8	0.10
B — Fine concentrates from (21), (22), (30), (32), (36), (38), (51), (53), and (63)	7.57	2.69	0.021	18.0	29.8	36.8	4.8	0.10
C — Slimes, settlings in (43)	2.31	0.88	0.004	58.4	2.8	3.6	22.5	0.20
Total concentrates and slimes, average by weight of A, B, and C	8.01	2.76	0.019	23.3	26.4	32.9	5.9	0.10
Tailings	0.66	0.23	0.002	77.7	1.8	1.7	12.4	0.10

1 Ton Crude = 0.3523 Ton Concentrate, or 2.84 tons into 1.
Loss in Copper, 16.9 percent.
Loss in Silver, 17.94 percent.

Power.

In June, 1906, under similar conditions as above described, except that the middlings section was running 11 more Evans jigs than at present, the section outlined above and one-third of the middlings section, while milling ore at the rate of 458 tons per 24 hours, indicated 184.4 horse-power on a 6-hour and 40 minutes test. This is a net value and does not include any portion of the belt and shaft friction in the middlings section or the main line shaft. The belts and shaftings in the three sections indicated 76 horse-power. These results were obtained by indicating a single 34 × 60-inch non-condensing Corliss engine.

The following figures were also obtained: With three sections and one middling section running, while milling ore at the rate of 1,374 tons per 24 hours, the indicated horse-power was 612.3.

Indicated horse-power per ton of ore per 24 hours	0.45	
Percent of total indicated horse-power to drive engine, ropes, shafting, and belting	27.70	percent
Engine and ropes	15.30	"
Shafting and belting	12.40	"
Percent of total power delivered to main line shaft to drive shafting and belting	14.60	"

Power for the mill is developed by two 44-inch turbines, working under a head of 42 feet, and transmitted by rope drive about 1,000 feet in length, having one right-angled turn. The wheels register 1,350 horse-power in driving the concentrator machinery.

Water.

The water is supplied by two Root rotary pumps rated at 14,000 gallons each per minute at full speed, and without allowance for slip. For 3,000 tons daily capacity of the mill, 17,000 gallons are required per minute, or about 25,000,000 gallons per day — about 8,300 gallons per ton of ore treated. This supply has to be pumped to a height of 88 feet and the power is furnished by a 39-inch turbine, running under a head of 42 feet.

Employed in the whole mill there are 198 men in 24 hours and the average rate is $3.16 per day of 8 hours. This includes carpenters, machinists, and other men engaged in repairs.

§ 1495. MILL NO. 163. SLIMES DEPARTMENT OF BASIN REDUCTION COMPANY, BASIN, MONTANA.[171] — Eighty 8-foot Callow settling tanks[29] receive the overflow from the Wilfley feed tanks in the main mill and the muddy water from the back end of all Wilfleys. The overflow from the Callow tanks goes to waste and the thickened pulp goes to a centrifugal pump which lifts it to a distributing box feeding Wilfley tables. The Wilfleys make two products; concentrates which are shipped to the smelter and tailings which go to waste dump via launder. A portion of the overflow from the Callow tanks is lifted by a centrifugal pump and used as wash water on the Wilfleys. A spare centrifugal pump is held in reserve to handle either the thickened pulp or water as necessity may demand.

In July, 1905, 60 Callow settling tanks saved 73,000 pounds of copper and 3,500 ounces of silver which was formerly going to waste. With more tables and a thicker pulp Mr. Callow anticipated a saving of 100,000 pounds of copper per month or 3.76% of all the copper shipped from this plant in the form of concentrates. He found, as a rule, that the values in these watery overflows on Butte ores represent from 8 to 10% of the values in the crude ore treated and also 8 to 10 % of the weight. He expects to bring down the overflow to 7 or 8 grams of solid per gallon of water. In the thickened pulp there are about 400 grams of solid per gallon which is sufficiently thick for Wilfley work, but when using vanners a pulp running 800 or 900 grams per gallon should be used.

The temperature of the water makes a big difference in the results. The warmer the water, the better the work.

In December, 1905, this plant saved over 80,000 pounds of copper from a feed of 2,000 gallons of slime water per minute which is delivered from a mill treating 1,000 tons per day. Mr. Callow makes the positive statement that he can save half of the values that were being lost in the slimes. Table 549 shows what is being accomplished by the Callow tanks.

TABLE 549. — SLIME-WATER MEASUREMENTS AT BASIN REDUCTION COMPANY'S PLANT.

Description.	Gallons per Minute.	Grams per Gallon.	Tons per Day.	Assays.		Total Contents 24 Hours.	
				Percent Copper.	Ounces Silver.	Pounds Copper.	Ounces of Silver per Ton.
Supply	1,792.7	41.15	117.16	2.800	2.81	6,559	329.0
Overflow	1,495.0	16.25	38.45	1.815	2.36	1,394	90.8
Settlings	297.5	154.50	73.13	3.500	3.34	5,106	244.3
Total	1,792.5	.....	111.58	.....	.....	6,500	335.1

NOTE. — 57 Callow settling tanks in use ..... 31.4 gallons per minute supply per tank.
30 Wilfley tables ..... 5.2 gallons per minute settlings per tank.
Ratio, 6.03-1.
Recovery by tanks: 62.5 percent of the solids, 77.75 percent of the copper, and 74.25 percent of the silver.

§ 1496. MILL No. 164. BUTTE REDUCTION WORKS, BUTTE, MONTANA. — This mill has a capacity of 500 tons per 24 hours, treats only custom ores.[186] The economic minerals of the district are chalcocite, bornite, chalcopyrite, pyrite, sphalerite, and some gold and silver values. The gangue is quartz and decomposed feldspar. The problem is to save the copper, gold, and silver.

Ore from railroad cars goes to (1).

1. Crude-ore bins. From railroad cars; deliver, via chutes, to (2).
2. Pan conveyor. From (1); delivers under (3).
3. Magnet No. 1. Comes within 1 inch of the ore and uses direct current of 8 amperes and 110 volts. From (2); delivers hammer heads, pick points, etc., to scrap heap and scrap-iron free ore to (4).
4. Grizzly with 2-inch spaces. From (3); delivers oversize to (5) and undersize to (6).
5. Blake breaker with a 15 × 24-inch jaw opening. From (4); delivers crushed ore to (6).
6. Elevator. From (4) and (5); delivers to (7).
7. Wood separator which is a long coarse trommel to take out chips, wedges, handles, and other pieces of wood. From (6); delivers waste wood to dump and cleaned ore to (8).
8. Magnet No. 2. Uses direct current of 8 amperes and 110 volts. From (7); delivers spikes, nails, screws, and even the smallest pieces of steel to scrap heap, and clean ore to (9).
9. Trommel with 2-inch holes. From (8) and (11); delivers oversize to (10) and undersize to (12).
10. Blake breaker with a 9 × 15-inch jaw opening. From (9); delivers crushed ore to (11).
11. Elevator. From (10); delivers to (9).
12. Trommel with 1.25-inch holes. From (9); delivers oversize to (13) and undersize to (14).
13. One 2-inch Woodbury bull jig. From (12); delivers concentrates to (36) and tailings to (17).
14. Trommel with 0.5625-inch holes. From (12); delivers oversize to (15) and undersize to (16).
15. One 1.25-inch Woodbury bull jig. From (14); delivers concentrates to (36) and tailings to (17).
16. Trommel with holes 3 millimeters in diameter. From (14); delivers oversize to (23) and undersize to (27).
17. Elevator. From (13), (15), (19), and (21); delivers to (18).

18. Trommel with 1.25-inch holes. From (17); delivers oversize to (19) and undersize to (20).

19. Blake breaker with a 9 × 15-inch jaw opening. From (18); delivers crushed ore to (17).

20. Trommel with 0.5625-inch holes. From (18); delivers oversize to (21) and undersize to (22).

21. Coarse rolls, 16 × 30 inches. From (20); deliver crushed ore to (17).

22. Trommel with holes 3 millimeters in diameter. From (20); delivers oversize to (23) and undersize to (27).

23. Two 0.5625-inch 2-compartment jigs. From (16) and (22); deliver concentrates to (36) and tailings to (24).

24. Elevator. From (23) and (26); delivers to (25).

25. Two trommels with holes 3 millimeters in diameter. From (24); deliver oversize to (26) and undersize to (27).

26. Two sets of fine rolls, 16 × 30 inches. From (25); deliver crushed ore to (24).

27. Collecting tank. From (16), (22), and (25); delivers to (28).

28. Woodbury slimes classifier. From (27); delivers spigots to (29) and overflow to (34).

29. Two 4-compartment fine jigs. From (28); deliver concentrates to (37) and tailings to (30).

30. Elevator. From (29); delivers to (31).

31. Two Pratt sizers. From (30); deliver oversize to (32) and undersize to (33).

32. Four 6-foot Monadnock mills. From (31); deliver crushed pulp to (33).

33. Twenty Wilfley tables. From (31), (32), and (33); deliver concentrates to (37), middlings to (33), and tailings to waste dump.

34. Five Wilfley tables for slimes. From (28); deliver concentrates to (37) and tailings to (35).

35. Three Wilfley tables. From (34); deliver concentrates to (37) and tailings to waste dump.

36. Elevator. From (13), (15), and (23); delivers to (38).

37. Elevator. From (29), (33), (34), and (35); delivers to (39).

38. Coarse-concentrates bin. From (36); delivers to smelter via cars.

39. Fine-concentrates bin. From (37); delivers to smelter via cars.

The large No. 1 magnet was purchased from the Electric Controller and Supply Company of Cleveland, Ohio. When it was first installed the face of the magnet was covered or protected with bronze metal which wore out so quickly that a change had to be made. The poles were originally 11 inches apart but are now only 1. Both magnets together catch nearly 100 pounds per day, which includes the smallest as well as the largest pieces of steel. These are successful and save much wear, tear, and time on the roll shells.

§ 1497. MILL NO. 165. BOSTON CONSOLIDATED MINING COMPANY.[19 93] — Situated at Garfield Beach, Salt Lake County, Utah. Capacity from 2,800 to 3,000 tons per 24 hours.

The economic minerals are chalcopyrite, chalcocite, and bornite in a porphyry gangue.[30] Some gold and silver is present. The average ores of the district run from 1.5 to 2.0% copper, 0.03 ounce of gold, and 0.5 ounce of silver per ton. The minerals are in general very finely disseminated, necessitating fine crushing.[182] The problem is to save the copper, gold, and silver. The mill is divided into 13 sections, each section containing 24 Nissen stamps, 22 Wilfley tables, 18 Johnston vanners, 4 classifiers, and 24 settling tanks. The ores come from Bingham Canyon, by rail, and are dumped to (1).

1. Structural-steel crude-ore bin, 20 × 35 × 300 feet, having a capacity of 15,000 tons. From the cars; delivers to (2).

2. Two 30-inch belt conveyors, running under the entire length of the crude-ore bin. From (1); deliver (one, via a short conveyor) to (3).

3. Two grizzlies with 1 × 2.5-inch bars set 1.25 inches apart. From (2); deliver oversize to (4) and undersize to (5).

4. Two style "K" No. 6 Gates gyratory breakers. From (3); deliver crushed ore to (5).

5. Two trommels, 4 × 10 feet, with 1.25-inch round holes punched in manganese steel. From (3) and (4); deliver oversize to (6) and undersize to (7).

6. Two No. 5 Gates short-head gyratory breakers. From (5); deliver crushed ore to (7).

7. Two belt conveyors, running up a 20° incline. From (5) and (6); deliver to (8).

8. One 18-inch horizontal belt conveyor at right angles to (7), equipped with an automatic tripper which distributes ore the full length of the crushed-ore bin and has a capacity of 15,000 tons. From (7); delivers to (9).

NOTE. — Above crushing plant crushes for the entire 13 sections. These sections are all similar, only one of them being described below.

9. Twenty-four Nissen stamps each weighing 1,500 pounds and crushing through a 28-mesh, 28-wire screen. From (8) and mortar water from (36); deliver pulp to (10).

10. Four 3-compartment wooden hydraulic classifiers of the Spitzkasten type. From (9); deliver the first spigots to (11), second spigots to (13), third spigots to (15), and overflows to (17).

11. Distributor. From (10); delivers to (12).

12. Six No. 5 Wilfley tables making 225 0.75-inch throws per minute. From (11); deliver concentrates to (34), middlings to (27), tailings to (33), and slimes and head waters to (21).

13. Distributor. From (10); delivers to (14).

14. Six No. 5 Wilfley tables making 225 0.75-inch throws per minute. From (13); deliver concentrates to (34), middlings to (25), tailings to (23), and head waters to (21).

15. Distributor. From (10); delivers to (16).

16. Six No. 5 Wilfley tables making 245 0.625-inch throws per minute. From (15); deliver concentrates to (34), middlings to (29), and tailings to (21).

17. Distributor. From (10); delivers to (18).

18. Twelve 8-foot Callow settling tanks.[29 84] From (17); deliver spigots to (19) and overflows to (37).

19. Distributor. From (18); delivers to (20).

20. Four No. 5 Wilfley tables making 260 0.5-inch throws per minute. From (19); deliver concentrates to (34) and tailings to (21).

21. Distributor. From (12), (14), (16), and (20); delivers to (22).

22. Six 8-foot Callow settling tanks. From (21); deliver spigots to (23) and overflows to (35).

23. Distributor. From (22); delivers to (24).

24. Four Johnston 6-foot vanners. From (23); deliver concentrates to (34) and tailings to (33).

25. One 8-foot Callow settling tank. From (14); delivers spigot to (28) and overflow to (35).

26. One Johnston 6-foot vanner. From (27); delivers concentrates to (34) and tailings to (33).

27. One 8-foot Callow settling tank. From (12); delivers spigot to (26) and overflow to (35).

28. One Johnston 6-foot vanner. From (25); delivers concentrates to (34) and tailings to (33).

29. Distributor. From (14) and (16); delivers to (30).

30. Four 8-foot Callow settling tanks. From (29); deliver spigots to (31) and overflows to (35).

31. Distributor. From (30); delivers to (32).

32. Twelve Johnston 6-foot vanners. From (31); deliver concentrates to (34) and tailings to (33).

33. General tailings launder. From (12), (14), (24), (26), (28), and (32); delivers to tailings dump.

34. Six concentrates bins, 16 feet square by 10 feet deep, sloping to the center with filter bottoms which are 18 inches in diameter and to which a vacuum pump may be attached to drain the concentrates. By launders from (12), (14), (16), (20), (24), (26), (28), and (32); deliver to (38).

35. Sump. From (22), (25), (27), and (30); delivers, via two 1,500-gallon centrifugal pumps, to (37).

36. Reservoir. From (37) and main water line; delivers main feed water to (9).

37. Sump. From (18) and (35); delivers, via two 1,500-gallon centrifugal pumps, to (36).

38. Browning crane hoist of 10 tons capacity. With a clam-shell bucket attached to the boom it will handle 100 tons of concentrates per hour very economically. From (34); delivers to railroad cars.

There is no elevator in the entire plant; everything runs by gravity from the crushed ore bins.[184] Exhaustive tests were made before constructing the mill, as regards different methods of crushing, size of particles, screen analysis, etc. As a result the crushing is done by Nissen stamps, and concentration on Wilfley tables, followed by Johnston vanners. The ores treated by the Boston Consolidated Copper Company, the Utah Copper Company, and the Steptoe Valley Smelting & Mining Company are all similar as regards economic minerals, gangue, and size of mineral particles. The methods of crushing and concentration vary at these three mills. The Utah Copper Company crushes with rolls and Chili mills, and the Steptoe Valley Smelting & Mining Company uses Huntington mills. It will be interesting to watch the results of these three mills, using, as they do, different methods of concentration.

Labor and Wages.

There are employed, including mechanics, machinists, and blacksmiths, about 160 men who are paid on an average of $2.50 per day, with $2.25 and $3.50 as the extremes.

Power and Water.

Power is purchased from the Telluride Power Company and is generated in Provo Canyon, Logan Canyon, and on Bear River, Utah. The power, received, is a 40,000-volt current, but the mill has a large transformer house, capable of transforming 4,000 horse-power from 80,000 volts to 400 volts.

The different machines are run by individual motors, that is, one motor runs 20 stamps, one motor runs 22 Wilfley tables, etc. The pumps are all direct connected to motors.

About 2,700 horse-power is required for the entire plant which includes pumping all the water 380 feet.

Each Nissen stamp requires from 10 to 11.66 gallons of water per minute, each Wilfley table 5 gallons per minute, and each Johnston vanner about 2 gallons per minute. The classifiers are using about 2 gallons of water per minute in the first compartments, a little less in the second compartments, and none in the third compartments.

The total amount of water required is about 2 gallons per minute for each ton of ore treated per 24 hours.

§ 1498. MILL NO. 166. CACTUS MILL OF THE NEWHOUSE MINES AND SMELTERS.[19 93] — Located at Newhouse, Utah, 7 miles by rail from Frisco, Utah.[54] Capacity 1,000 tons per 24 hours, built in two units of 500 tons capacity each.[55]

The ore consists of the economic minerals, pyrite and chalcopyrite, carrying some gold and silver, with some gray and native copper, in a granite gangue.[57] The problem is to save the copper and precious metals. The ore is pushed out of the mines, through a tunnel, by electric locomotives in trains of from 14 to 21 cars, seven of which are run together into a hollow steel-cylinder, open at the top, which is then revolved by compressed air.[131] Each car holds 4 tons, and the 28 tons are dumped in 30 seconds. From this bin the ore is drawn to (1).

Rock House at Mine.

1. Grizzly, 45 feet wide, with 50.8-millimeter spaces between the bars which are old 56-pound rails cut in 15-foot lengths and having slopes of 45°. From the mine; delivers oversize to (2) and undersize to (3).

2. Three Blake breakers with 10 × 20-inch jaw openings breaking to 2 inches. The jaw plates are made of Canda steel, weigh 1,060 pounds, and have a life of 90 days. The toggles are of steel and have an indefinite life (no wear on toggles; sometimes they break). The capacity of each breaker is 500 tons in 24 hours. From (1); deliver crushed ore to (3).

3. Bin, 20 × 14 × 54 feet with a flat bottom. From (1) and (2); delivers to (4).

4. Railroad cars with a capacity of 44 tons. From (3); deliver ore three miles to (5) at the mill.

Mill in Two Sections, each of 500 Tons Capacity.

(Only one section described below.)

5. Steel bin with a capacity of 1,000 tons. From (4); delivers to (6).

6. Four plunger feeders, 5 × 15 inches, placed at intervals in front of (5). From (5); delivers to (7).

7. Belt conveyor with a 6-ply belt, 22 inches wide, having a speed of 150 feet per minute. Requires 2 horse-power and has a life of 120 weeks. From (6); delivers to (8).

8. Elevator with a 10-ply belt, 13 inches wide, having a speed of 350 feet per minute, and a life of 32 weeks. The cups are of pressed steel, 12 inches long by 7 inches wide, placed 18 inches apart, and have a life of 20 weeks. The height of lift is 70 feet, capacity 500 tons per 24 hours, and 10 horse-power is required to operate it. From (7) and (11); delivers to (9).

9. Trommel having 15.875-millimeter round holes punched in steel plate, a length of 60 to 66 inches, a diameter of 42 inches, and a slope of 1.7 inches to the foot. It makes 9 revolutions per minute and the screen lasts 90 days. From (8), fed with 50.8 to 0-millimeter stuff; delivers oversize to (10) and undersize to (12).

10. Gates gyratory breaker, style "D," breaking to 25.4 millimeters. There are 2 feed openings each 6 × 21 inches. The head is made of manganese steel, weighs 420 pounds before using, 250 pounds after using, and lasts 200 days. The liners are of manganese steel, weigh 350 pounds before using, 170 pounds after using, and last 150 days. The capacity is 150 tons per 24 hours. From (9); delivers crushed ore to (11).

11. Rolls, 16 × 36 inches, run dry and set to crush through 15.875 milli-

meters. Different make in each section; one set was made by Allis-Chalmers; the other, Bolthoff rolls, by the Power and Mining Machinery Company. The shells are of Midvale steel, weigh 3,800 pounds per pair before using, 450 pounds per pair after using, and have a life of 155 days. The thickness before using is 3 inches, after using 0.75 to 1 inch. The rolls are set 0.5 inch apart; they make 48 revolutions per minute and crush 450 tons per 24 hours. The advantage of the Allis-Chalmers rolls is liberal proportioning of parts, insuring great steadiness in running. From (10); deliver crushed ore to (8).

12. Double conical trommel. The inner screen has 7.0-millimeter and outer screen has 3.5-millimeter round holes punched in 3.5-millimeter steel. The inner screen is 36 and 48 inches in diameter and 72 inches long; the outer screen is 48 and 60 inches in diameter and 66 inches long. The slope of the screen is 2 inches per foot. These screens make 9 revolutions per minute and last 65 days. First water is introduced here. From (9); delivers material larger than 7 millimeters to (13), 7 to 3.5-millimeter stuff to (14), and undersize to (18).

13. Two Harz 3-sieve jigs. Each sieve is 22 × 34 inches, of 8 mesh, 16 brass wire and has an opening of 1.5 millimeters. These jigs are working as single-compartment jigs and make heads in the center and tailings at both ends. The plungers, 22 × 34 inches, make 140 0.75-inch strokes per minute. There is no water with the feed. All side discharges and hutches are concentrates. The tailings are middlings. A pipe side discharge is used. From (12), fed with 15.875 to 6.35-millimeter stuff; deliver concentrates to (41) and tailings to (15).

14. Two Harz 3-sieve jigs. Each sieve is 22 × 34 inches, of 8 mesh, 16 brass wire, and has an opening of 1.5 millimeters. These jigs are working as single-compartment jigs and make heads in the center and tailings at both ends. The plungers, 22 × 34 inches, make 140 0.75-inch strokes per minute. There is no water with the feed. All side discharges and hutches are concentrates. The tailings are middlings. A pipe side discharge is used. From (12), fed with 7.0 to 3.5-millimeter stuff; deliver concentrates to (41) and tailings to (15).

15. Wet elevator with a 10-ply belt, 17 inches wide, having a speed of 400 feet per minute and a life of 28 weeks. The cups are of pressed steel, 16 inches long by 8 inches wide, placed 18 inches apart, and have a life of 52 weeks. The height of lift is 70 feet, capacity 300 tons per 24 hours, and it requires 15 horse-power. From (13), (14), and (17); delivers to (16).

16. Trommel having 3.5-millimeter round holes punched in steel plate, a length of 78 inches, a diameter of 42 inches, and a slope of 1.25 inches per foot. It makes 12 revolutions per minute. The screen lasts 65 days. From (15); delivers oversize, via storage tank, to (17) and undersize to (18).

17. Wet rolls, 16 × 36 inches, crushing to 3.5 millimeters. Made by Allis-Chalmers Company. The shells are of Midvale steel, weigh 3,800 pounds per pair before using, 450 pounds per pair after using, and last 70 days. The thickness before using is 3 inches, after using 0.75 to 1.0 inch. The rolls are set 0.125 inch apart, make 70 revolutions per minute, and crush 300 tons per 24 hours. From (16); deliver crushed ore to (15).

18. Two trommels with 2-millimeter round holes punched in steel plate which lasts 55 days. Other details as in (16). From (12) and (16); deliver oversize to (19) and undersize to (20).

19. Four Harz 3-sieve jigs. Each sieve is 22 × 34 inches, of 5 mesh, 14 brass wire, and has an opening of 3.5 millimeters. The plungers, 22 × 34 inches, make 200 strokes per minute. Length of plunger stroke in first compartments is 0.5 inch, in second compartments 0.375 inch, and in third compartments 0.5 inch. There is no water in the feed, but water is added to jigs. From

(18), fed with 3.5 to 2.0-millimeter stuff; deliver the first and second discharges and hutch products, as concentrates, to (41); the third discharges and hutch products, as middlings, to (22); and the tailings to waste.

20. Two trommels with 1-millimeter diagonal slotted holes and other details as in (16). From (18); deliver oversize to (21) and undersize to (26).

21. Four Harz 3-sieve jigs. Each sieve is 22 × 34 inches, of 6 mesh, 14 brass wire and has an opening of 2.5 millimeters. The plungers, 22 × 34 inches, make 250 strokes per minute. Length of plunger stroke in first compartments is 0.375 inch, in second compartments is 0.25 inch, and in third compartments is 0.375 inch. There is no water in the feed, but water is added to jigs. From (20), fed with 2.0 to 1.0-millimeter stuff; deliver the first and second discharges and hutch products, as concentrates, to (41); the third discharges and hutch products, as middlings, to (22); and the tailings to waste.

22. Two elevators with 10-ply belts, 17 inches wide, having a life of 52 weeks. The cups are of pressed steel, 16 inches long by 8 inches wide, placed 20 inches apart, and have a life of 52 weeks. The height of lift is 32 feet and speed 400 feet per minute. From (19), (21), (25), and (27); deliver to (23).

23. Two trommels with 1.33-millimeter round punched holes (10 mesh). From (22); deliver oversize to (24) and undersize to (25).

24. Four Harz 3-sieve jigs. Each sieve is 22 × 34 inches, of 6 mesh, 14 brass wire, and has an opening of 2.5 millimeters. The plungers, 22 ×34 inches, make 240 strokes per minute. Length of plunger stroke in first compartments is 0.375 inch, in second compartments 0.25 inch, and in third compartments 0.25 inch. Water with feed and also added to jigs. From (23); deliver all three discharges and hutch products, as concentrates, to (41) and the tailings to waste.

25. Four Wilfley tables, making 240 0.75-inch strokes per minute. From (23) and (25); deliver concentrates to (42), middlings to (25), slimes to (35), and tailings to waste.

26. Two Calumet classifiers with 4 pockets each. From (20), fed with 1 to 0-millimeter stuff; deliver first spigots to (27), second spigots to (28), third spigots to (29), fourth spigots to (30), and overflows to (31).

27. Two Wilfley tables, making 240 0.625-inch strokes per minute. From (26); deliver concentrates to (42), middlings to (22), slimes to (35), and tailings to waste.

28. Two Wilfley tables making 240 0.5-inch strokes per minute. From (26); deliver concentrates to (42), slimes to (35), and tailings to waste.

29. Two Wilfley tables making 240 0.5-inch strokes per minute. From (26); deliver concentrates to (42), slimes to (35), and tailings to waste.

30. Two Wilfley tables making 240 0.5-inch strokes per minute. From (26); deliver concentrates to (42); slimes to (35), and tailings to waste.

31. Two distributors. From (26); deliver to (32).

32. Eight cone settlers. Diameter at top 8 feet and depth 6 feet 4 inches. The angle of the sides is 60° from the horizontal. The discharge is 1.25 inches pinched to 0.375 inch. From (31); deliver settlings to (33) and overflows to (35).

33. Distributor. From (32); delivers to (34).

34. Four Wilfley slime tables. From (33); deliver concentrates to (42), slimes to (35), and tailings to waste.

Slimes Department.

35. Sump which is a wooden tank 10 feet in diameter by 8 feet deep. From (25), (27), (28), (29), (30), (32), (34), (40), and drainings from jig concentrates; delivers to (36).

36. Centrifugal pump. Size of suction is 8 inches, discharge 6 inches, and the lift is 40 feet. This is a common cast-iron pump without lining and lasts 52 weeks. From (35); delivers to (37).

37. Eight slimes-settling tanks which are cylinders with conical bottoms. Diameter 10 feet, depth to top of cone 4.5 feet, and total depth 10 feet. From (36); deliver settlings to (39) and overflows to (38).

38. Tank of 3,600 gallons capacity from which all jig wash water is supplied. From (37).

39. Distributor. From (37); delivers to (40).

40. Four Wilfley slime tables using short, quick strokes. From (39); deliver concentrates to (42), slimes to (35), and tailings to waste.

41. Launder to basement. Receives all jig concentrates from (13), (14), (19), (21), and (24); delivers, automatically, via tram and cars, to smelter.

42. Launder for all table concentrates. From (25), (27), (28), (29), (30), (34), and (40); delivers, via receiving box and tram, to railroad cars and smelter.

All tailings launders are glass lined.[56]

The ore is said to average 4% copper and $2 per ton in gold and silver. The concentrates vary considerably, depending largely on the ore. Jig concentrates run as high as 25 to 30% copper and sometimes as low as 15%. The table concentrates usually run a little lower than the jig concentrates.[141] The extraction is from 80 to 85% of the copper content of the ore.

The labor includes besides the foreman, 1 roll man, 3 jig men, 2 trammers, 1 table man, and 1 oiler, or a total for both sections of 8 men for each 8-hour shift and 2 men at the rock house at mine.

Power and Water.

Power for both mine and mill is supplied by three 300 horse-power Babcock and Wilcox, internal-superheating water-tube boilers, operated under 170 pounds pressure. The feed water is distilled by passing through the surface condensers. An air compressor, and two 400-kilowatt Westinghouse turbine generators are operated. The breakers at the rock house are driven by a 75 horse-power Westinghouse induction motor and a similar 150 horse-power motor runs the mill machinery, with the exception of the tables, which have a separate 20 horse-power motor.

Water is collected from Wah Wah springs by 4 miles of modern pipe and is conveyed 8 miles, through 12 and 14-inch pipe, to the reservoir above the mill. It is estimated that 1,200 gallons per minute are obtained. Approximately 1,440 gallons of water are used per ton of ore treated and the amount of water that is pumped back after settling is about 50%.

§ 1499. MILL NO. 167. UTAH COPPER COMPANY, GARFIELD PLANT, GARFIELD, UTAH.[104] — The mill has a capacity of 6,000 tons per 24 hours. The economic minerals are chalcocite and bornite, with a considerable quantity of chalcopyrite. Some gold and silver is present. The copper mineral is finely and uniformly disseminated throughout the porphyry gangue, necessitating fine grinding.[182] The average content of the ore is 2% copper, 0.015 ounce gold, and 0.15 ounce silver per ton of ore. The problem is to save the copper, gold, and silver.

The mill is built in 12 sections, each having a capacity of 500 tons per 24 hours. Six of these sections constitute a so-called "unit." The two units are exactly alike and each has its own coarse-crushing department, the term "unit" being applied for identification purposes only and in order to describe one complete group of departments.

The ore comes from Bingham Canyon,[150] a distance, by rail, of 27 miles, via Denver & Rio Grande Railroad, and goes to (1).

1. Scales. On cars, from mine; goes to (2).

2. Coarse-ore storage bin, 600 feet long by 41 feet wide by 28 feet deep, flat bottomed and holds 25,000 tons. Gates, 20 inches square, in two lines in bottom, operated by compressed air. Cylinders 8 × 25 inches; 4-way air valve operated by hand. From (1); delivers to (3) or (5).

3. Larries,[184] electric cars of 5 tons capacity on two tracks below (2). From (2); deliver, via bin, to (4).

One Unit Only.

4. Two grizzlies, 6 feet wide by 10 feet long, with 1.5-inch spaces between the bars. From (3); deliver oversize to (5) and undersize to (6).

5. Two Gates breakers of the 7.5 "K" type, breaking to about 1.5 inches. The feed comes, via 6 air-operated gates, to each breaker. Three thousand tons can go to the breakers from (2), if so desired, by gravity. From (2) or (4); deliver crushed ore to (6).

6. Two 24-inch elevators having speeds of 400 feet per minute, buckets, 8 × 24 inches, set 24 inches apart and elevating the ore 58 feet. From (4), (5), and (8); deliver to (7).

7. Four trommels, 4 × 9 feet, with screens having 1.25-inch holes and 0.25-inch wires, slopes of 2 inches to the foot, and making 24 revolutions per minute. From (6); deliver oversize to (8) and undersize to (9).

8. Rolls, 20 × 54 inches, making 60 revolutions per minute with a spring pressure of 300,000 pounds. From (7); deliver crushed ore to (6).

9. Twenty-four inch elevator having a speed of 375 feet per minute, buckets, 8 × 24 inches, set 24 inches apart and elevating the ore 59 feet. From (7); delivers to (10).

10. Two automatic samplers patterned after the "Vezin" type, except that the cones are inverted so that the sample drops through the rim to the outside of the pan or inverted cone, and the main stream passes on through an opening in the bottom. Cuts out 5% of the ore. From (9) of both units; deliver total sample, via screw conveyor, to (11) and reject to (13).

11. Automatic sampler like (10). Cuts out 5%. From (10); delivers sample, via barrel-type mixer, to (12) and reject to (13).

12. Automatic sampler like (10). Cuts out 5% or 0.25 pound of ore per ton milled. From (11); delivers sample to assayer and reject to (13).

13. Two portable 24-inch conveyors 150 feet long and reversible, as to travel of belts and frames, so as to discharge at any point over (14). Frames run on 2 tracks. From (10), (11), and (12); deliver to (14).

14. Crushed-ore bin for both units, 600 feet long by 20 feet wide by 25.5 feet deep. Bottom hoppered longitudinally. Bin has a total capacity of 15,000 tons and is divided into halves for each unit. From (13); delivers, via gates, 11 inches square, to (15).

One Section Only.

15. Two automatic plunger feeders with plungers, 7 × 9 inches, double acting and operated by eccentrics. Supported by guide rods, the plungers work freely in a 9 × 11-inch box, with a variable stroke of 4 inches, more or less, and the eccentric makes 40 revolutions per minute. From (14); deliver to (16).

16. Twenty-four inch elevator having a speed of 360 feet per minute, buckets, 8 × 24 inches, and elevating the ore 54 feet. From (15) and (18); delivers to (17).

17. Four trommels, 3.33 × 7.5 feet, with rolled-slot wire-cloth screens having 0.088-inch openings, slopes of 1.125 inches to the foot, and making 22 revolutions per minute. From (16); deliver oversize to (18) and undersize to (19).

18. Rolls, 15 × 37.5 inches, crushing to about 10 mesh and making 80 revolutions per minute. From (17); deliver crushed ore to (16).

19. Two dewatering screens, 4.66 feet long by 2.33 feet wide, with rolled-slot wire-cloth screens having 0.088-inch openings and slopes of 45°. From (17); deliver oversize to (20) and undersize to (25).

20. Six 2-compartment jigs with 20 × 30-inch sieves having slotted holes 0.088 inch wide and plungers making 140 0.75-inch strokes per minute. From (19) and (25); deliver both hutch products to (21) and tailings to (22).

21. Four Wilfley tables making 245 0.875-inch throws per minute. From (20); deliver concentrates to (34), middlings and tailings to (22).

22. Twenty-four inch elevator having a speed of 400 feet per minute, buckets, 8 × 24 inches, and elevating the ore 58 feet. From (20) and (21); delivers to (23).

23. Three sheet-steel cylindrical feed-tanks, 10 feet in diameter and 8 feet high. From (22); deliver spigots to (24) and overflows to (28).

24. Three Garfield 6-foot Chili mills with rolled-slot wire-cloth screens having 0.027-inch openings. From (23); deliver pulp to (25).

25. Two 4-spigot classifiers each having four expanding hoppers. From (19) and (24); deliver first and second spigots to (20), third spigots to (31), fourth spigots to (27), and overflows to (26) and (28).

26. Ten cone-tanks, 9.5 feet in diameter with 60° slopes. From (25); deliver spigots to (29) and overflows to (33).

27. Twenty Johnston vanners with corrugated belts, 6 feet wide, and making 130 2-inch throws per minute. From (25) and (30); deliver concentrates to (34) and tailings to (32).

28. Sixteen cone-tanks, 7 feet in diameter with 60° slopes. From (23) and (25); deliver spigots to (29) and overflows to (33).

29. Forty Johnston vanners with smooth belts, 6 feet wide, and making 120 2-inch throws per minute. From (26) and (28); deliver concentrates to (34) and tailings to (30).

30. Ten cone-tanks, 9.5 feet in diameter with 60° slopes. From (29); deliver spigots to (27) and (31), and overflows to (33).

31. Thirty-two Johnston vanners with corrugated belts, 6 feet wide, and making 130 2-inch throws per minute. From (25) and (30); deliver concentrates to (34) and tailings to (32).

32. Tailings launder and automatic sampler which consists of a cutter swinging across the entire width, and at the end, of the launder. This cut is made every 6 minutes and takes out 5% of the stream during the time that the cut is actually being made. The actual sample taken is 1.2 pounds per ton of ore treated and this sample is still further reduced by a rotating cutter, which takes a second sample of 3% from the first sample. From (27) and (31); delivers to tailings dump.

33. Settling pond for concentrates-bin overflow. From (26), (28), (30), and (35); delivers, periodically, to (35).

34. Centrifugal pump. From (21), (27), (29), and (31); delivers, via launder, to (35).

35. Ten concrete concentrates-bins, 23 feet long by 15 feet wide by 11 feet deep, having drainage through bottoms to (33) and overflows, by launders, from any bin to any other. From (33) and (34); deliver to (36) and drainage to (33).

36. Gantry clam shells load concentrates, from (35) into cars, whence they go to smelter of the Garfield Smelting Company at Garfield.

An approximate analysis of the crude ore and products follows:

	Crude.	Concentrates.	Tailings.
Copper	2.00 percent	25 to 30 percent	0.43 percent
Silica	67.00 "	20 " 23 "	
Iron	2.50 "	17 " 20 "	
Lime	0.25 "		
Molybdenum		1.50 "	
Gold		$5.00 per ton	
Silver		2.5 to 3 ounces per ton	

Labor and Wages.

The mill runs 7 days a week and 3 shifts per day. The base scale for operators of machinery is $2.50 per 8-hour shift. Ordinary labor about the mill receives from $2 to $2.25 for the same length shift. Higher classed labor, such as the mechanical force, receive various higher rates, so that the average rate paid to all operators and employees is about $2.60.

Power Plant.

The building is of steel and brick, with an engine room about 290 feet long by 73 feet wide, in which are located two Allis-Chalmers compound-condensing steam engines, furnishing 1,250 kilowatts each, and three Nordberg compound-condensing steam engines, furnishing 2,000 kilowatts each, a total of 8,500 kilowatts.

There are 20 Heine boilers of 410 horse-power each, nominal rating, and carrying 175 pounds of steam. These are fired by two American stokers for each boiler and use artificial draft furnished by Buffalo fans. A 50 horse-power Ames automatic single-cylinder engine drives the stokers, and the coal, delivered in bins over the boilers, discharges into the stokers through 12-inch pipes.

The primary voltage of the generator is 4,000 volts, and a 42,000-volt current is sent over to Bingham, 17 miles distant.

The total mill will require from 4,000 to 5,000 horse-power and, of this, 1,050 horse-power will be required in pumping water to a height of 200 feet. The mine will require 500 horse-power and the Copperton mill, of 800 tons capacity, about 1,000 horse-power.

Pumping Equipment.

There are three 2-stage centrifugal pumps (D'Olier Engineering Company, Philadelphia, Pa.). No. 1 pumps 2,500 gallons per minute and is run by a 250 horse-power, 4,000-volt induction motor. No. 2 pumps 3,500 gallons per minute and is run by a 350 horse-power, 4,000-volt induction motor. No. 3 pumps 4,500 gallons per minute and is run by a 450 horse-power, 4,000-volt, induction motor.

Mr. Janney says that 1 ton of ore requires 6 tons of water, or 1 gallon per minute per ton in 24 hours.

The vanners used are modeled after the Johnston suspended vanner as manufactured by the Risdon Iron Works. It has been found, by experiments, that the corrugated vanner belts make a better recovery with a coarse feed than the smooth vanner, and vice versa with the fine feed.

The rolls and Chili mills were built after the design of the Engineering Department of the company. The object in using such coarse screens in the mills is to save sliming and wear, and increase the capacity.

Mr. Jackling [104] believes in using flanged belt conveyors when the belt is to run up a steep incline; but on level work he thinks a perfectly flat belt, a little wider than absolutely necessary, is proper. He does not believe in using a narrow belt and turning up the edges with pulleys, rollers, etc. It will be noticed that graded crushing is carried to the extreme in this mill.

§ 1500. MILL No. 168. CAUCASUS MILL, THE CAUCASUS COPPER COMPANY LIMITED, DZANSAUL, KUTAIS, RUSSIA.— The capacity of the new mill is 500 tons per 24 hours.[2] The economic mineral is chalcopyrite in a siliceous gangue occurring in an impregnated stratum. Formerly wet concentration was used, but the ore slimed so badly, the silica in the concentrates was so high, and the iron content so low, that it was necessary to suspend operations and a Wetherill magnetic separating plant was installed. The crude ore averages 3.1% copper carrying small gold and silver values. The problem is to save the copper, gold, and silver.

Tram cars with ore from the mine are dumped by revolving tipples to (1).

1. Crude-ore storage bin, No. 1, having a capacity of 300 tons. From mine cars; delivers, via two gates and chutes, to (2).

2. Two automatic shaking feeders, 6 feet long, having 1.5-inch perforations in the bottoms. From (1); deliver oversize to (3) and undersize to (4).

3. Two breakers, No. 1, set to break to 2.5 inches. From (2); deliver crushed ore to (4).

4. Twenty-inch belt conveyor "A," having a conveying length of 100 feet and elevating the ore 17 feet. From (2), (3), and (11); delivers to (5).

5. Grizzly with 1-inch spaces between the bars, divided into three sections lengthwise, each 5 feet long, and having slopes of 40°. From (4); delivers oversize, via chute, to (6) and undersize, via chute, to (12).

6. Thirty-eight inch belt conveyor "B" used as a picking belt, having a conveying length of 95 feet and elevating the ore 14 feet. From (5); delivers hand-picked ore running 8% in copper or better, via chutes, to (7) and lower grade to (8).

7. Rich-ore bins, No. 3, having a total capacity of 125 tons. From (6); deliver, via 3 gates and chutes, to tram cars and thence to (81).

8. Sixteen-inch belt conveyor "C" having a conveying length of 140 feet and elevating the ore 47 feet. From (6); delivers to (9).

9. Storage bins, No. 2, having a total capacity of 250 tons. From (8); deliver, via two gates and chutes, to (10).

10. Two automatic plunger feeders. From (9); deliver to (11).

11. Two breakers, No. 2, set to break to 1 inch. From (10); deliver crushed ore to (4).

12. Eighteen-inch belt conveyor "D" having conveying length of 65 feet and elevating the ore 5 feet. From (5), weighed in transit by a Blake-Denison weigher and delivered to (13).

13. Automatic sampler. From (12); delivers sample to (14) and reject to (17).

14. Rolls, 14 × 24 inches. From (13); deliver crushed ore to (15).

15. Sample floor. From (14); sample cut down, partial sample taken, and delivered to (16) while reject goes to (17).

16. Sample grinder. From (15); delivers crushed sample to assayer.

17. Sixteen-inch belt conveyor "E" having a conveying length of 85 feet and elevating the ore 16 feet. From (13) and (15); delivers, via chute, to (18) or, if ore is dry, to (19).

18. Drying tower which is made up of a shaft furnace, 5 feet square by 40 feet high, having horizontal bars running through it, six parallel layers all running in the same direction and one below the other, and then six similar layers running at right angles to the above, and so on until eight such units or 48 layers are represented. The ore is fed to this furnace with a bell-hopper feeder and, as it falls through the shaft, is well scattered by the staggered bars. Adjacent to this shaft is an oil-burning fire box, 2.5 feet deep by 5 feet wide and 25 feet high, opening into the drying shaft in two places, one near the bottom and one

near the top. No bars are placed in the shaft near these entrance ports for the hot gases, which escape at the top of the shaft at one side of the feeder. From (17); delivers dry ore, via water-cooled screw conveyor and chute, to (19).

19. Twenty-two inch belt conveyor "G" having a conveying length of 225 feet and elevating the ore 22 feet. From (17) or (18), (24), (25), (29), (33), and (34); delivers, via chute, to (20).

20. Screening tower, No. 1, having screens with holes 0.5 inch, 0.1875 inch, 1.5 millimeters, and 0.5 millimeter. From (19); delivers, via chutes, 1.0 to 0.5-inch material to (21), 0.5 to 0.1875-inch material to (26), 0.1875-inch to 1.5-millimeter material to (30), 1.5 to 0.5-millimeter material to (35), and 0.5 to 0.0-millimeter material to (52).

21. Two 16-inch belt conveyors "H" and "H_1" having conveying lengths of 25 feet and running level. From (20); deliver, via chutes, to (22).

22. Sixteen-inch belt conveyor "I" having a conveying length of 243 feet and elevating the ore 51 feet. From (21); delivers to (23) or, when (23) is full, to (24).

23. Bin, No. 4, having a capacity of 125 tons. From (22); delivers, via two gates, chutes, and automatic feeders, to (25).

24. Bin, No. 6, having a capacity of 60 tons. From (22) and (27); delivers to (19).

25. Two rolls, No. 1, crushing to 0.5 inch. From (23); deliver crushed ore to (19).

26. Two 16-inch belt conveyors "J" and "J_1" having conveying lengths of 30 feet and running level. From (20); deliver, via chutes, to (27).

27. Sixteen-inch belt conveyor "K" having a conveying length of 190 feet and elevating the ore 51 feet. From (26); delivers to (28) or, when (28) is full, to (24).

28. Bin, No. 5, having a capacity of 125 tons. From (27); delivers, via two gates, chutes, and automatic feeders, to (29).

29. Two rolls, No. 2, crushing to 0.1875 inch. From (28); deliver crushed ore to (19).

30. Sixteen-inch belt conveyor "L" having a conveying length of 25 feet and running level. From (20); delivers, via chute, to (31).

31. Sixteen-inch belt conveyor "M" having a conveying length of 227 feet and elevating the ore 45 feet. From (30); delivers to (32) or, when (32) is full, to (33).

32. Bin, No. 7, having a capacity of 100 tons. From (31); delivers, via two gates, chutes, and automatic feeders, to (34).

33. Bin, No. 8, having a capacity of 60 tons. From (31); delivers to (19).

34. Two rolls, No. 3, crushing to 1.5 millimeters. From (32); deliver crushed ore to (19).

35. Sixteen-inch belt conveyor "P_2" having a conveying length of 110 feet and elevating the ore 32 feet. From (20); delivers either to (36) or (40).

36. Sixteen-inch belt conveyor "N'_2" having a conveying length of 27 feet and elevating the ore 11 feet. From (35); delivers to (37).

37. Sixteen-inch belt conveyor "Q_2" having a conveying length of 127 feet and elevating the ore 15 feet. From (36); delivers to (38).

38. Storage bin, No. 10, having a capacity of 750 tons. From (37); delivers, via 7 gates, chutes, and automatic feeders, to (39).

39. Sixteen-inch belt conveyor "R_2" having a conveying length of 125 feet and elevating the ore 7 feet. From (38) via traveling plunger feeder and distributor; delivers to (40).

40. Sixteen-inch belt conveyor "N_2" having a conveying length of 95 feet and elevating the ore 35 feet. From (35) and (39); delivers, via chutes, to (41).

41. Sixteen-inch belt conveyor "O_2" having a conveying length of 178 feet and elevating the ore 29 feet. From (40); delivers to (42).

42. Three bins, No. 12, each having a capacity of 12 tons. From (41); each delivers, via two automatic worm feeders, to (43).

43. Twelve mechanical roasters, No. 2, of the Herreshoff type with six hearths each, using crude oil for fuel. From (42); deliver roasted ore to (44).

44. Swinging conveyor, No. 1, 1,136 feet long and water-cooled. From (43); delivers cool ore, via chute, to (45).

45. Sixteen-inch belt conveyor "T_2" having a conveying length of 128 feet and elevating the ore 42 feet. From (44); delivers, via chute, to (46).

46. Screen tower, No. 2, having screens with 0.5-millimeter holes. From (45); delivers oversize to (47) and undersize to (63).

47. Sixteen-inch belt conveyor "U_2" having a conveying length of 159 feet and elevating the ore 27 feet. From (46); delivers either to (48) or (66).

48. Storage bin, No. 16, having a capacity of 75 tons. From (47); delivers, via 5 automatic feeders, to (49).

49. Five Wetherill roll-type magnetic separators. From (48); deliver concentrates to (50), middlings, via chute, to (68), and tailings to (51).

50. Concentrates bin having a capacity of 25 tons. From (49) and (67); delivers, via tram cars and track scales, to (82).

51. Tailings bin having a capacity of 75 tons. From (49) and (67); delivers, via tram cars and track scales, to the tailings dump.

52. Sixteen-inch belt conveyor "P_1" having a conveying length of 106 feet and elevating the ore 32 feet. From (20); delivers either to (53) or (57).

53. Sixteen-inch belt conveyor "N'_1" having a conveying length of 21 feet and elevating the ore 9 feet. From (52); delivers to (54).

54. Sixteen-inch belt conveyor "Q_1" having a conveying length of 122 feet and elevating the ore 15 feet. From (53); delivers to (55).

55. Storage bin, No. 9, having a capacity of 700 tons. From (54); delivers, via seven gates, chutes and automatic feeders, to (56).

56. Sixteen-inch belt conveyor "R_1" having a conveying length of 125 feet and elevating the ore 7 feet. From (55) via traveling plunger feeder and distributor; delivers to (57).

57. Sixteen-inch belt conveyor "N_1" having a conveying length of 59 feet and elevating the ore 22 feet. From (52) and (56); delivers, via chute, to (58).

58. Sixteen-inch belt conveyor "O_1" having a conveying length of 185 feet and elevating the ore 29 feet. From (57); delivers to (59).

59. Three bins, No. 11, each having a capacity of 12 tons. From (58); each delivers, via two automatic worm feeders, to (60).

60. Twelve mechanical roasters, No. 1, of the Herreshoff type, with six hearths each, using crude oil for fuel. From (59); deliver roasted ore to (61).

61. Swinging conveyor No. 2, 91 feet long and water-cooled. From (60); delivers to (62).

62. Swinging conveyor, No. 3, 50 feet long and water-cooled. From (61); delivers cool ore, via chute, to (63).

63. Sixteen-inch belt conveyor "T_1" having a conveying length of 150 feet and elevating the ore 17 feet. From (46) and (62); delivers, via chute, to (64).

64. Sixteen-inch belt conveyor "U_1" having a conveying length of 159 feet and elevating the ore 27 feet. From (63); delivers either to (65) or (79).

65. Sixteen-inch belt conveyor "Y." From (64); delivers to (66).

66. Storage bin, No. 15, having a capacity of 100 tons. From (47), (65), and (73); delivers, via automatic feeder, to (67).

67. One Wetherill type-VII magnetic separator. From (66); delivers con-

centrates to (50), middlings, which are made only when treating 0.5 to 1.5-millimeter material, via chute, to (68) and tailings to (51).

68. Sixteen-inch belt conveyor "V" having a conveying length of 87 feet and elevating the ore 6 feet. From (49) and (67); delivers to (69).

69. Sixteen-inch elevator "A" elevating the ore 81 feet. From (68) and (72); delivers, via chute, to (70).

70. Screen tower, No. 3, having screens with 0.75-millimeter holes. From (69); delivers oversize to (71) and undersize to (73).

71. Bin, No. 17, having a capacity of 100 tons. From (70); delivers, via two automatic feeders, to (72).

72. Two middlings re-crushing rolls, No. 4. From (71); deliver crushed ore to (69).

73. Sixteen-inch belt conveyor "W" having a conveying length of 37 feet and elevating the ore 10 feet. From (70); delivers either to (66) or (74).

74. Sixteen-inch belt conveyor "X." From (73); delivers to (75).

75. Storage bin, No. 14, having a capacity of 50 tons. From (74); delivers, via three automatic feeders, to (76).

76. Three Wetherill belt-type magnetic separators, Nos. 11, 12, and 13. From (75); deliver concentrates to (77) and tailings to (78).

77. Concentrates bin having a capacity of 50 tons. From (76) and (80); delivers, via tram cars and track scales, to (82).

78. Tailings bin having a capacity of 150 tons. From (76) and (80); delivers, via tram cars and track scales, to the tailings dump.

79. Storage bin, No. 13, having a capacity of 150 tons. From (64); delivers, via ten automatic feeders, to (80).

80. Ten Wetherill belt-type magnetic separators, Nos. 1 to 10. From (79); deliver concentrates to (77) and tailings to (78).

81. Relay bin having a capacity of 7 tons. From (7); delivers, via tram cars and track scales, to (82).

82. Five loading-station bins. From (50), (77), and (81); deliver, via rope-way, to smelter.

An auxiliary boiler is maintained in the roasting department for the atomization of oil to the roasters by means of steam. The oil is delivered from a large tank to which it is pumped. There is an exhaust fan for the fine-crushing department which discharges into a Cyclone dust-collector. Dust is taken from the collector and delivered, via tram cars, to a storage bin. There is also a dust collector near the bottom of the stack for the roasters and it delivers, via tram cars, to storage bins.

Power.

In the power station there are six 125 horse-power boilers, fed by two feed pumps, and delivering steam to three 250 horse-power engines which in turn drive three 185-kilowatt generators. Switchboards and stepdown transformers deliver current to the various motors as follows:

One	175	horse-power motor drives (19), (22), (25), (27), (29), (31), (34), and the exhaust fan.
"	130	" " " " (2), (3), (10), and (11).
"	100	" " " " (47), (49), (64), (65), (67), (68), (69), (72), (73), (74), (76), and (80).
"	50	" " " " (41), (43), (44), (45), (58), (60), (61), (62), and (63).
"	50	" " " " a 34-kilowatt direct-current generator to furnish exciting current for the magnetic separators.
"	33	horse-power motor drives (35), (36), (37), (39), (40), (52), (53), (54), (56), and (57).
"	25	" " " " the machinery in the forge and machine shop.
"	10	" " " " (4) and (6).
"	10	" " " " (8), (12), (13), (14), (16), and (17).
"	5	" " " " (21), (26), and (30).
10	588	

This plant is thoroughly equipped with offices, drafting rooms, laboratories,

and forge and machine shops. All tramming is performed by electric locomotives and cars.

All measurements as to capacity of bins, dimensions and elevations of conveyors, etc., were taken from blue-prints and may not be accurate, but are closely so. A peculiar feature of this mill lies in the fact that there is but one elevator.

§ 1501. MILL NO. 169. GIROUX CONSOLIDATED MINES COMPANY, ELY, NEVADA.[85] — This mill has a capacity of 800 tons per 24 hours. The ores consist of two classes.[183] The first class, and probably the principal ore of the future, is made up of the economic mineral chalcopyrite in a monzonite gangue. Considerable chalcocite and a little melaconite are also present in this class of ore, which will run about 60% in silica and an average of 3% in copper. While the first class is composed of sulphides obtained from the lower workings, the second class is made up of oxidized ores in a talcose-quartz gangue and averages about 18% in copper. Some ore running still higher in copper is also concentrated, but most of the ore running 18%, or better, in copper is sent direct to the smelter. Gold and silver are present in variable amounts and, together with the copper minerals, make up the economic values. The problem, therefore, is to save the copper, gold, and silver values. The mill was built by the Traylor Engineering Company.[12] Ore from the mine is delivered, via tram cars, to (1).

1. Square bin with a 30 × 40-inch ore gate in the bottom and a capacity of 1,500 tons. From the mine; delivers to (2).

2. Blake breaker with a 15 × 24-inch jaw opening, making 250 thrusts per minute. From (1); delivers crushed ore to (3).

3. Square bin with a 20 × 24-inch ore gate in the bottom and a capacity of 800 tons. From (2); delivers to (4).

4. Fourteen-inch plunger feeder. From (3) and (13); delivers to (5).

5. Steel chain elevator with 24-inch cast-iron buckets placed 18 inches apart. From (4); delivers to (6).

6. Square mill-bin with a 20 × 24-inch ore gate in the bottom and a capacity of 1,000 tons. From (5); delivers to (7).

7. Fourteen-inch plunger feeder. From (6); delivers to (8).

8. Trommel, 3.5 × 6 feet, making 25 revolutions per minute and having 0.25-inch round punched holes. From (7); delivers oversize to (9) and undersize to (10).

9. Traylor rolls, 14 × 42 inches, making 90 revolutions per minute. From (8); deliver crushed ore to (10).

10. Elevator with a rubber belt having 16-inch cast-iron buckets placed 18 inches apart. From (8) and (9); delivers to (11).

11. Sampler, 48 inches in diameter. From (10); delivers sample to (12) and reject to (13).

12. Coning floor. From (11); delivers sample to assayer and rejects to (13).

13. Two trommels, 42 × 104 inches, making 25 revolutions per minute and having two screening sections. The first screen is of wire cloth and has 4 meshes to the inch, the second is of wire cloth and has 20 meshes to the inch. From (11) and (12); deliver the material on 4 mesh to (4), material between 4 and 20 mesh to (14), and material through 20 mesh to (21).

14. Traylor quintiplex jigs with 2 × 4-foot screens having 4, 6, 8, and 12 meshes to the inch and a capacity of about 500 tons per 24 hours. From (13); deliver concentrates to (34) and tailings to (15).

15. Dewatering wheel. From (14); delivers sand to (16) and water to (25).

16. Rigid rolls, 14 × 42 inches, making 90 revolutions per minute. From (15); deliver crushed ore to (17).

17. Elevator with a rubber belt having 16-inch cast-iron buckets placed 18 inches apart. From (16); delivers to (18).

18. Four single-unit Centripact screens with 20 meshes to the inch. Run wet. From (17); deliver oversize to (19) and undersize to (21).

19. One 6-foot Chili mill with a screen having 20 meshes to the inch. From (18); delivers crushed ore to (20).

20. Two 4-inch centrifugal pumps. From (19); deliver to (21).

21. Six single-unit Centripact screens with 30 meshes to the inch. Run wet. From (13), (18), and (20); deliver oversize to (22) and undersize to (25).

22. Ninteeen Wilfley tables. From (21); deliver concentrates to (34), middlings to (33), and tailings to (23).

23. Two 4-spigot Traylor mechanical classifiers. From (22), (26), (28), and (33); deliver overflows to (29) and spigots, as tailings, to (24).

24. Tram cars. From (23); deliver to dump.

25. Two redwood settling-tanks, 16 feet long by 6 feet deep by 6 feet wide at the top and tapering to a point at the bottom. From (15) and (21); deliver spigots to (26) and overflows to (27).

26. Nineteen Wilfley tables. From (25); deliver concentrates to (34) and tailings to (23).

27. One redwood slimes-tank with details as in (25). From (25); delivers spigot to (28) and overflow to (29).

28. Six Frue vanners making 150 0.5-inch throws per minute. From (27); deliver concentrates to (34) and tailings to (23).

29. One redwood settling-tank with details as in (25). From (23) and (27); delivers spigot to (32) and overflow to (30).

30. One Triplex pump, 7 × 8 inches. From (29); delivers to (31).

31. Two redwood settling-tanks with details as in (25). From (30); deliver spigots to (32) and overflows to (35).

32. Slimes dump. From (29) and (31).

33. Four Wilfley tables. From (22); deliver concentrates to (34) and tailings to (23).

34. Concentrates bin. From (14), (22), (26), (28), and (33); delivers to smelter.

35. Mill-water feed tank, made of redwood and holding 100,000 gallons of water. From (31); delivers water to mill system.

The concentrates run about 22% in copper, 0.26 ounce in gold, and 2.25 ounces in silver per ton and represent a recovery of 86.7% of the values.

Labor and Wages.

The mill operates three 8-hour shifts per day and 7 days a week. The average wage is $3.75 per shift.

Power and Water.

One hundred and seventy-five horse-power is required to run the plant and this is developed by steam.

The water comes from the various mine shafts and 1,000 gallons are required per ton of ore milled. Of this amount 800 gallons are conserved for re-use.

§ 1502. MILL NO. 170. CONCENTRATOR OF THE STEPTOE VALLEY SMELTING AND MINING COMPANY, MCGILL, NEVADA.[192] — The mill has a total capacity of 4,000 tons per 24 hours and is divided into three units of two sections each.[44] The plant handles the ores from the Cumberland Ely Copper Company's mines

and from the mines of the Nevada Consolidated Copper Company in about equal proportions. The Cumberland Ely ore contains the minerals chalcocite, pyrite, chalcopyrite, melaconite, magnetite, and limonite as well as gold and silver values occurring in a quartz-porphyry gangue. This crude ore will assay about as follows: 3.49% in copper, 16% in iron, about 50 to 67% of which is in the form of pyrite and the remainder mostly as magnetite with a little limonite, 0.01 ounce of gold, and 0.2 ounce of silver per ton. The Nevada Consolidated ore is of a similar nature and occurrence, with the following exceptions: In the crude state it will assay 2.3% in copper and 4% in iron which is wholly in the form of pyrite, no magnetite or limonite being present.

The economic minerals, in each case, are evenly and finely disseminated throughout the gangue which necessitates fine crushing. The problem is to save the copper, gold, and silver values.

Each unit is composed of two similar sections. One section only will be described. The Cumberland Ely ores are screened at the mine while the Nevada Consolidated ores are screened at the concentrator. Ore from the mine goes to (1).

1. Shaking grizzly, 4 × 7 feet, with 2.125-inch spaces between the bars which have a slope of about 18.5° and make 60 throws per minute. From the mine; delivers oversize to (2) and undersize to (3).

2. Two No. 7.5 McCully gyratory breakers. From (1); deliver crushed ore to (3).

3. Eighteen-inch belt conveyor. From (1), (2), and (5); delivers, via automatic distributor, to (6).

4. Ore bin, 30.5 feet wide by 19.25 feet deep by 189 feet long. For ore from the Cumberland Ely Copper Company's mines. From the mine, in railroad cars; delivers, via cast-iron gates, into a mounted hopper which carries an electrically-driven Challenge feeder. The hopper and feeder travel the length of the bin and discharge onto (5).

5. Eighteen-inch Robins belt conveyor running at right angles to (3). From (4); delivers to (3).

6. Automatic sampler. From (3); delivers sample to assayer and rejects to (7).

7. Distributing bin, 11 feet wide by 10 feet deep by 32 feet long, common to two sections. From (6); delivers, via automatic Challenge feeder making 7 revolutions per minute, to (8).

8. Trommel, 42 × 84 inches, with 0.625-inch round holes and making 18 revolutions per minute. Driven by worm and wheel. From (7); delivers oversize to (9) and undersize to (10).

9. Allis-Chalmers style "A" rolls, 15 × 36 inches, making 81 revolutions per minute and using Midvale steel shells having a life of about 1 year. From (8); deliver crushed ore to (12).

10. Trommel, 42 × 72 inches, with 0.375-inch round holes and making 18 revolutions per minute. Driven by worm and wheel. From (8); delivers oversize to (11) and undersize to (12).

11. Allis-Chalmers style "B" rolls, 14 × 36 inches, making 98 revolutions per minute, and using Midvale steel shells having a life of about 1 year. From (10) and (13); deliver crushed ore to (12).

12. Two 20-inch elevators with 10-ply belts, speeds of 365 feet per minute, and malleable-iron buckets, 6 × 7 × 18 inches, set 20 inches apart. One is used and one held as a spare. From (9), (10), (11), (15), (17), (18), and (19); deliver to (13).

13. Trommel, 42 × 42 inches, divided into two sections with 0.1875-inch and 0.3125-inch openings respectively, and making 18 revolutions per minute.

Driven by worm and wheel. From (12); delivers material larger than 0.3125 inch to (11), 0.3125 to 0.1875-inch material to (15), and material through 0.1875 inch to (14).

14. Eight trommels, 3 × 6 feet, with 2-millimeter round holes and making 18 revolutions per minute. Driven by worm and wheel. From (13); deliver oversize to (19) and undersize to (20).

15. Three Traylor jigs with brass cloth sieves, 20 × 30 inches, of 5 mesh, 14 wire. The plungers make 170 strokes per minute. From (13); deliver discharges to (40); hutch products, if rich enough, to (40) but if not rich enough to (12); and tailings to (16).

16. Dewatering screen, 3 × 3 feet, with 2-millimeter round punched holes and making 18 revolutions per minute. From (15) and (19); delivers oversize to (17) and undersize to (18).

17. Allis-Chalmers style "B" rolls, 14 × 36 inches, making 114 revolutions per minute, and using Midvale steel shells having a life of about 1 year. From (16); deliver crushed ore to (12).

18. V-shaped settling tank, 3.5 feet wide by 4 feet deep by 7 feet long. From (16); delivers settlings to (12) and overflow to waste.

19. Nine Traylor jigs with brass cloth sieves of 8 mesh, 17 wire. From (14); deliver discharges to (40); hutch products, if rich enough, to (40) but if not rich enough to (12); and tailings to (16).

20. Eight 2-spigot Richards' vortex classifiers. From (14); deliver the first spigots to (21), second spigots to (22), and overflows to (26).

21. Nine No. 5 Wilfley tables making 240 thrusts per minute. From (20); deliver concentrates to (40), slimy headwaters to (23) or waste according to the ability of the tanks to settle the water, and tailings to (23) or waste.

22. Ten No. 5 Wilfley tables. From (20); deliver concentrates to (40), slimy headwaters to (23) or waste according to the ability of the tanks to settle the water, and tailings to (23) or waste.

23. Four 8-foot Callow tanks. From (21) and (22); deliver spigots to (24) and overflows to waste.

24. Four 6-foot Huntington mills crushing through slotted punched screens with 20 meshes to the inch and making 65 revolutions per minute. Only two or three of these mills are in use at one time. From (23) and (27); deliver pulp to (25).

25. Two 18-inch elevators with 8-ply belts having speeds of 375 feet per minute and malleable-iron buckets, 5 × 6 × 16 inches, set 2 feet apart. Only one used, one being held as a spare. From (24); deliver to (26).

26. Two dewatering tanks. From (20) and (25); deliver pulp to (27) and overflows to (28).

27. Five double Callow screens with 30 meshes to the inch. From (26); deliver oversize to (24) and undersize to (28).

28. Four 4-compartment Spitzkasten. From (26) and (27); deliver the first and second spigots to (29), third spigots to (30), fourth spigots to (31), and overflows to (32).

29. Eight No. 5 Wilfley tables. From (28); deliver concentrates to (40), slimy head waters to (35), and tailings to (33).

30. Four No. 5 Wilfley tables. From (28); deliver concentrates to (40), slimy head waters to (35), and tailings to (33).

31. Eight No. 5 Wilfley tables. From (28); deliver concentrates to (40), slimy headwaters to (35), and tailings to (33).

32. Ten 8-foot Callow tanks. From (28); deliver spigots to (34) and overflows to waste.

33. Eight 8-foot Callow tanks. From (29), (30), and (31); deliver spigots to (36) and overflows to waste.

34. Twenty No. 5 Wilfley tables. From (32); deliver concentrates to (40), slimy headwaters to (35), and middlings and tailings to (38).

35. Eight 8-foot Callow tanks. From (29), (30), (31), and (34); deliver spigots to (37) and overflows to waste.

36. Sixteen Allis-Chalmers 6-foot Frue vanners with corrugated belts. Make 190 throws per minute. From (33); deliver concentrates to (40) and tailings to waste.

37. Sixteen Allis-Chalmers 6-foot Frue vanners with smooth belts. Make 190 throws per minute. From (35); deliver concentrates to (40) and tailings to waste.

38. Eight 8-foot Callow tanks. From (34); deliver spigots to (39) and overflows to waste.

39. Sixteen Allis-Chalmers 6-foot Frue vanners with smooth belts. Make 190 throws per minute. From (38); deliver concentrates to (40) and tailings to waste.

40. Two steel concentrates-bins, 28 feet in diameter and 6 feet deep, with cocoa matting in the bottoms to act as filters. From (15), (19), (21), (22), (29), (30), (31), (34), (36), (37), and (39); deliver, via Blaisdell excavator, through centers into 10-ton hopper-bottomed steel cars which go to the smelter. The water goes to waste.

There are two tailings launders passing along the ends of the unit and each attached to the automatic sampler, so that different ores may be run in the unit at the same time. The automatic sampler delivers the sample to the assayer and rejects to waste.

§ 1503. MILL NO. 171. CONCENTRATOR NO. 6 OF THE ARIZONA COPPER COMPANY, LIMITED, MORENCI, ARIZONA.[154] — The capacity of this mill is about 700 tons per 24 hours.[35 128] The company has five other concentrators in operation, the capacity of each varying from 200 to 400 tons per 24 hours.[65] The economic mineral, chalcocite, is finely disseminated through a siliceous gangue. The ore runs about 3.25% in copper with slight values of gold and silver present. Some oxide and carbonate copper minerals are also present. The problem is to save the copper. The ore, loaded into cars at the mine, runs automatically on a trestle and is delivered to (1).

1. Four 250-ton cylindrical steel-bins, each 31.25 feet high by 15.83 feet in inside diameter. The circular steel shells rest on, and are anchored to, octagonal concrete foundations which also act as bottoms. From the mine cars; deliver, via hoppers, to (2).

2. One of two coarse-ore shaking feeders of the swinging type operated by a Wilfley motion and making 100 1.75-inch throws per minute. Has a slope of 3.75 inches to the foot. From (1); delivers to (3).

3. One of two Blake-type Farrell breakers with an 18 × 36-inch jaw opening making 250 thrusts per minute and breaking to three inches. From (2); delivers crushed ore to (4).

4. One of two bumping feeders of the suspended type operated by a revolving cam at 118 throws per minute. From (3); delivers to (5).

5. One of two Chalmers and Williams Cornish-type rolls, 16 × 42 inches, making 73 revolutions per minute and crushing to 1.25 inches. From (4); delivers crushed ore to (6).

6. One 18-inch horizontal Stephens-Adamson belt conveyor with a conveying length of 44 feet and a speed of 343 feet per minute. From (5); delivers to (7).

7. One 18-inch inclined Stephens-Adamson belt conveyor with a conveying

length of 315 feet, a slope of 25°, and a speed of 360 feet per minute. From (6); delivers to (8).

8. One of two 50-ton cylindrical steel-bins, each 18 feet high by 9.5 feet in diameter. Timber bottoms, with discharge openings, 24 × 30 inches. From (7); delivers to (9).

9. One of two fine-ore shaking feeders of the suspended type operated by a Wilfley motion and making 120 throws per minute. Has a slope of 3.25 inches to the foot. From (8); delivers to (10).

10. Two of three trommels, 4 × 9 feet, each divided into three sections. Two sections have 0.625-inch screens and one has a 1.25-inch screen. Have slopes of 4 inches in 17 feet and speeds of 36 revolutions per minute. From (9) and (14); deliver 0.625 to 0-inch material to (11), 1.25 to 0.625-inch material to (12), and the oversize to (13).

11. One of two 5-compartment Hancock jigs. The first 2.67 compartments have 0.25-inch punched-plate screens and the last 2.33 compartments have 0.5-inch punched-plate screens with three or four 0.625-inch holes in each, 4 × 9-inch pocket in the last of the third compartment and the first of the fourth. The plungers make 175 strokes per minute and the driving shaft makes 58.33 revolutions per minute. From (10); delivers concentrates to (30), middlings to (14), tailings to (15), and overflow to (31).

12. One of two double-compartment Harz jigs with 0.1875-inch punched-plate screens. The plungers, 2 × 2.75 feet, make 2.125-inch strokes and the eccentric shaft makes 137 revolutions per minute. From (10); delivers concentrates to (30) and tailings to (15).

13. One of two rolls crushing to 0.75 inch and with other details as in (5). From (10); deliver crushed ore to (14).

14. One of two vertical elevators having a belt speed of 358 feet per minute, and buckets, 7 × 14 inches, spaced 21 inches apart, which elevate the ore 38.5 feet. The pulleys are 14 × 36 inches. From (11) and (13); delivers to (10).

15. Three of four special heavy-pattern 6-foot Huntington mills made by Chalmers and Williams. Crush through 5-millimeter screens and make 60 revolutions per minute. The mills are geared three to one and fitted with 12.5 × 32-inch pulleys. Each mill has a capacity of 250 tons per 24 hours. From (11) and (12); deliver pulp to (16).

16. One of two 2-stage inclined elevators, having belt speeds of 377 feet per minute, slopes of 1.5 inches to the foot, and buckets, 9 × 24 inches, spaced 21 inches apart, which elevate the ore 36 and 30 feet or a total of 66 feet. The pulleys are 24 × 36 inches. From (15) and (17); delivers to (17).

17. One of two 5-compartment Hancock jigs. The first 2.67 compartments have 0.1875-inch punched-plate screens and the last 2.33 compartments have 0.25-inch punched-plate screens. The plungers make 175 strokes per minute. From (16); delivers concentrates to (30), middlings to (16), tailings to (18), and overflow to (31).

18. Two of three Huntington mills crushing to 1.5 millimeters and with other details as in (15). From (17); deliver pulp to (19).

19. One of two 5-compartment Hancock jigs. The first 2.67 compartments have 8-mesh copper-wire screens, and the last 2.33 compartments have 3.5-millimeter punched-plate screens. The plungers make 183 strokes per minute. From (18) and (20); delivers concentrates to (30), middlings to (20), tailings to (21), and overflow to (31).

20. One elevator having buckets, 6 × 10 inches, which elevate the ore about 18 feet. Twenty-four inch pulleys are used. From (19); delivers to (19).

21. Cone separator. From (19); delivers coarser material to (23) and finer material to (22).

22. One of two vertical elevators having a belt speed of 358 feet per minute and buckets, 9 × 24 inches, spaced 21 inches apart, which elevate the ore 21.5 feet. The pulleys are 24 × 36 inches. From (21) and (24); delivers to (25).

23. One of two vertical elevators having buckets, 7 × 14 inches, spaced 21 inches apart, which elevate the ore about 14 feet. From (21); delivers to (24).

24. Two Huntington mills crushing through 1-millimeter screens and having other details as in (15). From (23); deliver pulp to (22).

25. Two 4-compartment hydraulic classifiers. From (22); deliver the first spigots to (26), the second spigots to (27), the third spigots to (28), the fourth spigots to (29), and no overflows.

26. Eleven No. 5 Wilfley tables making 249 strokes per minute. From (25); deliver concentrates to (30) and tailings to (31).

27. Eleven 6-foot Frue vanners with corrugated belts making 200 throws per minute. From (25); deliver concentrates to (30) and tailings to (31).

28. Eleven 6-foot Frue vanners with smooth belts making 196 throws per minute. From (25); deliver concentrates to (30) and tailings to (31).

29. Seventeen 6-foot Frue vanners with smooth belts making 200 throws per minute. From (25); deliver concentrates to (30) and tailings to (31).

30. Three of six 100-ton settling bins. From (11), (12), (17), (19), (26), (27), (28), and (29); deliver drained concentrates, via cars, to smelter and water to (34).

31. Automatic samplers. From (11), (17), (19), (26), (27), (28), and (29); deliver samples to assayer and rejects to (32).

32. Classifiers. From (31); deliver coarser material to (35) and finer material to (33).

33. Twenty-four reinforced-concrete tanks, each 16 feet deep by 9.5 feet in inside diameter with conical bottoms sloping at 53°. From (32); deliver clear water overflows to (34) and the thickened pulp to (35).

34. Pump. From (30), (33), (35), and (36); delivers to mill service tank.

35. Settling reservoir, 11 feet deep by 130 feet in diameter, divided into four compartments each capable of holding 4,000 tons. Each compartment has a draining system and a filter bottom through which the remaining water is removed. A revolving cantilever crane, in the center of the reservoir, with a 2.5-ton clam-shell bucket, removes the drained tailings. From (32) and (33); delivers drained tailings to (36) and water to (34).

36. Two 150-ton bins, with filter bottoms, located at the foot of a two-track incline of 35°. From (35); deliver tailings, via mine cars, to the mine for filling and the water to (34).

The average saving for the 6 months ending March 31, 1908, was 78%.

The ore is treated successively by three Hancock jigs and sampling, extending over a period of about 2 months, gave the following average results:

Number	(11)	Hancock	jig,	coarse feed	3.54	percent	copper
"	"	"	"	" tailings	1.88	"	"
"	(17)	"	"	medium feed	2.13	"	"
"	"	"	"	" tailings	1.58	"	"
"	(19)	"	"	fine feed	1.64	"	"
"	"	"	"	" tailings	1.43	"	"

In each case the feed sample is enriched by the addition of the middlings product which is returned to the jig. During this time the mill showed an extraction of 76% of the total copper and, of this, 54% was taken out by the jig system which includes 3 Hancock jigs and the Harz jig. Allowing 7% for the Harz jig (12), this gives the extraction by the 3 Hancock jigs alone as 47% of the total copper in the ore, or 62% of the copper extracted. This 47% extraction was made up by the three jigs as follows:

Number (11) or coarse Hancock	29.0	percent
" (17) or middle "	13.0	"
" (19) or fine "	5.0	"
Total	47.0	"

Labor.

The mill runs every day in the year excepting Christmas and July fourth, and regularly employs a total of 92 men per 24 hours on three 8-hour shifts. Both American and Mexican labor is employed per 24 hours as follows: 1 foreman, 2 shift bosses, 1 timekeeper, 2 weighers, 10 rock-house men, 2 rock-house ore pickers, 8 Huntington millmen, 12 vanner and tablemen, 9 men on the tanks and pumps, 4 oilers, 4 engineers, 6 firemen and helpers, 3 trommel men, 9 jig men, 4 men at the concentrates bins, 7 swampers and roustabouts, and 8 repair men.

Power.

There are three 250 horse-power Stirling boilers, set in a steel house. The main engine room is in the mill building itself and contains a 250 horse-power Nordberg cross-compound engine, 12 × 24 × 36 inches, which drives the Hancock jigs, Huntington mills, elevators, and re-crushing rolls. The electrical machinery is driven by another Nordberg engine running at 125 revolutions per minute and direct connected to a General Electric Company, 240-kilowatt, 3-phase, 25-cycle, 440-volt generator which operates the various motors. The lights and crane (which is used in the daytime only) are operated by a high-speed Ball engine direct connected to a 75-kilowatt, 2-phase, 60-cycle, 220-volt generator. Nernst lamps are used throughout the mill.

§ 1504. MILL NO. 172. DETROIT COPPER MINING COMPANY OF ARIZONA, MORENCI, ARIZONA.[154] — The capacity of this plant is 1,100 tons in 24 hours.[129] The economic minerals are the sulphides of copper, chiefly chalcocite. The gangue is highly siliceous and carries 40% alumina, which necessitates careful handling during concentration. The average copper content of the milling ore is from 3 to 3.5%. The problem is to save the copper. Table 550 gives analyses of such of the ores and products as are shipped to the smelter.

Crusher Plant.

The crusher plant has a capacity of 135 tons of ore per hour. It serves the whole mill and operates one shift only per 24 hours. The ore comes from the mine in cars and is dumped to (1).

1. Coarse-ore storage bins. From mine cars; deliver, via mechanical feeder, to (2).

2. Belt conveyor. From (1); delivers to (3).

3. Grizzly with 2.25-inch spaces between the bars. From (2); delivers oversize to (4) and undersize to (9).

4. No. 7½ Gates breaker, breaking through a 3.5-inch ring. From (3); delivers crushed ore to (5).

5. Trommel with 2.25-inch round holes. From (4); delivers oversize to (6) and undersize to (9).

6. Picking belt. From (5); delivers all ore above 8% in copper to (7) and residue to (8).

7. Bin for smelting ore. From (6); delivers, via cars, to smelter.

8. Four Blake breakers, two having 10 × 20 and two having 12 × 20-inch jaw openings. Breaking through a 2.25-inch ring. From (6); deliver crushed ore to (9).

9. Main delivery belt. From (3), (5), and (8); delivers to (10).

Sampling Plant.

The sampling plant has a capacity of 100 tons per hour. It serves the whole mill and operates one shift only per 24 hours.

10. Automatic sampler. From (9); delivers sample to (11) and reject to (22).
11. Mixing drum. From (10); delivers to (12).
12. Vezin sampler. From (11); delivers sample to (13) and rejected ore to (21).
13. Mixer. From (12); delivers to (14).
14. Vezin sampler. From (13); delivers sample to (15) and rejected ore to (21).
15. Rolls. From (14); deliver crushed sample to (16).
16. Vezin sampler. From (15); delivers sample to (17) and rejected ore to (21).
17. Rolls. From (16); deliver crushed sample to (18).
18. Vezin sampler. From (17); delivers sample to (19) and rejected ore to (21).
19. Sample pocket. From (18); delivers to (20).
20. Sample grinder. From (19); delivers crushed sample to assay office.
21. Elevator. From (12), (14), (16), and (18); delivers to (22).

Concentration Plant.

This is divided into two sections, both alike, each of 550 tons capacity per 24 hours. Only one of these sections is described below.

22. Richardson's automatic weighing scales. From (10) and (21); deliver to (23).
23. Mill storage bins. From (22); deliver to (24).
24. Plunger feeder. From (23); delivers to (25).
25. Trommel with 1-inch round holes. From (24); delivers oversize to (26) and undersize to (27).
26. Roughing rolls, 16 × 40 inches. From (25); deliver crushed ore to (27).
27. Elevator. From (25), (26), (31), and (35); delivers to (28).
28. Trommel with 0.625-inch round holes. From (27); delivers oversize to (29) and undersize to (32).
29. Two 1-compartment jigs with two jigs held in reserve. From (28); deliver concentrates to (71) and tailings to (30).
30. Dewatering shaking screen. From (29); delivers ore to (31) and water to (59).
31. Re-grinding rolls, 16 × 40 inches. From (30); deliver crushed ore to (27).
32. Trommel with 0.5-inch round holes. From (28); delivers oversize to (33) and undersize to (36).
33. Two 2-compartment jigs with two jigs held in reserve. From (32), fed with 0.625 to 0.5-inch stuff; deliver concentrates to (71) and tailings to (34).
34. Dewatering shaking launder. From (33) and (37); delivers ore to (35) and water to (59).
35. Re-grinding rolls, 16 × 40 inches. From (34); deliver crushed ore to (27).
36. Trommel with 7-millimeter holes. From (32); delivers oversize to (37) and undersize to (38).
37. Three 2-compartment jigs with one jig held in reserve. From (36), fed with 12.7 to 7-millimeter stuff; deliver concentrates to (71) and tailings to (34).

38. Trommel with 5-millimeter holes. From (36); delivers oversize to (39) and undersize to (41).

39. Three 3-compartment jigs. From (38), fed with 7 to 5-millimeter stuff; deliver concentrates to (71) and tailings to (40).

40. Distributing launder. From (39), (42), and (44); delivers to (45), (46), (47), and (48).

41. Trommel with 2.5-millimeter holes. From (38); delivers oversize to (42) and undersize to (43).

42. Four 3-compartment jigs. From (41); deliver concentrates to (71) and tailings to (40).

43. Hydraulic classifier. From (41); delivers the first spigot to (44); second, third, fourth, and fifth spigots to (49); and overflow to (54).

44. Four 3-compartment jigs. From (43); deliver concentrates to (71) and tailings to (40).

45. Chili-mill tank, No. 1. From (40); delivers spigot to (50) and overflow to (59).

46. Chili-mill tank, No. 2. From (40) and (58); delivers spigot to (51) and overflow to (59).

47. Chili-mill tank, No. 3. From (40) and (58); delivers spigot to (52) and overflow to (59).

48. Chili-mill tank, No. 4. From (40); delivers spigot to (53) and overflow to (59).

49. Four Wilfley tables. From (43); deliver concentrates to (71); tailings to (51), (52), and (53); and backwater to (59).

50. Chili mill, No. 1, crushing through a 2.5-millimeter screen. From (45); delivers pulp to (56).

51. Chili mill, No. 2, crushing through a 1.5-millimeter screen. From (46) and (49); delivers pulp to (56).

52. Chili mill, No. 3, crushing through a 1.5-millimeter screen. From (47) and (49); delivers pulp to (56).

53. Chili mill, No. 4, crushing through a 1.5-millimeter screen. From (48) and (49); delivers pulp to (56).

54. Four settling tanks. From (43); deliver spigots to (55) and overflows, clear water, to (60).

55. Four Wilfley tables. From (54); deliver concentrates to (71), tailings to (56), and backwater to (59).

56. Hydraulic classifiers. From (50), (51), (52), (53), and (55); delivers nine spigots to (57) and overflow to (61).

57. Eleven Wilfley tables. From (56); deliver concentrates to (71), middlings and backwater to (58), and tailings, via automatic sampler, to (65).

58. Elevator. From (57); delivers to (46) and (47).

59. Slimes-settling tanks. From (30), (34), (45), (46), (47), (48), (49), and (55); deliver spigots to (61) and overflows, clear water, to (60).

60. Pump. From (54) and (59); delivers clear water to head of mill.

61. V-box classifier. From (56) and (59); delivers spigots to (62) and overflow to (63).

62. Twenty Frue vanners. From (61); deliver concentrates to (71) and tailings, via automatic sampler, to (65).

63. Settling tanks. From (61); deliver spigots to (64) and overflows, clear water, to (70).

64. Twenty Frue vanners. From (63); deliver concentrates to (71) and tailings, via automatic sampler, to (65).

65. Automatic sampler. From (57), (62), and (64); delivers rejected tailings to (66) and sample to assayer.

66. Conical tanks. From (65); deliver coarse tailings to (67) and overflows to (68).

67. Impounding dam. From (66).

68. Slimes-settling tanks. From (66); deliver thickened slimes to (69) and overflows, clear water, to (70).

69. Impounding reservoir. From (68); delivers slimes to waste and clear water to (70).

70. Pumps. From (63), (68), (69), and (71); deliver to head of mill.

71. Concentrates bins. From (29), (33), (37), (39), (42), (44), (49), (55), (57), (62), and (64); deliver overflows to (70) and concentrates, via cars, to smelter.

TABLE 550. — ANALYSES OF SHIPPING PRODUCTS FROM DETROIT COPPER COMPANY'S MINES.

Percent.	Sorted Sulphides.	Screening from Concentrated Ore.		Smelting Sulphides.	Slimes from Concentrator.	Fine Concentrates.	Manganese Blue Mine Carbonate Ores.	Montezuma Mine Oxide Ores.
SiO_2	24.5	45.0	49.8	34.5	66.9	26.0	44.6	34.3
Fe	20.9	16.5	9.6	16.4	1.4	23.7	13.2	12.4
Al_2O_3	10.6	10.0	20.1	21.2	24.5	6.2	17.7	15.7
CaO	Trace	0.5	0.3	0.5	4.3	Trace	5.5	8.2
MgO	Trace	0.2	0.5	Trace	.....	Trace	3.1	3.3
Cu	19.9	7.7	7.0	5.8	2.1	16.0	5.7	7.7
S	23.8	17.7	11.0	19.5	.....	25.0	.....	.....

The concentrator has a floor area of 166 × 240 feet. About 1,800 gallons of water are in constant use. The sampling mill, above the concentrator, is connected to the ore bin by a 400-foot conveyor belt. Both the concentrator and sampler are run entirely by electricity, furnished by four 150 horse-power gas engines.

Experiments in 1904, on oil concentration, were not successful as regards this process.

The automatic samplers used after (57), (62), (64), and in (65), consist of a vertical metallic slot which cuts the tailings stream. These slots are all mounted on the same moving carriage, therefore move across the stream at the same rate. They are also of uniform width, therefore the weights of the samples give the relative weights of the materials treated on (57), (62), and (64). The three latter samples when combined in proportion to the relative weights should check the sample from (65).

Power.

Gas power is used extensively throughout the mine, mill, and smelter, except for hoists and locomotives. A Loomis generator with capacity to supply gas for 1,000 horse-power consumes New Mexico soft coal, using 1.5 to 1.75 pounds of coal to develop 1 horse-power hour. This gives a saving of 30% in fuel expense. The power house, 64 × 200 feet, is of steel and has concrete foundations. It contains Crossley gas engines which develop 1,920 horse-power. Two 100 horse-power engines drive the blowers for the furnaces, connected by a 300-foot blast main. One reserve engine is kept. Two 200 horse-power engines furnish electric power at 250 volts. This is stepped up to 2,500 volts at the power house and then carried to the mine, where it is stepped down to 250 volts. A 500 horse-power engine drives the compressor that furnishes blast, at 8 ounces, to the converter.

Water.

The mill at Morenci is absolutely without water, except what is pumped from the wells on the San Francisco River, a distance of 6 miles. It is necessary to raise the water 1,500 feet.

The average monthly consumption for 1906 for the concentrators (exclusive of water for power) was	5,418,954	gallons.
The water for power, smelting, converting, mining, and hauling of ore, was	3,587,075	"
Used for domestic purposes in camp	5,291,741	"
Total consumption per month	14,297,770	"
Average consumption of water per ton of ore in milling	250	"
Average consumption of water per month per inhabitant for domestic use	880	"
Total tons milled in 10 months	217,081	tons.
Furnace burden, average	14,500	"
Population of town	6,000	

§ 1505. MILL NO. 173. THE CANANEA CONSOLIDATED COPPER COMPANY, CONCENTRATOR NO. 2, CANANÉA, SONORA, MEXICO.[68] [69]—This mill has a capacity of about 2,000 tons per 24 hours and is divided into four 700-ton sections.[40] [50] The plant was designed by L. D. Ricketts [154] and cost, erected, about $250,000. It is of the hillside type and terraced throughout, has concrete foundations laid on a rock base, steel framework and iron sides and roof. All the floors are wooden and rest on foundations which are independent of those on which the machines rest. It is located between the mines and the smelters.

The company owns 10,412 acres of land all located in the State of Sonora, Mexico, about 20 miles south of the Arizona border.[170] It also owns the town site of La Cananea and franchises for electric lighting, water works, ice plants, traction system, telephone service, etc., and is thoroughly and modernly equipped with all necessities and many luxuries. Railroads, hospitals, bakeries, sawmills, clubs, stores, houses, and numerous other things of a similar nature are owned or controlled by the company.

The ore deposits occur in shear zones between altered limestone and porphyry dikes and as replacements in the latter. All known oxide, carbonate, and sulphide minerals of copper occur and also considerable native copper which is auriferous and argentiferous.

The siliceous ore bodies are concentrated to eliminate the gangue which is of talc and occasional massive quartz carrying large quantities of native copper, a little massive chalcocite, and a small amount of pyrite. The important mineral to recover is the soft chalcocite found in the talc. Zinc and other refractory minerals do not occur. The combined capacity of the concentrators and smelters is about 4,000 tons daily and the ore handled in 1905 averaged 3.84% in copper besides the gold and silver values. Everything is performed automatically and about 3.6 tons are put into one.

The problem is to save the copper, gold, and silver.

The ore comes from the mines, via narrow gauge railroad, and is delivered to (1).

1. Eight coarse-ore bins of 2,000 tons total capacity. From the mines; deliver to (2).

2. One 30-inch belt conveyor. From (1); delivers to (3).

3. Two grizzlies with 1-inch spaces between the bars. From (2); deliver oversize to (4) and undersize to (10).

4. One 36-inch belt conveyor. Four men pick ore and waste from this belt. From (3); delivers hand-picked chalcocite and native copper, via cars, bin, and narrow gauge railroad, to smelter; clay, via cars, to waste; and milling ore to (5).

5. Five breaker ore-bins. From (4); deliver to (6).

6. Five automatic feeders. From (5); deliver to (7).

7. Five Blake breakers with 10 × 20-inch jaw openings. From (6); deliver crushed ore to (8).

8. Five rolls, 15 × 36 inches, crushing through a 1-inch ring. From (7); deliver crushed ore to (9).

9. One 18-inch belt conveyor. From (8); delivers to (10).

10. One 18-inch belt conveyor. From (3) and (9); delivers to (11).

Serving Two Sections.

11. Six steel crushed-ore storage bins having a combined capacity of 6,400 cubic feet or 2,800 tons. From (10); deliver ore crushed to pass a 1-inch ring, via six automatic pan feeders, to (12).

12. One 16-inch Robins belt conveyor of 3 × 6-ply conveyor belting with a conveying length of 225 feet, a speed of 235 feet per minute, an inclination of 18°, and a life of about 3 years. Handles 1,400 tons per 24 hours and requires 10 horse-power. From (11); delivers to (13).

13. One 16-inch Robins belt conveyor of 3 × 6-ply conveyor belting with a conveying length of 187.5 feet, a speed of 235 feet per minute, an inclination of 18°, and a life of about 3 years. Handles 1,400 tons per 24 hours and requires 11 horse-power. From (12) and (17); delivers to (14).

14. Automatic sampler. From (13); delivers sample, which is cut down in the usual manner to a size suitable for assay, to sample room and residual ore to (15) and (16).

15. One 16-inch Robins belt conveyor of 3 × 6-ply conveyor belting with a conveying length of 57.5 feet, a speed of 216 feet per minute, an inclination of 10.5°, and a life of about 3 years. Handles 700 tons per 24 hours and requires 3 horse-power. One belt for each section of the mill. From (14); delivers, via distributor, to (18).

16. One 400-ton emergency storage bin or "Overflow bin." Conveyors (13), (15), and (17) are on an independent motor, so that when short of ore in (11), or when having trouble with (12), or whenever it becomes necessary to use same, ore is taken from (16) and delivered, by means of (17), to (13). From (14); delivers to (17).

17. One Robins belt conveyor of 3 × 6-ply conveyor belting with a conveying length of 81.5 feet, a speed of 235 feet per minute, and an inclination of 18°. Runs intermittently. From (16); delivers to (13).

Concentrator in Four Sections.

(Only Section "D" is Described. All Tonnages Given are Dry Weights.)

18. Two trommels, 4 × 5 feet, making 16 revolutions per minute and having 0.625-inch round holes punched 1 inch between centers in 0.3125-inch steel without a margin, and inclinations of 0.75 inch to the foot. Each is made up of two sections of two pieces each, 30 × 76 inches, rolled lengthwise to 4 feet in diameter. The four pieces weigh, when new, 510 pounds and have an average life of 70 days; 0.021 pound of the screen steel is consumed per ton of ore handled, and the trommels together handle 700 tons per 24 hours besides 108 gallons of wash water per minute. From (15) and water from (41); deliver 168 tons of oversize per 24 hours to (24) and 532 tons of undersize per 24 hours to (19).

19. Two trommels, 4 × 5.33 feet, making 16 revolutions per minute and having 0.375-inch round holes punched 0.75 inch between centers in 0.25-inch steel without a margin and inclinations of 0.75 inch to the foot. Each is made up of two sections of two pieces each, 32 × 76 inches, rolled lengthwise to 4 feet in diameter. The four pieces weigh, when new, 488 pounds and have an average life of 40 days; 0.028 pound of the screen steel is consumed per ton of ore

handled and the trommels together handle 864 tons per 24 hours besides 52 gallons of wash water per minute. From (18), (22), (23), and water from (41); deliver 187 tons of oversize per 24 hours to (25) and 677 tons of undersize per 24 hours to (20).

20. Two trommels, 4 × 5.33 feet, making 16 revolutions per minute and having 0.1875-inch round holes punched 0.375 inch between centers in No. 10 steel with a 1-inch margin on the sides, and inclinations of 0.75 inch to the foot. Each is made up of two sections of two pieces each, 32 × 76 inches, rolled lengthwise to 4 feet in diameter. The four pieces weigh, when new, 280 pounds and have an average life of 30 days; 0.027 pound of screen steel is consumed per ton of ore handled and the trommels together handle 677 tons per 24 hours besides 32 gallons of wash water per minute. From (19) and water from (41); deliver 115 tons of oversize per 24 hours to (32) and 562 tons of undersize per 24 hours to (21).

21. Four trommels, 4 × 5 feet, making 16 revolutions per minute and having 2-millimeter round holes punched 0.3125 inch between centers in No. 16 steel with a 1-inch margin on the sides, and inclinations of 0.75 inch to the foot. Each is made up of three sections of two pieces each, 32 × 76 inches, rolled lengthwise to 4 feet in diameter. The six pieces weigh, when new, 198 pounds and have an average life of 12 days; 0.030 pound of screen steel is consumed per ton of ore handled and the trommels together handle 562 tons per 24 hours besides 60 gallons of wash water per minute. From (20) and water from (41); deliver 126 tons of oversize per 24 hours to (38) and 436 tons of undersize per 24 hours to (33).

22. One 18-inch elevator with 13-ply friction belting having a speed of 460 feet per minute, a life of 20 months, and 50 buckets, 8 × 16 inches, which elevate 162 tons of ore per 24 hours, with no addition of water, 52 feet, and have a life of 3 months. Three hundred and twenty 0.375 × 1.5-inch elevator bolts, having a life of 3 months, are used. The head pulley is 4 feet in diameter and makes 40 revolutions per minute. From (24), (26), and (30); delivers to (19).

23. One 18-inch elevator with details as in (22). Handles 170 tons of ore per 24 hours, with no addition of water. From (25), (27), and (31); delivers to (19).

24. Two 1-compartment Harz coarse jigs with sieves, 24 × 40 inches, of 4-mesh, 12-wire brass cloth, each piece having a life of 80 days and a weight of 21 pounds. The plungers, 21 × 40 inches, make 115 2.5-inch throws per minute and the beds are 8 inches deep. Two horse-power is required to operate each jig which handles 168 tons per 24 hours besides 96 gallons of wash water per minute. One jig is used and one held as a reserve. From (18) and water from (41), fed with 1 to 0.625-inch material; deliver 6 tons of concentrates per 24 hours, via side gate discharges, to (60), 12 tons of hutch products per 24 hours to (22), and 150 tons of tailings per 24 hours to (28).

25. Two 1-compartment Harz fine jigs with details as in (24), except that the plungers make 130 throws per minute and each jig handles 187 tons per 24 hours besides 65 gallons of wash water per minute. One jig is used and one held as a reserve. From (19) and water from (41), fed with 0.625 to 0.375-inch material; deliver 17 tons of concentrates per 24 hours, via side gate discharges, to (60), 10 tons of hutch products per 24 hours to (23), and 160 tons of tailings per 24 hours to (29).

26. One set of Allis-Chalmers, class "B" rolls, 16 × 36 inches, crushing 148 tons of ore per 24 hours to 0.5 inch and requiring 45 gallons of wash water per minute and 11 horse-power to operate. The Midvale steel shells weigh, when new, 2,860 pounds and have a life of 150 days; 0.105 pound of shell steel is

consumed per ton of ore handled. From (28) and water from (41); deliver crushed ore to (22).

27. One set of Allis-Chalmers, class "B" rolls, 16 × 36 inches, crushing 158 tons of ore per 24 hours to 0.25 inch. Other details as in (26). From (29) and water from (41); deliver crushed ore to (23).

28. One 2-foot brass shovel dewatering wheel, weighing 113 pounds and lasting 3 years. Has 12 shovels made of 0.25-inch scrap-steel plate having a life of 40 days. Handles 150 tons per 24 hours. From (24); delivers 148 tons of ore per 24 hours to (26) and 2 tons of slimes per 24 hours to (30).

29. One 2-foot brass shovel dewatering wheel with details as in (28), except that this wheel handles 160 tons per 24 hours. From (25); delivers 158 tons of ore per 24 hours to (27) and 2 tons of slimes per 24 hours to (31).

30. Shovel-wheel Spitzkasten. From (28); delivers 2 tons of ore through the spigot per 24 hours to (22) and the overflow to (38) as wash water.

31. Shovel-wheel Spitzkasten. From (29); delivers 2 tons of ore through the spigot per 24 hours to (23) and the overflow to (38) as wash water.

32. One double 2-compartment Harz jig with sieves, 23.5 × 35.5 inches, of 4-mesh, 12-wire brass cloth, each piece having a life of 80 days and a weight of 18 pounds. The plungers, 21 × 40 inches, make 165 1-inch throws per minute and the beds are 4 inches deep. Requires 1 horse-power to operate and handles 115 tons per 24 hours. From (20) and water from (41), fed with 0.375 to 0.1875-inch material; delivers 10 tons of concentrates per 24 hours, via side gate discharges, to (60); 12 tons of hutch products per 24 hours, as concentrates, to (60); and 93 tons of tailings per 24 hours to (44).

33. Two double 3-compartment hydraulic classifiers of the "Richards-Coggin" type, handling 436 tons per 24 hours with an addition of 150 gallons of hydraulic water per minute. From (21); deliver 155 tons per 24 hours through the first and second spigots to (42), 100 tons per 24 hours through the third spigots to (43), and 181 tons per 24 hours in the overflows to (34).

34. One 4-compartment Spitzkasten handling 181 tons per 24 hours. From (33); delivers 55 tons per 24 hours through the spigots to (47) or (53) and 126 tons per 24 hours in the overflow to (35).

35. Two pulp thickeners, 10 feet in diameter by 12 feet deep, handling 126 tons per 24 hours. From (34); deliver 21 tons per 24 hours through the spigots to (59) and 105 tons per 24 hours in the overflows to (36).

The Spitzkasten system (36) and (37) has 9,900 cubic feet, capable of handling 450 gallons of slimes per minute. There are 33 compartments having a total surface area of 2,170 square feet of water. With a feed of 450 gallons of slimes per minute, the following division is made:

250 gallons of pulp per minute
200 " clear water per minute

In other words, this represents 22 cubic feet per gallon of slimes handled per minute and 10.85 square feet of surface area per gallon of clear water per minute.

36. Upper section of Spitzkasten system handling 105 tons per 24 hours. From (35); delivers 105 tons per 24 hours at a thicker consistency, through spigots, to (37) and 115 gallons of clear water per minute, as overflows, to (54), (56), (57), and (59).

37. Lower section of Spitzkasten system handling 105 tons per 24 hours. From (36); delivers 105 tons per 24 hours at a thicker consistency, through spigots, to (59) and 25 gallons of clear water per minute, as overflows, to (54), (56), (57), and (59).

38. Three double 2-compartment Harz jigs with sieves, 23.5 × 35.5 inches, of 5-mesh, 14-wire brass cloth, each piece having a life of 50 days and a weight

of 14 pounds. The plungers, 21 × 35 inches, make 170 1-inch throws per minute and the beds are 4 inches deep. Each jig requires 1 horse-power to operate it and together they handle 126 tons per 24 hours. From (21) and wash water from (30) and (31), fed with 0.1875-inch to 2-millimeter material; deliver 10 tons of concentrates per 24 hours, via side gate discharges, to (60); 24 tons of hutch products per 24 hours, as concentrates, to (60); and 92 tons of tailings per 24 hours to (44).

39. Spitzkasten handling 50 tons per 24 hours. From (45); delivers 50 tons per 24 hours at a thicker consistency, through spigot, to (47) or (53) and 300 gallons of clear water per minute, as overflow, to (40).

40. One 6-inch centrifugal pump handling 300 gallons of clear water per minute. From (39); delivers to (41).

41. Water box or supply tank. From (40); delivers wash water, via 6-inch centrifugal pump, to (18), (19), (20), (21), (24), (25), (26), (27), and (32).

42. Two double 3-compartment Harz jigs with sieves, 23.5 × 35.5 inches, of brass cloth. The first compartments have 6 mesh, 16 wire, each piece having a life of 30 days and a weight of 10 pounds. The last 2 compartments have 8 mesh, 18 wire, each piece having a life of 25 days and a weight of 7 pounds. The plungers, 21 × 35 inches, make 200 0.5625-inch throws per minute and the beds are 4 inches deep. Each requires 1 horse-power to operate and together they handle 155 tons per 24 hours. From (33), each jig handling the product of one set of spigots; deliver 50 tons of hutch products per 24 hours, as concentrates, to (60) and 105 tons of tailings per 24 hours to (44).

43. Two double 3-compartment Harz jigs with all details as in (42). (42) and (43) together use 84 gallons of wash water per minute. (43) handles 100 tons per 24 hours. From (33); deliver 30 tons of hutch products per 24 hours, as concentrates, to (60) and 70 tons of tailings per 24 hours to (44).

44. Four 2-foot brass shovel dewatering wheels, with details as in (28), handling 360 tons per 24 hours. From (32), (38), (42), and (43); deliver 310 tons of ore per 24 hours, via distributor, to (46) and 50 tons in slimes per 24 hours, as overflows, to (45).

45. One chip catcher which is composed of 40 square feet of 8-mesh, 16-wire brass cloth. Handles 50 tons per 24 hours. From (44); delivers all chips and floating matter, as oversize, to waste and 50 tons of slimes per 24 hours, as undersize, to (39).

46. Four 5-foot Bryan mills making 39 revolutions per minute. Each requires 18 horse-power to operate and together they crush 335 tons per 24 hours through a 1.5-millimeter screen. Each die weighs, when new, 1,664 pounds and has a life of 120 days. Each tire weighs, when new, 3,672 pounds and has a life of 240 days. Five screens weigh, when new, 19 pounds and have a life of 7 days. For each ton of ore treated 0.1655 pound of die steel, 0.1328 pound of tire steel, and 0.0032 pound of screen steel, or a total of 0.3015 pound of steel is consumed. From (44) and (55); deliver 335 tons per 24 hours, as pulp, to (47).

47. Four dewatering boxes handling 335 tons per 24 hours. From (34) and (39) or (46); deliver 320 tons per 24 hours, as pulp, to (48) and 15 tons of slimes per 24 hours, as overflows, via distributor, to (51).

48. Two double 3-compartment hydraulic classifiers of the "Richards-Coggin" type, handling 320 tons per 24 hours. From (47); deliver spigots, amounting to 176 tons per 24 hours, to (56) and 144 tons in the overflows to (49).

49. Spitzkasten handling 144 tons per 24 hours. From (48); delivers spigots, amounting to 84 tons per 24 hours, to (54) and 60 tons of slimes per 24 hours in the overflow to (52).

50. One 10-inch elevator with 11-ply friction belting having a speed of 356 feet per minute, a life of 1 year, and 20 buckets, 5 × 8 inches, which elevate 160 tons of ore per 24 hours 14 feet and have a life of 1 year. One hundred 0.5675 × 1.25-inch elevator bolts, having a life of 1 year are used. The head pulley is 2 feet in diameter. From (51); delivers 160 tons per 24 hours to (59).

51. Three pulp thickeners, 10 × 18 feet, handling 190 tons per 24 hours. From (47) and (52); deliver 160 tons per 24 hours, as pulp, through the spigots to (50) and 30 tons per 24 hours in overflows to (62).

52. One 6-inch centrifugal pump lifting 175 tons per 24 hours 25 feet. From (49), (54), (56), and (57); delivers 175 tons per 24 hours to (51).

53. One 4-compartment hydraulic classifier handling 105 tons per 24 hours. From (34) and (39); delivers 105 tons per 24 hours, via spigots, to (57) and the overflow to (62).

54. Six Wilfley tables handling 84 tons per 24 hours besides 42 gallons of wash water per minute. From (49) and wash water from (36) and (37); deliver 9 tons of concentrates per 24 hours to (61), 8 tons of middlings per 24 hours to (55), 27 tons of slimes per 24 hours to (52), and 40 tons of tailings per 24 hours to (62).

55. One 10-inch elevator with 11-ply friction belting having a speed of 356 feet per minute, a life of 7 months, and 60 buckets, 5 × 8 inches, spaced 15 inches apart, which elevate 25 tons per 24 hours 43 feet and have a life of 7 months. Two hundred and fifty 0.5675 × 1.25-inch elevator bolts, having a life of 7 months, are used. The head pulley is 2 feet in diameter. From (54) and (56); delivers 25 tons per 24 hours, via distributor, to (46).

56. Thirteen Wilfley tables handling 176 tons per 24 hours besides 91 gallons of wash water per minute. From (48) and wash water from (36) and (37); deliver 20 tons of concentrates per 24 hours to (61), 17 tons of middlings per 24 hours to (55), 58 tons of slimes per 24 hours to (52), and 81 tons of tailings per 24 hours to (62).

57. Eight Wilfley tables handling 114 tons per 24 hours besides 56 gallons of wash water per minute. From (53) and (58) and wash water from (36) and (37); deliver 12 tons of concentrates per 24 hours to (61), 9 tons of middlings per 24 hours to (58), 30 tons of slimes per 24 hours to (52), and 63 tons of tailings per 24 hours to (62).

58. One 10-inch elevator with 11-ply friction belting having a speed of 356 feet per minute, a life of 1 year, and 40 buckets, 5 × 8 inches, which elevate 9 tons per 24 hours 26.5 feet and have a life of 1 year. One hundred and fifty 0.3125 × 1.25-inch elevator bolts, having a life of 1 year, are used. The head pulley is 2 feet in diameter. From (57); delivers 9 tons per 24 hours to (57).

59. Thirty-six Frue vanners handling 286 tons per 24 hours besides 108 gallons of wash water per minute. From (35), (37), and (50), and wash water from (36) and (37); deliver 32 tons of concentrates per 24 hours to (61), and 254 tons of tailings per 24 hours to (62).

60. Coarse-concentrates bins. From (24), (25), (32), (38), (42), and (43); deliver 159 tons of coarse concentrates per 24 hours, via narrow gauge railroad, to smelter.

61. Fine-concentrates bins. From (54), (56), (57), and (59); deliver 73 tons of fine concentrates per 24 hours, via narrow gauge railroad, to smelter.

62. Scoby sampler for the tailings. It has an opening 0.5 inch wide and takes a cut every 10 minutes traveling the full width of the tailings stream, first from one side and then from the other. Handles 468 tons of tailings per 24 hours. From (51), (53), (54), (56), (57), and (59); delivers sample, assaying about 1.0% in copper, to the assayer and about 468 tons of rejects per 24 hours to (63).

63. Coarse-sand tank handling about 468 tons per 24 hours. From (62); delivers settlings to waste and the overflow to (64).

64. Fine-sand tank. From (63); delivers settlings to waste, slimes to (66), and overflow to (65).

65. Water-settling system of 132,000 cubic feet capacity. From (64); delivers spigots to (66) and clear water overflow to (70).

66. One 6-inch centrifugal pump. From (64) and (65); delivers pulp to (67).

67. Thirty-two canvas-top slimes tables. From (66); deliver settled material to (68) and tailings to waste.

68. Eight 6-foot Frue vanners. From (67); deliver concentrates to (69) and tailings to waste.

69. Slimes-concentrates bin. From (68); delivers concentrates to briqueting plant and thence to smelter.

70. Four Worthington, 2-stage centrifugal pumps. From (65); deliver to (71).

71. Two redwood water-tanks of 100,000 gallons capacity each. From (70); deliver to mill system.

The fine concentrates from the Wilfleys tables as well as the vanners are delivered from each row of machines to a common launder. In this launder there runs a conveyor belt about 4 inches in width and traveling about 2 feet per second. This belt has riveted upon its under side narrow transverse strips of belting which enable the conveyor belt to drag the concentrates through the launder much as the discs in the disc conveyor drag ore through a trough. The separate conveyors, each serving a row of tables or vanners, discharge to a common conveyor which delivers finally to the concentrate bin. The advantage of this method of removing the concentrates over the usual methods lies in the saving of mill height and labor.

About 75% of all the ore mined by the company is of a second class or concentrating grade running from 3.8 to 4% in copper. The average saving in the older concentrators has been from 73 to 80%, varying with the amount of aluminous material in the ore, and this concentrator is probably doing even better work.

The smelter product is auriferous and argentiferous blister copper, which is refined electrolytically by the Nichols Chemical Company of New York, under a long-term agreement, for $15 per ton. The copper product is sold by the American Metal Company, Limited.

Labor and Wages.

The mines, mills, and smelter employ upwards of 4,000 men, 85% of whom are Mexicans. About 300 Chinese and several hundred skilled Americans are also employed. The wages for Americans average from $3.50 to $4 and for Mexicans about 3 Pesos per day.

Power and Water.

The power used for running the mill is electrical and is generated by steam.

The mines supply a portion of the water required for concentration, but the larger portion for concentration and all the water used in the boilers and for domestic purposes is secured from a pumping plant at Ojo de Agua, on the headwaters of Sonora River, 9.75 miles from the mine. The pumps have capacity to force 1,750,000 gallons daily through a 10-inch steel pipe line, against a head of 967 feet, to a reservoir on the hills above Ronquillo, whence water is delivered to the mine, reduction plants, and towns, under a substantial working pressure. The water system of the company has about 25 miles of mains,

ranging in size from 2 to 10 inches, and, owing to the cost of securing water, it is clarified and re-used wherever possible. The milling process throughout shows the great care exercised to save all the water possible, and 87.5% of the water used in the concentrators is recovered and re-used, or each gallon does duty eight times.

§ 1506. MILL NO. 174. OLD DOMINION COPPER MINING AND SMELTING COMPANY, GLOBE, ARIZONA.[18 62]—The capacity of this concentrator is about 500 tons per 24 hours.[102] The economic minerals are native copper, gold, silver, pyrite and chalcocite occurring quite abundantly, as almost impalpable specks in the ores which are of a soft clayey or porphyritic nature and highly kaolinized.[172] The gangue is a siliceous porphyry. The mill feed runs from 3 to 4% in copper with small values in gold and silver. The problem is to recover the copper. The mine produces three products,[40] viz: smelting ore (*a*) which is delivered, at a different time than material from (3), to (4); milling ore (*b*) which is delivered, at a different time than converter lining (*c*), to (5); and converter lining (*c*) which is delivered, at a different time than milling ore (*b*), to (5). The district sends to the plant, via railroad cars, two products, viz: smelting ore (*d*) which is delivered, at a different time than milling ore (*e*), to (1); and milling ore (*e*) which is delivered, at a different time than smelting ore (*d*), to (1).

1. Upper railroad storage-bins.[95 154] Receive custom ore (*d*) and (*e*) from the district mines via railroad cars, and deliver first (*d*) and then (*e*) ores to (2).

2. Mine cars. From (1); deliver, via adit tunnel, to (3).

3. Main mine shaft. From (2) and (9); delivers (*d*) ores to (4) and (*e*) ores to (5).

Crushing Plant.

4. Ten 70-ton steel receiving-bins, each 15 feet in diameter and lined with 0.25-inch steel. Receive (*a*) ores from the mine and (*d*) ores from (3) and (9); deliver ores alternately, via 4-foot opening through a hopper with gate and spout, to (6).

5. Six steel receiving-bins with details as in (4). Receive (*b*) ores from the mine, (*c*) material from the mines, and (*e*) ores from (3); deliver ores alternately, via 4-foot opening through a hopper with gate and spout, to (6).

6. One 30-inch belt conveyor having a conveying length of 122.71 feet, a speed of 175 feet per minute, and elevating the ore 11.08 feet. Together with counter-shaft, and when running with no load, 2.5 horse-power is required. Receives various ores, periodically from (4) and (5); delivers to (7).

7. One trommel, 4 × 8 feet, having 2-inch round holes punched in 0.88-inch cast manganese-steel, a speed of 13 revolutions per minute, and a slope of 1.5 inches to the foot. Requires 3 horse-power with no load. From (6); delivers oversize to (8) and undersize to (10).

8. Two Blake breakers with 10 × 20-inch jaw openings, making 250 thrusts per minute and breaking through a 4-inch ring. Without idlers or load 10.43 horse-power is required. From (7); deliver crushed ore to (9).

9. One 36-inch picking belt having a conveying length of 43.67 feet, a speed of 40 feet per minute, and elevating the ore 11.5 feet. With no load 1 horse-power is required. From (8); delivers smelting ores to (10); converter lining to (11); and, when running milling ores, delivers first-class ore to join smelting ore at (3) or (4) according to whether the ore being run is custom ore or not; and belt product to (11). Chips and waste are in all cases sent to the waste dump.

10. One 18-inch belt conveyor having a conveying length of 234.5 feet, a speed of 400 feet per minute, and elevating the ore 12 feet. For power see(14). From (7), (9), (13), and (31); delivers to (14).

11. One Blake breaker with a 10 × 20-inch jaw opening, making 250 thrusts

per minute, and breaking through a 2.5-inch ring. Without idler or load 4.33 horse-power is required. From (9); delivers crushed ore to (12).

12. One 18-inch elevator having a speed of 400 feet per minute and buckets, set 16 inches apart, which elevate the ore 29 feet. For power see (13). From (11); delivers to (13).

13. Rolls, 16 × 26 inches, making 60 revolutions per minute and crushing through a 1-inch ring. When running with no loads (12) and (13), together with the counter-shaft, require 6.0 horse-power. From (12); deliver crushed ore to (10).

14. Automatic tripper. (10) and (14) when running with no load require 4.0 horse-power. From (10); delivers smelting ores to (15), converter lining to (16), and milling ores to (17).

15. Seven 140-ton storage tanks, 15 feet in diameter with hemispherical bottoms having cast-iron hoppers and horizontal arc gates operated by hand wheel and pinion. From (14) and (31); deliver to (18).

16. One 140-ton storage tank with details as in (15) except that the arc gates are longitudinal. From (14) and (31); delivers to (18).

17. Two 210-ton storage tanks, 15 feet in diameter with hemispherical bottoms having cast-iron hoppers. From (14); deliver to (20).

18. Standard-gauge, hopper-bottomed steel cars of 50 tons capacity. From (15) and (16); deliver to (19).

19. Smelter storage bins. From (18); deliver to smelter as required.

20. Two Challenge feeders, each capable of handling from 20 to 25 tons per hour. From (17); deliver to (21).

21. One 16-inch belt conveyor having a conveying length of 210 feet, a speed of 200 feet per minute, and an inclination of 15°. From (20); delivers, via launder to which water is added and a mixing box, to (32) in the concentrator.

The crushing plant is operated one 10-hour shift per day with the following help: 1 foreman, 2 feeders, 1 crusher and screen man, one oiler, cleaner, and belt man, and 1 ore picker. The labor of the regular force on repairs is small and is charged to operations. The total cost of labor, materials, workshop, and outside labor for repairs etc., averages less than 6.7 cents per ton.

The crushing department easily handles 25,000 tons of ore a month when operating one 10-hour shift per day. It can handle 75 tons per hour.

Power.

A 70 horse-power motor runs this department and the motor with the main shaft, 2 counter-shafts, and 3 idlers on 3 other counter-shafts requires 11.0 horse-power without other load.

The power consumed by each machine when taken under running conditions, separately and with no load, adds up to 42.22 horse-power. All the machinery, excepting 3 idlers, running with no load, 10 minutes after starting, after 16 hours' rest, required 39.06 horse-power. Same as above, after running 1.75 hours, required 35.59 horse-power.

All the machinery, excepting 3 idlers, running with no load, 10 minutes after starting, after 1.25 hours' rest, required 36.19 horse-power. Same as above, after running 3.25 hours, required 31.55 horse-power.

Tests made while crushing siliceous ore for converter lining:

Test 1, all machinery running loaded					40.08	horse-power	required.		
" 2 " " " "					44.44	"	"	"	
" 3 " " " "					52.16	"	"	"	
" 4 " " " "					44.44	"	"	"	
" 5 " " " "					59.67	"	"	"	
" 6 " " " "					53.55	"	"	"	
" 7 " " " "					49.68	"	"	"	
" 8 " " " "					70.01	"	"	"	
Average					51.75	"	"	"	

In the above, test 3 was determined from the maximum figures on an indicator card taken over 30 seconds time. Test 8 was determined from figures on an indicator card caught at a time of an observed maximum load on the engine. Tests 1, 2, 4, 5, 6, and 7 were made when the picking belt showed a good average load.

Sampling Department.

As the ores come in, one tenth of class (*e*), every tenth car of classes (*a*) and (*d*), and every twentieth mine car of classes (*b*) and (*c*) are delivered directly to separate bins in (22).

22. Twelve sample bins. From railroad and mine cars; deliver, each class separately, to (23).

23. One 24-inch belt conveyor. From (22); delivers to (24).

24. One Blake breaker with a 10 × 20-inch jaw opening. From (23); delivers crushed ore to (25).

25. One 22-inch belt conveyor. From (24); delivers to (26).

26. Rolls, 16 × 36 inches. From (25); deliver crushed ore to (27).

27. Vezin sampler. From (26); delivers sample amounting to 10% of the original to (28) and the rejects to (31).

28. Belt conveyor. From (27); delivers to (29).

29. Rolls, 14 × 27 inches. From (28); deliver crushed ore to (30).

30. Jones sampler. From (29); delivers duplicate samples, one of which, if not needed, can go to (31) and the other or both can go to be quartered and ground successively as is usual in sampling mills, making samples which go to the assayer and rejects which go to (31).

31. Elevator. From (27) and (30); delivers either to (10), (15), or (16).

Labor.

Five men are employed in this department which operates one 10-hour shift per day.

The building is of steel with a sheet-iron sampling floor. Besides the machinery enumerated there is a small crusher and meal mill for large "grab" samples. There is also the usual drying and bucking rooms with the necessary tools.

Power.

The machinery is driven by a 40 horse-power motor and the maximum load is about 38.5 horse-power.

Concentrating Department.

32. One of 2 trommels, 4 × 8 feet, with 0.75-inch round perforated holes and a slope of 0.75 inch to the foot. The trommel shafts are 5 inches in diameter except in the bearings where they are 3.44 inches in diameter. Each has 6 spider arms, 1.25 inches in diameter, heavy split hubs, ball and socket bearings, and wooden housings. The spider arms are riveted to a tire, 0.5 × 3 inches, screwed into the hub and held by a lock nut. From (21); delivers oversize to (41) and undersize to (33).

33. One of two trommels with 0.375-inch round perforated holes and other details as in (32). From (32) and (50); delivers oversize, via mixing box, to (36) and undersize to (34).

34. One of two trommels with 6-millimeter round perforated holes and other details as in (32). From (33); delivers oversize, via mixing box, to (37) and undersize to (35).

35. Two trommels with 2.5-millimeter round perforated holes and other

details as in (32). From (34); delivers oversize, via mixing box, to (38) and undersize to (39).

36. Two 1-compartment Harz jigs with sieves, 24 × 40 inches, of 4 mesh, 12 wire. The plungers, 20 × 40 inches, make 110 2.5-inch strokes per minute. From (33), fed with 0.75 to 0.375-inch material and hydraulic water from (61); deliver discharges, as concentrates, via main launder, to (75), hutch products to (50), and tailings to (42).

37. One 2-compartment Harz jigs with sieves, 24 × 36 inches, of 6 mesh, 16 wire. The plungers, 20 × 36 inches, make 170 1.5-inch strokes per minute. From (34), fed with 9.53 to 6-millimeter material and hydraulic water from (61); delivers discharges, as concentrates, via main launder, to (75) and tailings to (62).

38. Two 2-compartment Harz jigs with sieves, 24 × 36 inches, of 8 mesh, 18 wire. The plungers, 20 × 36 inches, make 200 0.75-inch strokes per minute. From (35), fed with 6 to 2.5-millimeter material and hydraulic water from (61); deliver discharges, as concentrates, via main launder, to (75) and tailings to (62).

39. Two 2-compartment modified Richards' classifiers. From (35) and hydraulic water from (61); deliver spigots to (40) and overflows to (44).

40. Four 3-compartment Harz jigs with sieves, 24 × 36 inches, of 10 mesh, 19 wire. The plungers, 20 × 36 inches, make 240 0.375-inch strokes per minute. From (39) and hydraulic water from (61); deliver concentrates, via main launder, to (75) and tailings to (43).

41. One modified Allis-Chalmers rolls, 16 × 36 inches. From (32); deliver crushed ore to (50).

42. One dewatering box with shovel wheel. From (36); delivers tailings to (49) and water to (51).

43. One dewatering box. From (40), (52), and (53); delivers tailings with necessary water to (70) and remaining water to (51).

44. Spitzkasten. From (39); delivers spigot to (52) and overflow to (45).

45. Spitzkasten. From (44); delivers spigot to (53) and overflow to (46).

46. Three 10,000-gallon redwood pulp-thickeners, 10 feet in diameter by 18 feet deep. The bottoms are conical and have false linings. The feed enters through a box which extends to within 4 feet of the bottom, and a pipe, through the bottom, comes to within 5 or 6 feet of the water surface and drains off the pulp through a plug fitted with a 0.375-inch nipple. The overflows are collected by circular launders. From (45); deliver spigots, as feed, to (47) and overflows, as wash water, to (47).

47. Nine 6-foot Frue vanners. From (46) and wash water from (46); deliver concentrates to (48) and tailings to (76).

48. Two 10 × 54-inch Frenier sand pumps working in two stages. From (47), (55), (56), (65), (68), (72), and (74); deliver, via launder, to (75).

49. One modified Allis-Chalmers rolls, 16 × 36 inches. From (42); deliver crushed tailings to (50).

50. One 18-inch elevator. From (36), (41), and (49); delivers to (33).

51. Two slimes-settling bins. From (42), (43), (52), (53), (62), and (69); deliver spigots to (54) and overflows, via tank, to (60).

52. Six No. 5 Wilfley tables. From (44); deliver concentrates, via main launder, to (75), middlings to (43), slimes to (51), and tailings to (56).

53. Three No. 5 Wilfley tables. From (45); deliver concentrates, via main launder, to (75), middlings to (43), slimes to (51), and tailings to (56).

54. Three 10,000-gallon pulp thickeners. From (51); deliver spigots to (55) and overflows, via tank, to (57).

55. Nineteen 6-foot Frue vanners. From (54) and wash water from (78); deliver concentrates to (48) and tailings to (76).

56. One double-decked round table. From (52) and (53); delivers concentrates to (48) and tailings to (76).

57 One 3-inch centrifugal pump. From (54); delivers pulp to (58).

58. One slimes-settling bin. From (57); delivers spigot to (59) and overflow, via tank, to (60).

59. Slimes bin. From (58). The pulp is used as a binder at the briqueting plant at the smelter.

60. One 5-inch centrifugal pump pumping against a 37-foot head. From (51) and (58); delivers water to (61).

61. Clear-water tank. From (67); delivers hydraulic water to (36), (37), (38), (39), (40), (64), and (71).

62. One dewatering box. From (37) and (38); delivers spigot to (63) and overflow to (51).

63. One 6-foot Waddell Chili mill having herring-bone steel slotted screens with 16 slots to the inch, each 1.07 millimeters wide and sometimes Tyler No. 71 rolled-wire screens. Makes about 30 revolutions per minute and has cast-steel dies and rings, one set lasting 160 days. From (62), fed with 6.0 to 0-millimeter material; delivers pulp to (64).

64. Two 2-compartment modified Richards' classifiers. From (63) with hydraulic water from (61); deliver spigots to (65) and overflows to (66).

65. Five No. 5 Wilfley tables. From (64) with wash water from (78); deliver concentrates to (48), middlings and slimes to (67), and tailings to (76).

66. Spitzkasten. From (64); delivers spigot to (68) and overflow to (67).

67. One 12-inch middlings elevator. From (65), (66), (68), (72), (73), and (74); delivers pulp to (69).

68. Three No. 5 Wilfley tables. From (66) with wash water from (78); deliver concentrates to (48), middlings and slimes to (67), and tailings to (76).

69. One dewatering box. From (67); delivers spigot to (70) and overflow to (51).

70. One 6-foot Waddell Chili mill with 1.5-millimeter round holes punched in herring-bone steel and other details as in (63). From (43) and (69), fed with 2.5 to 0-millimeter material; delivers pulp to (71).

71. Two 2-compartment modified Richards' classifiers. From (70) with hydraulic water from (61); deliver spigots to (72) and overflows to (73).

72. Four No. 5 Wilfley tables and 1 Overstrom table. From (71) with wash water from (78); deliver concentrates to (48), middlings and slimes to (67), and tailings to (76).

73. Spitzkasten. From (71); delivers spigot to (74) and overflow to (67).

74. Four No. 5 Wilfley tables. From (73) with wash water from (78); deliver concentrates, via Frenier sand pump, to (48); middlings and slimes, via Frenier sand pump, to (67); and tailings to (76).

75. Automatic concentrates sampler which cuts out about one part in 100. From (36), (37), (38), (40), (48), (52), and (53); delivers sample to assayer and rejects to (77).

76. Automatic tailings sampler which cuts out about one part in 10,000. From (47), (55), (56), (65), (68), (72), and (74); delivers sample to assayer and rejects to the waste dump.

77. Four 50-ton concentrates bins. From (75); deliver concentrates to (79) and overflows to (78).

78. Nine overflow bins having a capacity of 20 tons of dry slimes. From (77); deliver wash water to (55), (65), (68), (72), and (74) and settled slimes, periodically, to the smelter.

79. Steel railroad cars of 50 tons capacity with about 8 inches of fine slag from the Old Dominion smelter, containing 2.5% copper covering the

doors. From (77); deliver concentrates, containing about 12% moisture, to the smelter.

Under ordinary conditions the mill could easily run 98% of the year and make a saving of from 80 to 84% of the values in the crude ore.

A screen test of the general tailings follows:

		On 20 mesh	2.60	percent.
Through 20 mesh		" 40 "	10.30	"
" 40 "		" 60 "	9.85	"
" 60 "		" 100 "	13.80	"
" 100 "		" 200 "	14.85	"
" 200 "			49.05	"
Total			100.45	"

Labor and Wages.

The concentrator when operating three 8-hour shifts per day requires the following regular force per 24 hours: 1 foreman, 3 shift bosses, 6 jig men, 3 engineers and oilers, 3 Chili millmen, 3 vanner men, 1 concentrates loader, and 3 repair men and carpenters. In addition there is a certain amount of labor used in repair work, which averages about 1.6 shifts per day, bringing the concentrator labor up to an average of 24.6 shifts per day. This cost amounts to almost 25 cents per ton.

Power and Water.

The different machines are driven by counter-shafts from the main shaft which, in turn, is driven directly from the engine. The engine once ran the old smelter. It is a single-cylinder Corliss engine with a 22 × 30-inch cylinder and is run condensing with 90 pounds of steam at the gauge.

When the concentrator is handling from 450 to 500 tons per 24 hours the power consumed varies, according to the hardness of the ore and the condition of the roughing rolls in the crushing department, between 170 and 188 indicated horse-power and averages about 178. Observations as low as 162 and as high as 209 indicated horse-power have been made.

Owing to the abundance of water at Globe about the only water re-used is that recovered from the jig tailings. Nearly 1,500 gallons of water, per ton of ore treated, go to waste.

Since enlarged to full capacity the concentrator will handle between 450 and 550 tons per 24 hours, with room still left for building an exact duplicate of this plant. The foundations of the buildings and machinery are of broken rock or slag and cement. The buildings are of structural steel built from designs furnished by a structural steel company based upon preliminary drawings of the requirements. The buildings were manufactured by the structural steel company at a contract price and placed by the same company on the foundations built by the Old Dominion Copper Mining and Smelting Company. A pound price was made for additional work. No. 22 corrugated iron was used on the roof and No. 24 for the sides. The buildings are practically water tight. The company saves electricity by painting the roofing and sides white on the inside, giving a better diffusion of the fewer lights. This also gives the mill a neat appearance and the men pride.

In skeleton the mill has only 3 floors as follows: the upper floor for roughing, the lower for finishing, and the intermediate for re-grinding and pulp thickening. Rolls, trommels, finishing jigs, and Wilfley tables are on the upper floor, the roughing jigs are on a small staging between the upper and intermediate floors; Chili mills and pulp thickeners are on the intermediate floor; and the vanners, etc., are on the lower floor.

The Challenge feeders (20) give a perfectly uniform feed which the Wall feeders, preceding them, did not do.

The slope of the trommels is 0.75 inch to the foot, but it is believed to be a little slight and it is thought that 1.25 inches to the foot would be better and save wear.

Russia-iron slotted screens were formerly used on the Chili mills, but they did not have the necessary capacity with the mill treating 500 tons daily.

The vanner legs are especially designed of cast iron, firmly braced one against the other, and bolted through the floor and through built-up continuous joists.

The shafting of the mill is all carried upon steel supports. Ring-oiling ball and socket pillow blocks are used exclusively. Once in line, with the bearings firmly clamped, they have no difficulty with the shafts and run with a minimum loss of power.

T. MILLS SAVING COPPER AND SULPHUR VALUES.

Mill 175 illustrates this class.

§ 1507. MILL NO. 175. EUSTIS MINING COMPANY, EUSTIS, P. Q., CANADA. — The economic mineral is a cupriferous pyrite.[78] The vein matter, as found in the mine, is divided into three grades. First the high-grade ore, which is usually a fine-grained pyrite carrying about 2.5% of copper and which, in many cases, is singularly free from impurities. This grade will probably run over 45% in sulphur as it occurs in the mine. Second there is lean ore, which is a comparatively coarse-grained pyrite in quartz and small particles of country rock which is a talcy schist. Third there is a fine-grained crystalline limestone carrying about 65% of silica. The problem is to save the copper and sulphur. Capacity, about 200 tons per 24 hours.

The ore, coming from the mine in skips,[120] is delivered to (1) and (25).

1. Pocket with a capacity of about 10 tons. From the mine; delivers, via electric tram, to (2).

2. Two grizzlies sloping at 35°. Grizzly "A" is situated on the west side of the mill and has 2.75-inch spaces between the bars. Grizzly "B" is on the east side of the mill and has 2-inch spaces between the bars. When grizzly "A" is used, ore comes from (1); the oversize is delivered to (3) and the undersize to (14) and (34). When grizzly "B" is used, ore comes from (1); the oversize is delivered to (26) and the undersize to (34).

3. Picking floor where the ore is hand picked, a sledge being used to separate the shipping ore from the lean and waste ores. From (2); delivers shipping ore to (4) and (5), lean ore to (24), and waste ore to dump.

4. Farrel Bacon breaker with a 10 × 16-inch jaw opening, breaking to 3 inches. Manganese-steel jaw plates are used. From (3); delivers crushed ore to (6).

5. Farrel Bacon breaker with a 6 × 20-inch jaw opening, breaking to 3 inches. Manganese-steel jaw plates are used. From (3) and (16); delivers crushed ore to (6).

6. Fourteen-inch elevator with an 8-ply rubber belt, a speed of 200 feet per minute, and elevating the ore 34 feet. From (4), (5), and (9); delivers to (7).

7. Double-crimped wire screen with 0.57-inch square holes. From (6); delivers oversize to (8) and undersize to (10).

8. Trommel, 3 × 6 feet, divided into two sections. The first section has 1-inch round holes and the second 3-inch round holes. From (7); delivers 1 to 0.75-inch stuff to (11), 3 to 1-inch stuff to (12), and material larger than 3 inches to (9).

9. Spalling floor. Slabs broken by hammer. From (8); delivers to (6).

10. Pocket for fines. From (7); delivers to (13).

11. Pocket for pea ore. From (8); delivers to (13).

12. Pocket for lump ore. From (8); delivers to (13).

13. Wooden push car holding from 1.25 to 1.5 tons when full. From (10), (11), and (12); delivers to any railroad bin or stock pile.

14. Bin. From (2); delivers, via hand-regulated gate, to (15).

15. Horizontal shaking screen with 1-inch round holes, inclined supports, and making 178 strokes per minute. From (14); delivers oversize to (16) and undersize to (18).

16. Thirty-two inch inclined rubber picking-belt having a conveying length of 16 feet and a speed of 12 feet per minute. From (15). Lean ore is picked and sent to (17) and the residue is either sent to (5) or waste according to its grade.

17. Twelve-inch belt conveyor. From (16); delivers to (18).

18. Sixteen-inch belt conveyor with a speed of 200 feet per minute. From (15) and (17); delivers to (19).

19. Fourteen-inch extra heavy "Camel Brand" hair-belt elevator having a speed of 195 feet per minute and sheet-steel buckets, 14 inches wide, elevating the ore 44 feet. From (18), (23), (24), and (37); delivers to (20).

20. Trommel, 3 × 8 feet, with 1.25-inch round holes, making 12 revolutions per minute. From (19); delivers oversize to (22) and undersize to (21).

21. Mill bin having a capacity of 100 tons. From (20); delivers to (38).

22. Spout. From (20); delivers to (23).

23. Dodge breaker with a 11 × 15-inch jaw opening and set for close breaking. Manganese-steel jaw plates are used. From (22) and (36); delivers crushed ore to (19).

24. Farrel Bacon breaker with a 15 × 24-inch jaw opening and set for close breaking. Manganese-steel jaw plates are used. From (3), (25), and (26); delivers crushed ore to (19).

25. Pocket for lean ore from the mine. From the mine via electric tram; delivers to (24).

26. Hand-picking floor. From (2); delivers shipping ore to (27), lean ore to (24), and waste rock to dump.

27. Farrel Bacon breaker, 10 × 16 inches, breaking to 3 inches. Manganese-steel jaw plates are used. From (26) and (36); delivers crushed ore to (28).

28. Steep fixed screen with double-crimped wire cloth having 0.75-inch square holes. From (27); delivers oversize to (29) and undersize to (31).

29. Wooden push car with details as in (13). From (28) and (36); delivers to (30).

30. Railroad bin, No. 4, having a capacity of 125 tons. From (29); delivers to market.

31. Elevator with an 8-ply rubber belt and 8-inch buckets. From (28); delivers to (32).

32. Wooden push car with details as in (13). From (31); delivers to (33).

33. Railroad bin, No. 3, having a capacity of 125 tons. From (32); delivers to market.

34. Bin. From (2); delivers, via hand-regulated gate, to (35).

35. Horizontal shaking screen with 1-inch round holes making 178 strokes per minute. From (34); delivers oversize to (36) and undersize to (37).

36. Thirty-two inch picking belt. From (35); delivers hand-picked shipping ore to (27); lean ore to (23); waste rock to dump; and the remainder, as shipping ore, to (29).

37. Fourteen-inch conveyor. From (35); delivers to (19).

Concentration Mill.

38. Two standard Challenge feeders. From (21); deliver to (39).

39. Sixteen-inch belt conveyor. From (38); delivers to (40).

40. Distributor. From (39); delivers to (41).

41. Fraser and Chalmers style "B" belt-driven rolls, 20 × 30 inches, making 105 revolutions per minute. From (40); deliver crushed ore to (42).

42. Twelve-inch elevator with an 8-ply heavy rubber-faced belt having a speed of 200 feet per minute and malleable-iron buckets, style "AA," elevating the ore 39 feet. Run wet. From (41) and (44); delivers to (43).

43. Two trommels, 3 × 4 feet, with 5-mesh, 15-wire (Birmingham) cloth double-crimped screens, making 16 revolutions per minute. From (42); deliver oversize to (44) and undersize to (45).

44. Two belt-driven rolls, 8 × 24 inches, run wet and making 140 revolutions per minute. From (43) and (52); deliver crushed ore to (42).

45. Pulsator with 6 spigots and no overflow. From (43); delivers the first spigot to (46), second spigot to (47), third spigot to (48), fourth spigot to (49), fifth spigot to (50), and sixth spigot to (51).

46. Two Wilfley tables. From (45); deliver concentrates to (53), middlings to (52), and tailings to waste.

47. Two Wilfley tables. From (45); deliver concentrates to (53), middlings to (52), and tailings to waste.

48. One Wilfley table. From (45); delivers concentrates to (53), middlings to (52), tailings to waste, and clean backwater to (55).

49. One Wilfley table. From (45); delivers concentrates to (53), middlings to (52), tailings to waste, and clean backwater to (55).

50. One Wilfley table. From (45); delivers concentrates to (53), middlings to (52), tailings to waste, and clean backwater to (55).

51. One Wilfley table. From (45); delivers concentrates to (53), middlings to (52), tailings to waste, and clean backwater to (55).

52. Eight-inch elevator with an 8-ply rubber belt. From (46), (47), (48), (49), (50), and (51); delivers to (44).

53. Two wooden push cars with details as in (13). From (46), (47), (48), (49), (50), and (51); deliver to (54).

54. Concentrates bins or stock pile. From (53); deliver to market or storage.

55. Morris 3-inch centrifugal pump. From (48), (49), (50), and (51); delivers to (56).

56. Mill tank of 7,900 gallons capacity. From (55) and (57); delivers to mill system.

57. One 4-inch Gould volute centrifugal pump making 700 revolutions per minute and handling about 200 gallons of water per minute. From (58); delivers to (56).

58. One 6-inch pipe line. From (59); delivers to (57).

59. One 3-inch Worthington pump direct connected to a 2-stage, 15 horsepower turbine making 1,440 revolutions per minute. From the river; delivers, from 200 to 250 gallons of water per minute, to (58).

Labor.

Two men are required to operate the mill and a part of a third man's time to do the oiling. Two men are also required in the basement to handle the concentrates. The number of men in the concentrating department varies between 4 and 10. Six boys are employed sorting ore and doing light work. Two machinists and a carpenter are also kept busy the most of the time.

Power and Water.

About 150 horse-power is required to operate the entire plant. From 300 to 350 gallons of water per minute are probably required to run the mill.

U. MILLS SAVING ONLY COPPER VALUES.

As examples of this important class Mills 176, 177, 178, 179, 180, 181, and 182 are given, showing the practice in two districts.

§ 1508. MILL NO. 176. PIKE HILL MINES, INCORPORATED, CORINTH, VERMONT.[115] — The capacity of this mill is about 40 tons per 24 hours. The economic minerals are chalcopyrite and pyrrhotite in a siliceous gangue, and the average copper content of the crude ore is from 2 to 4%.[174] The problem is to save the chalcopyrite and pyrrhotite.

The ore comes from the mines [2] via cars and is delivered to (1).

1. Picking floor. From the mine cars; delivers selected ore, containing about 12% copper, to the Nichols Chemical Company; milling ore, containing about 3.8% copper, to (2); and waste rock to the dump.
2. Buchanan breaker. From (1); delivers crushed ore to (3).
3. Picking belt. From (2); delivers selected ore, containing about 12% copper, to the Nichols Chemical Company and the remainder to (4).
4. Trommel with 0.75-inch holes. From (3); delivers oversize to (5) and undersize to (6).
5. Buchanan corrugated rolls. From (4); deliver crushed ore to (6).
6. Cylindrical drier. From (4) and (5); delivers to (7).
7. Elevator. From (6); delivers to (8).
8. Trommel with 0.125-inch holes. From (7); delivers oversize to (9) and undersize to (10).
9. Buchanan smooth rolls. From (8) and (11); deliver crushed ore to (10).
10. Elevator. From (8) and (9); delivers to (11).
11. Trommel with 20 meshes to the inch. From (10); delivers oversize to (9) and undersize to (12).
12. Trommel with 30 meshes to the inch. From (11); delivers oversize and undersize separately and periodically to (13).
13. Four-pole Wetherill magnetic separator. From (12); delivers magnetic product, or pyrrhotite, to the storehouse and non-magnetic product, or chalcopyrite and gangue, to (14).
14. Roasting cylinder. From (13); delivers to (15).
15. Elevator. From (14); delivers to (16).
16. Cooler which is only a water-cooled cylinder. From (15); delivers to (17).
17. Four-pole Wetherill magnetic separator. From (16); delivers magnetic product, or chalcopyrite, to the Nichols Chemical Company and the non-magnetic product, or siliceous gangue, to waste.

One hundred tons of crude ore yield: 20 tons of selected ore, carrying 12% copper; 10 tons of chalcopyrite concentrates, carrying from 13 to 15% copper; 35 tons of pyrrhotite concentrates, carrying about 1.5% copper; and 35 tons of waste, carrying 0.5% copper.

The mill has very limited living accommodations and is handicapped by inefficient labor. The power and water supplies have also caused trouble and the mill is now installing a producer gas engine plant. A small smelting plant is being erected where pyritic smelting will be tried, the pyrrhotite concentrates being used to flux the silica in the ore.

§ 1509. MILL NO. 177. CALUMET AND HECLA MINING COMPANY, CALUMET, MICHIGAN.[1] — The two mills of the Calumet and Hecla are located at Lake

Linden on Torch Lake, 5 miles from the mine.[168] The total capacity of both mills is over 8,000 tons per 24 hours or about 300 tons per section when treating conglomerate rock, and nearly double this capacity when treating amygdaloid rock.[113 158] The mills run 24 hours per day, 6 days a week. The rock consists of the economic minerals native copper and a little native silver in a gangue of rhyolite conglomerate carrying a little calcite, epidote, and martite. The problem is to save the copper and silver.

The rock is hoisted[15] from the mine in skips of 10,000 and 15,000 pounds capacity each and dumped upon (1).

Rock House at Mine.

There is one rock house for each shaft and there are 17 shafts working. Since all are alike in process, only one will be described below.

1. One grizzly with 3.5 inches between the steel bars which are 4 inches in diameter and placed at an angle of 30°. From the mine; delivers oversize, which is hand picked, into (*a*) copper nuggets which go to (20), (*b*) waste rock which goes back to the mine for filling, (*c*) residue which is sent to (2), and undersize to (3).

2. Two Blake breakers, one having a jaw opening 20 × 24 inches and the other 24 × 36 inches, making about 190 thrusts per minute, and breaking to 3.5 inches. From (1); deliver crushed rock to (3).

3. Rock-house bins, 40 × 50 feet, and from 10 to 20 feet deep with flat bottoms and 16 chutes. From (1) and (2); deliver, via sixteen gates, chutes, and railroad cars, to (4).

Mills at Lake Linden.

There are two entirely independent mills, the Calumet and the Hecla, in total having 28 sections, of which, in 1907, there were 22 practically similar sections treating conglomerate rock, and 6 somewhat different from the above, but similar to each other, working on amygdaloid rock. One conglomerate section will be described below.

4. Mill bin with a flat bottom and a capacity of 1,000 tons. From (3); delivers to (5).

5. One assorting table, 3 × 7.5 feet, making 65 strokes per minute. From (4) and (8); delivers to (6) while barrel-work copper is picked and goes to (20) and wood is picked and goes to waste.

6. One Leavitt steam stamp using inclined 4-sided screens with 4.76-millimeter round holes and equipped with mortar jigs (7). From (5); delivers pulp, via distributor, to (9); coarser and richer material to (7); and mortar cleanings, every fourth day, to (8).

7. Two mortar jigs which consist of two openings in the side of the mortar of (6), each about 1.5 × 12 inches, at the lower edge of the screen. Each opening leads down to a sieve below with holes 25 millimeters in diameter and 4 × 12-inch dimensions. The sieves have connections with jigging plungers, 8 inches in diameter, making 195 2-inch strokes per minute, which subject the material on the sieves to a regular jigging action, the hutch work and sieve discharges being discharged intermittently by a series of levers and pockets. From (6); deliver skimmings off screens and hutch work to (20) and tailings, or cover work, to (8).

8. One 1-compartment Woodbury-Benedict jig for 11 sections. From (6) and (7); delivers discharge and hutch work to (20) and tailings to (5).

9. Two 2-compartment Woodbury-Benedict jigs having a capacity of 250 tons per 24 hours on feed carrying about 40% slimes. All screens have 10 meshes to the inch and in the first compartments are 24 × 36 inches, in the

second, 30 × 50 inches. The plungers in the first compartments are 12 × 24 inches and make 195 0.875-inch strokes per minute while the plungers in the second compartments are 12 × 50 inches and make 195 0.75-inch strokes per minute. From (6); deliver discharges to (20); hutch work to (13); slimes, by special contrivance, to (15); and tailings, via distributors, to (10).

10. Two 3-compartment Woodbury-Benedict jigs having a capacity of about 150 tons per 24 hours. The plungers are all 12 × 50 inches and make 195 strokes per minute varying in length from 0.5 inch in the first to 0.375 inch in the third compartments. The screens are all 30 × 50 inches and have 12 meshes to the inch. The tail height is 2.625 inches. From (9); deliver discharges and skimmings to (11); hutch work, via hydraulic classifiers, to (13); the classifiers making concentrates which go to (20); and tailings which go to (21).

11. One 6-foot Chili mill of the Calumet and Hecla type making 29.5 revolutions per minute, crushing through 16-mesh diagonal needle-slot screens and having a capacity of 35 tons on conglomerate rock and 50 tons on amygdaloid rock per 24 hours. From (10) and (14); delivers pulp to (12).

12. Two Wilfley tables. From (11); deliver concentrates to (20), middlings to (14), and tailings to (21).

13. Two Wilfley tables. From (9) and (10); deliver concentrates to (20), middings to (14), and tailings to (21).

14. One Wilfley table. From (12) and (13); delivers concentrates to (20), middlings to (11), and tailings to (21).

15. Two settling tanks, 5 feet wide by 9 feet long, handling together 125 tons of slimes per 24 hours. From (9); deliver spigots to (16) and overflows to (21).

16. Two 4-deck Evans slime tables, 16 feet in diameter, having speeds of 1 revolution in 57 seconds, slopes of 1.5 inches to the foot, and a capacity of from 14 to 18 tons per 24 hours. From (15); deliver concentrates to (17) and tailings to (21).

17. Four Wilfley tables. From (16); deliver concentrates to (20), middlings to (18), and tailings to (21).

18. One settling tank. From (17) and (19); delivers spigot to (19) and overflow to (21).

19. One Wilfley table. From (18); delivers concentrates to (20), middlings to (18), and tailings to (21).

20. Mineral boxes. Three grades of concentrates in addition to barrel-work copper are kept separate from each other and from each mill. The concentrates in (20) averaged about 60% copper in 1907. From (1), (5), (7), (8), (9), (10), (12), (13), (14), (17), and (19); deliver, via cars, to smelter.

21. Five sand wheels for both mills. From (10), (12), (13), (14), (15), (16), (17), (18), and (19); deliver over 8,000 tons per 24 hours through a launder, on a high trestle, into Torch Lake.

The amygdaloid practice differs from the conglomerate chiefly in the crushing. In this practice (6) is provided with 15.9-millimeter openings, 1 mortar jig (7), and 1 plain hydraulic discharge. The pulp from the mortar is screened through 2 trommels having either 4.76 or 6.35-millimeter holes, the undersize going to (9) and from that point on much as described under the method of treating conglomerate rock. The oversize goes to two Woodbury-Benedict bull jigs with 15 × 50-inch plungers making 180 1.75-inch strokes per minute, which deliver cup concentrates to (20); hutch products to (13); and tailings, which are returned by an elevator, either to (6) or to a set of rigid rolls, 16 × 36 inches, whose crushed product goes back to the trommels with the material from (7). Moreover, in the amygdaloid practice, the Evans tables (16) are omitted and the plug discharges from (15) go directly to eight Wilfley tables (17).

Some of the Wilfley tables are 6 feet wide at the head end, but most of them are 7. The speeds vary from 235 to 245 thrusts per minute, the length of strokes from 0.625 to 0.875 inch, and the capacities from as low as 8 tons on fines to as high as 18 tons per 24 hours on the coarser material.

The power consumed is about 30 horse-power per section. Water consumed is about 1,250,000 gallons per 24 hours for a conglomerate section, and 2,000,000 gallons for an amygdaloid section excluding that used for condensing purposes.

In addition to the above equipment there is under construction (Jan. 1, 1908) additional machinery for treating the present tailings from the richer portions of the conglomerate rock and the rich tailings of former years. To further treat the slimes there have been installed for each section 8 Calumet tables, a reciprocating table of the Wilfley type without the diagonal termination of the riffles. These tables will handle the tailings of (16), deliver tailings to (21) and concentrates to be further treated on a Wilfley table; 16 Calumet tables supplying concentrates to one Wilfley. For further treatment of the coarser tailings there has been erected a re-grinding plant. This takes the tailings from (10) and (13). It consists of 48 Chili mills which will grind through 20 or 24 meshes to the inch, the product of which, after classification, will be treated on 136 Wilfley tables. The capacity of this plant will be from 1,200 to 1,500 tons per 24 hours.

The rock is treated in the following proportions:

73	percent	of	the	rock	treated	comes	from	the	Calumet conglomerate
26	"	"	"	"	"	"	"	"	Osceola amygdaloid
1	"	"	"	"	"	"	"	"	Kearsage "

The Calumet conglomerate is the hardest and the Osceola amygdaloid the softest rock in the district.

In 1905 the cost of making metallic copper at this plant was about 7 cents a pound. Tests have been conducted with a Nordberg steeple-compound stamp head, and it was found capable of treating 375 tons of Calumet conglomerate or 600 tons of Osceola amygdaloid per day.

The mill gives out no analysis. The rock formerly ran about 4% copper, but is now running somewhat less than one-half of this amount.

Sand Wheels.

There are two sand-wheel houses, one for each mill. The Calumet wheel house has two sand wheels of 50 feet nominal diameter; the Hecla wheel house has three sand wheels of 40, 50, and 60 feet nominal diameters. The 60-foot sand wheel is situated in a 3-story steel annex. It weighs 300 tons, is 12 feet wide, and is mounted on massive concrete foundations.

The axle weighs 21 tons, is 26.5 feet long and 30 inches in diameter, with a 16-inch diameter hole through it. The axle revolves in cast-iron pedestals supported by heavy cast-iron bed plates weighing 240 tons. The rim is made up of 20 segments, each supported by two radial steel spokes 3.875 inches in diameter. There are 544 buckets placed in pairs at equal distances around the inside periphery of wheel. Each bucket is 4 inches wide by 4.25 feet long and holds 27 gallons, making the capacity of the wheel 14,700 gallons per revolution. The wheel is driven by gear and pinion from a 700 horse-power motor.

Upwards of 30,000,000 tons of tailings carrying from 0.4 to 1% of copper are in Torch Lake. There is probably about 200,000 tons of copper in this amount of tailings.

Water.

Water is supplied by four steam-driven crank and fly-wheel pumps, and 1 motor-driven centrifugal pump. The Michigan is the most powerful of the former type, with a capacity of 60,000,000 gallons in 24 hours. The Arcadian, Ontario, and Huron have a capacity of 20,000,000 gallons each and the centrifugal pump of 2,750,000 gallons in 24 hours or a total of 122,750,000 gallons of water in 24 hours.

Boiler Plant.

The old boiler plant consists of 22 locomotive boilers, of which 14 are in constant use. There are five 500, thirteen 300, and fourteen 250 horse-power boilers, making a total generating capacity of 7,400 horse-power.

A new boiler plant of 10,000 horse-power of Babcock and Wilcox boilers will shortly go into operation.

The daily coal consumption averages 240 tons, and 500,000 gallons of water per day are used in these boilers, coming from reservoirs, artesian wells, and Torch Lake.

The buildings are built of steel with corrugated-iron sides, Carey roofing, and cement floors resting on concrete foundations.

Electric Power Plant.

The boiler house at the stamp mills also furnishes steam for the Electric Power Plant of 8,000 kilowatts capacity. There are three 2,000-kilowatt General Electric generators direct connected to three Leavitt 3-cylinder compound engines running at 107 revolutions per minute and generating current at 13,200 volts potential, also two 1,000-kilowatt General Electric generators, one direct connected to an Allis-Chalmers twin steeple-compound engine, the other connected by a rope drive to a Leavitt triple-expansion engine, both generating at a pressure of 440 volts. All are alternating-current, 25-cycle machines.

This electric power is used to drive all stamp-mill machinery and the sand wheels, and is transmitted to the mine at a potential of 13,200 volts, where it is stepped down to 2,300 volts, and used to drive the rock-house and shop machinery and for mine pumping and lighting purposes.

§ 1510. MILL NO. 178. BALTIC MINING COMPANY, COPPER RANGE CONSOLIDATED COMPANY, BALTIC, MICHIGAN. — This mill,[49] located at Redridge, on Lake Superior, has a capacity of 2,600 tons per 24 hours and is divided into four sections, each section having one stamp and handling 650 tons of rock per day. The mill building is of structural steel on stone foundations and is 195 feet long by 175 feet wide.

The principal rock is native arsenical copper in an amygdaloid to which the mine has given its name.[167] Narrow fissure veins, crossing the lode, carry a little melaconite which is saved in milling. The problem is to save the copper values.

The following is a description of a 1-stamp section. Rock from the mine goes to (1).

1. Nordberg steeple-compound steam stamp having a 20 × 24-inch cylinder and capable of crushing 650 tons of rock per 24 hours through a screen with 0.625-inch holes. From the mine; delivers pulp to (2) and the heavier mineral, removed from the mortar by a hydraulic discharge, goes to (33).

2. Hydraulic classifier with a 0.25 × 0.625-inch spigot. From (1) and (5); delivers spigot to (33) and overflow to (3).

3. Two trommels, 3 × 6 feet, with screens having 0.25-inch holes and a life of about 6 weeks. From (2); deliver oversize to (4) and undersize to (6).

4. Ten-inch elevator with an 8-ply rubber belt having 46 malleable-iron buckets, 4.5 × 7 inches, set 18 inches apart. From (3); delivers to (5).

5. Sturtevant rolls, 6 × 36 inches, having open-hearth steel shells with a life of 6 months. From (4); deliver crushed rock to (2).

6. Six Richards-Coggin 4-spigot classifiers with 0.75-inch spigots. From (3); deliver first spigots to (7), second spigots to (8), third spigots to (9), fourth spigots to (10), and overflows to (22).

7. Hodge jig. From (6); delivers discharge to (33), hutch product to (15), and tailings to (11).

8. Hodge jig. From (6); delivers skimmings to (33), hutch product to (15), and tailings to (12).

9. Hodge jig. From (6); delivers skimmings to (33), hutch product to (15), and tailings to (13).

10. Hodge jig. From (6); delivers skimmings to (33), hutch product to (15), and tailings to (14).

11. Hodge jig. From (7); delivers discharge to (30), hutch product to (16), and tailings to (34).

12. Hodge jig. From (8); delivers discharge to (30), hutch product to (16), and tailings to (34).

13. Hodge jig. From (9); delivers skimmings to (33), hutch product to (16), and tailings to (34).

14. Hodge jig. From (10); delivers skimmings to (33), hutch product to (16), and tailings to (34).

15. Settling tank with 2 spigots. From (7), (8), (9), and (10); delivers spigots to (17) and overflow of clear water.

16. Settling tank with 2 spigots. From (11), (12), (13), and (14); delivers spigots to (18) and overflow of clear water.

17. Two Wilfley tables. From (15); deliver concentrates to (33), middlings to (19), and tailings to (34).

18. Two Wilfley tables. From (16); deliver concentrates to (33), middlings to (19), and tailings to (34).

19. Hodge 2.5-inch centrifugal pump. From (17), (18), (21), and (32); delivers to (20).

20. Settling tank with 2 spigots. From (19); delivers spigots to (21) and overflow of clear water.

21. Two Wilfley tables. From (20); deliver concentrates to (33) and tailings to (19).

22. Open-hearth crucible-steel screen with 0.125-inch round holes for removing wood pulp. Life 1 year. From (6); delivers undersize to (23) and oversize to waste.

23. Settling tank with 4 spigots 0.5 inch in diameter. From (22); delivers spigots to (24) and overflow to (25).

24. Four Deister tables. From (23); deliver concentrates to (33), middlings to (27), and tailings to (34).

25. Settling tank with 8 spigots 0.5 inch in diameter. From (23), (28), (29), and (31); delivers spigots to (26) and overflow to (34).

26. Eight Deister tables. From (25); deliver concentrates to (33), middlings to (27), and tailings to (34).

27. Hodge 2.5-inch centrifugal pump. From (24) and (26); delivers to (28).

28. Settling tank with 3 spigots. From (27); delivers spigots to (29) and overflow to (25).

29. Three Deister tables. From (28); deliver concentrates to (33) and tailings to (25).

30. One 6-foot Huntington mill having a capacity of 40 tons per 24 hours through a 1-millimeter screen. From (11) and (12); delivers pulp to (31).

31. Settling tank with 4 spigots. From (30); delivers spigots to (32) and overflow to (25).

32. Four Overstrom tables. From (31); deliver concentrates to (33), middlings to (19), and tailings to (34).

33. Mineral or concentrates bin. From (1), (2), (7), (8), (9), (10), (13), (14), (17), (18), (21), (24), (26), (29), and (32); delivers, via cars, to smelter.

34. General tailings-launder. From (11), (12), (13), (14), (17), (18), (24), (25), (26), and (32); delivers to dump. The discharge of this launder is 25 feet above mean water datum and provides for the dumping of many million tons of tailings by gravity alone.

The mill operates 2 shifts per 24 hours for 6 days a week and makes an 80% extraction in a product running from 35 to 45% copper which smelts readily with the native copper mineral. The general mill tailings run 0.28% in copper.

Power.

Power is supplied by a compound-condensing Corliss engine. The boiler plant adjoins the mill and is 90 feet long by 55 feet wide. It has a steel frame and stone foundations and its equipment consists of five 250 horse-power Stirling water-tube boilers and a Green fuel-economizer. Draft for the boilers is furnished by a set of duplex fans driven by the mill engine.

The mill is heated by a vacuum exhaust-steam system.

Water.

Water for the mill is furnished through a 38-inch riveted steel pipe coming from an impounding dam across the mouth of the Salmon Trout River. The dam has 1,000,000 pounds of steel and 8,000 cubic yards of concrete work and impounds about 1,250,000,000 gallons of water. At the river's lowest stage, enough water can be furnished to wash 5,000 tons of rock per 24 hours.

§ 1511. MILL NO. 179. CHAMPION STAMP MILL OF THE COPPER RANGE CONSOLIDATED COMPANY, PAINESDALE, MICHIGAN.[39] — This mill,[49] located at Freda, two miles west of Redridge, is built of steel and concrete and has a capacity of 3,900 tons per 24 hours. The economic mineral is native copper which it becomes the problem to save.[169]

The mill is divided into six sections and one of the first four is described below, the fifth and sixth being referred to later. The rock, broken at the mine to 6-inch cubes, is delivered by cars to (1).

1. Bin, 18 feet wide by 27 feet deep at the lowest point and rock filled. The slope of the bottom is about 40°. From the mine via cars; delivers to (2).

2. Feed chute, 8 feet long and sloping about 8 inches to the foot. Water is added and copper nuggets and sticks are picked out. From (1); delivers copper nuggets to (23), milling rock to (3), and sticks to waste.

3. Nordberg simple-cylinder steam stamp crushing through a 0.625-inch hole with a capacity of 650 tons per 24 hours when no oversize is returned, or 500 tons per 24 hours if the oversize is returned. The mortars are circular and provided with screens about 2.5 feet high having 0.625-inch round holes. The foundations are made of concrete and are 20 × 20 × 32 feet deep. A Krause mortar discharge enters 4 inches below the bottom of the screens and removes the larger nuggets. The water pipe is 4 inches in diameter and the discharge pipe 6 inches in diameter at the upper end and 7 at the lower. From (2) and (11); delivers mineral to (23) and pulp to (4).

4. Hydraulic discharge. A hopper-shaped box, 1 foot square at the top

and 16 inches deep, with a discharge pocket 20.5 inches square and 29 inches deep which is located below. A 3-inch pipe, 8 inches long, connects the hopper and pocket. Hydraulic water enters through a 1-inch hole in the base of the hopper and comes into the bottom of the pocket, in which there is also a door. From (3); delivers mineral, from 0.25 to 0.625 inch, to (23), and pulp to (5).

5. Two conical trommels, 24 and 40 × 56 inches with 0.25-inch holes, having a speed of 20 revolutions per minute and a slope of 1 inch to the foot. From (4) and (9); deliver oversize to (6) and undersize to (10).

6. Ten-inch elevator with an 8-ply rubber belt, 0.0625 inch thick and reinforced on both sides, having a speed of 175 feet per minute, malleable-iron buckets, 4.5 × 7 inches, set 18 inches apart, and a capacity of from 125 to 150 tons per 24 hours. The buckets have a life of about 6 months and elevate the rock 54 feet. From (5); delivers to (7).

7. Trommel, 2 × 4 feet, with 0.437-inch holes, having a speed of 20 revolutions per minute and a slope of 1 inch to the foot. From (6); delivers oversize to No. 1 and undersize to No. 2 of (8).

8. Two 2-compartment Harz jigs. No. 1 has 28 × 46-inch sieves, 30.5 × 46-inch plunger compartments, and a 6-inch tail apron, while No. 2 has 28 × 42-inch sieves, 30.5 × 42-inch plunger compartments, and a 4.5-inch tail apron. All sieves have 3-millimeter round holes and the height of tailings discharge is 5 inches in both cases. From (7), No. 1 is fed with 0.625 to 0.437-inch material and No. 2 with 0.437 to 0.25-inch material; deliver mineral to (23), middlings to (9), and tailings to (22).

9. Allis-Chalmers rolls, 10 × 36 inches, making 175 revolutions per minute and having a capacity of from 125 to 150 tons per 24 hours. One roll is in a fixed bearing and the other has an adjustable sliding bearing making it rigid. The shells have a life of from 6 to 7 months. One set serves two sections. From (8); deliver crushed rock to (5).

10. Six Richards-Coggin hydraulic classifiers, 1 × 1 × 1.25 feet long, with four 0.75-inch spigots each. The first and second spigots have 1.25-inch hydraulic water pipes and the third and fourth 1 inch. One classifier is used before each gang of 4 jigs in (11), and the tailings from the first set of 4 jigs in (11) go to the second classifier, etc. From (5); deliver spigots to (11) and overflows to (18).

11. Twenty-four Hodge jigs arranged in six sets of 4 jigs each and each set treats the classified tailings from the preceding set. These are the Charles Hodge accelerated jigs of two compartments each and have a graduated adjustable speed, and plungers to work simultaneously or in pairs, there being 2 eccentrics on each plunger. The net screen area is 22 inches wide by 36 inches long while the apron between is 22 inches wide by 28 inches long. Ten-mesh screens are used on the coarsest jigs and mineral is cleaned off four times a day. From (10); deliver skimmed mineral from first compartments to (23), skimmed middlings from second compartments either to (3) or (12), hutch products from both compartments to (13), and tailings from the last set of 4 jigs to (22).

12. One 6-foot Chili mill having 1 × 12.7-millimeter punched-slot screens, a speed of 50 revolutions per minute, and a capacity of 40 tons per 24 hours. The shells have a life of from 6 to 8 months and the ring dies 1 year. From (11); delivers pulp to (13).

13. Two V-shaped settling boxes about 2 × 3 feet. From (11) and (12); deliver spigots to (14) and overflows to (22).

14. Four Overstrom tables, 6.5 feet wide by 15 feet long, with corners at about 60° and 120°. There are 72 riffles 1.75 inches between centers. The tables have a feed and water distributor, the latter 7.33 feet long. Water is fed onto the tables through twenty 0.4-inch holes set 4 inches apart and the

amount is regulated by small wedges. From (13); deliver mineral to (23), middlings to (15), and tailings to (22).

15. One 2.5-inch centrifugal pump having a speed of 750 revolutions per minute, a lift of 15 feet, and a life of 5 months. From (14); delivers to (16).

16. V-shaped slimes tank, 5.42 feet wide by 5.17 feet deep in the center and 2.67 feet at the edges. From (15) and (17); delivers spigot to (17) and overflow to (22).

17. One Overstrom table in detail like (14). From (16); delivers mineral to (23); middlings via elevator, to (16); and tailings to (22).

18. One double slimes-tank composed firstly of a screen box, 2.75 × 10 feet, with 0.188-inch holes to remove chips, etc.; next comes the first settling box made of 3-inch plank, 5 by 7.5 by about 5 feet deep; finally there is the second W-shaped settling box, 15 feet long by 16 feet wide, with a distributor having 8 partitions at the feed end. The first two tables in (19) are fed from the first settling box and the last four from the second. From (10); delivers spigots to (19) and overflow to (22).

19. Six Overstrom tables in detail like (14). From (18); deliver mineral to (23), middlings to (20), and tailings to (22).

20. Slimes tank. From (19) and (21); delivers spigot to (21) and overflow to (22).

21. One Overstrom table in detail like (14). From (20); delivers mineral to (23); middlings, via elevator, to (20); and tailings to (22).

22. Tailings launder. From (8), (11), (13), (14), (16), (17), (18), (19), (20), and (21); delivers into Lake Superior.

23. W-shaped mineral bin. From (2), (3), (4), (8), (11), (14), (17), (19), and (21); delivers, via gates, chutes, and cars, to smelter.

About 20% of the total feed goes to the tables. In 1903 the stamps crushed 42 tons of ore for each ton of coal burned, and in 1905 it cost about 7.5 cents to make a pound of metallic copper at this plant. The tailings average about 0.335% copper and a recovery of 76% is made. The mill is heated by an exhaust-steam vacuum system draining to a vacuum pump located in the boiler house.

Two shifts are operated in the mill and three in the boiler house per 24 hours, and the mill runs 6 days a week.

Power.

The steel boiler house has five 200 and four 225 horse-power Springfield boilers of Scotch type. It is furnished with a Green fuel-economizer, Detroit automatic stoker, and Sturtevant blower. Coal is delivered to the boilers by gravity and the ashes are delivered, through a launder by means of water, into Lake Superior. All exhaust steam, except that used for heating purposes, passes through jet condensers into a hot well from which water is fed into the boilers at high temperatures.

A 500 horse-power, 14 × 32 × 30-inch, cross-compound engine running at 125 revolutions per minute furnishes power to the mill.

Water.

There is a 40 × 60-foot steel pump-house with a truss roof and traveling crane which houses a 2,000,000-gallon triple-expansion Nordberg pump. Water for the mill and boilers comes from a shore well, located 8 feet below the level of Lake Superior, through a tunnel 1,020 feet long. In 1903 water cost about 1.5 cents per ton of rock stamped, which is less than the average for the district.

In the fifth and sixth sections equipped with steeple-compound stamps,

which take the place of the experimental roller plant described later, four gangs of Woodbury jigs, 4 to each gang, have been installed in order to handle a very large proportion of fine material previously lost. The Deister tables are also used and are giving excellent results; there are 4 finisher tables, 4 tables for re-ground middlings, 2 for middlings from finisher and Chili mill tables, and 14 slimes tables per head, and it is expected that the tailings from these two sections will be from 0.10 to 0.15 of 1% less than those made by the first four sections in the mill.

This practice will undoubtedly supersede that of the first four heads installed. In the old practice the jigging of oversize for the production of middlings to re-grind, and the slimes table and tank arrangement is productive of a heavy loss in the tailings.

The Champion Rolls Mill of the Copper Range Consolidated Company, Painesdale, Michigan.

The capacity of this mill was 350 tons per 24 hours, but after experimenting for some time with this plant on graded crushing, all hope of making this method of treatment a success was given up and the fifth and sixth sections of the stamp mill take its place.

F. W. Denton,[49] general manager, says: "The main difficulty was that the rolls did not crush the material fine enough to liberate the finer particles of copper, so that the extraction was not as good as with the steam stamps, being about 66% as against 76%. We also found that the horse-power required was a little less than with the steam stamps but, if credit is given the steam stamps for doing much more breaking, that is, producing finer material, the question of power is rather in favor of the stamps. Furthermore, the character of the material from the rolls was such that jigging required a much longer time to make the proper separation. The material was in the form of flakes rather than round and smooth as with the stamps."

This is a flow sheet to show "what not to do." Rock from the mine was delivered to (1).

1. Shaking grizzly with 1-inch spaces between the bars. From the mine and (9); delivers oversize to (2) and undersize to (3).
2. No. 5 gyratory breaker. From (1); delivers to (3).
3. Elevator. From (1), (2), (11), and (13); delivers to (4).
4. Trommel, 3 × 6 feet, with 0.875-inch holes. From (3); delivers oversize to (9) and undersize to (5).
5. Trommel, 3 × 6 feet, with 0.563-inch holes. From (4); delivers oversize to (12) and undersize to (6).
6. Trommel, 3 × 6 feet, with 0.375-inch holes. From (5); delivers oversize to (14) and undersize to (7).
7. Trommel, 3 × 6 feet, with 0.125-inch holes. From (6); delivers oversize to (14) and undersize to (8).
8. Hydraulic discharge. From (7); delivers spigot to (14) and overflow to (21).
9. Trommel, 3 × 6 feet, with 2-inch holes. From (4); delivers oversize to (1) and undersize to (10).
10. Jig with 1 compartment. From (9); delivers mineral to (23) and tailings to (11).
11. Anaconda rolls, 15 × 40 inches. From (10); deliver rock, crushed to 0.25 inch, to (3).
12. Jig with 2 compartments. From (5); delivers mineral to (23) and tailings to (13).

13. Rigid rolls, 10 × 36 inches. From (12); deliver rock, crushed to 0.125 inch, to (3).

14. Three Harz jigs with 2 compartments. All sieves 30 × 40 inches. From (6), (7), and (8); deliver hutches, as mineral, to (23), middlings to (15), and tailings to waste.

15. Rigid rolls, 10 × 36 inches, set close. From (14); deliver crushed rock to (16).

16. Classifier with 4 spigots. From (15); delivers spigots to (17) and overflow to (21).

17. Four 3-compartment jigs. From (16); deliver skimmed mineral from first two compartments, and hutches, as mineral, from first two compartments to (23), middlings to (18), and tailings to waste.

18. One 6-foot Huntington mill. From (17); delivers pulp, crushed through a 1-millimeter screen, to (19).

19. Settling tank. From (18) and (20); delivers spigot to (20) and overflow to waste.

20. Four Overstrom tables. From (19); deliver mineral to (23); middlings, by elevator, to (19); and tailings to waste.

21. Settling tank. From (8), (16), and (22); delivers spigot to (22) and overflow to waste.

22. Two Overstrom tables. From (21); deliver mineral to (23); middlings, by elevator, to (21); and tailings to waste.

23. Mineral bin. From (10), (12), (14), (17), (20), and (22); delivers, via gates, chutes, and cars, to smelter.

The tables got about 11% of the total tonnage treated.

§ 1512. MILL NO. 180. THE TRIMOUNTAIN MINING COMPANY, COPPER RANGE CONSOLIDATED COMPANY, TRIMOUNTAIN, MICHIGAN.[49] — The mill of this company is situated at Beacon Hill, two miles west of Redridge.[110] Together with the pump and boiler houses it occupies a 133.5-acre mill site which has a mile frontage on Lake Superior. The mill building, 210 feet long and 178 wide, is constructed of steel and has stone foundations. It contains 4 Nordberg steeple-compound stamps for crushing the rock, and a complete equipment of jigs, classifiers, tables, etc., to concentrate the crushed rock.[176] The pump house is built of Portage-entry sandstone and has a steel trussed roof. The rock treated is the Baltic amgydaloid containing the economic mineral native copper. The problem is to save the copper.

Only one of the four similar stamp sections will be described below. Rock from the mine is delivered to (1).

1. Stamp feeder. Receives rock from the mine broken to 3.5 inches and finer, and delivers 525 tons of rock per 24 hours, together with 12,150 gallons of water, to (2).

2. One Nordberg steeple-compound stamp provided with a hydraulic mortar-discharge and a 2-way screen discharge. The cylinders are 15.5 and 32 inches in diameter and the piston makes 104 24-inch strokes per minute. It crushes 653 tons of rock per 24 hours through 0.625-inch round holes punched staggered, with 0.875 inch between centers, in open-hearth, high-carbon steel plate, 0.1875 inch thick. These plates, when tempered, have an average life of 218.40 days and, when untempered, of 77.75 days.

The weight of moving parts, going into the blow, is 7,860 pounds, which is made up as follows: Low-pressure piston, 1,115 pounds; high-pressure piston, 400 pounds; distance sleeve, 480 pounds; piston rod, 775 pounds; stamp shaft bonnet, 445 pounds; stamp shaft, 3,800 pounds; and chilled cast-iron shoe, 845 pounds. The mortar and anvil blocks weigh 100 tons and are on concrete foundations. This requires 262 indicated horse-power, and 76,845 gallons of

water per 24 hours in addition to 129,984 gallons per 24 hours in the hydraulic discharge. Weight and life of mortar linings and wear per ton of rock stamped are as follows:

	Weight New Pounds.	Weight Old Pounds.	Life in Days.	Pounds Worn off per Ton of Rock Crushed.
Hopper liners, hard cast iron	600.0	197.0	195.9	0.0039
Urn " " " "	225.0	102.0	58.4	0.0041
Top " " " "	487.0	280.0	201.8	0.0020
Grate frames, gray " "	1,749.0	384.0	137.3	0.0193
Stave liners, chilled " "	2,826.0	1,809.0	344.5	0.0057
Mortar dies " " "	798.0	415.0	222.0	0.0034
Stamp shoes, " " "	846.0	499.0	12.7	0.0534
Stamp shaft, acid open-hearth steel	3,800.0	2,903.0	626.0	0.0016

From (1), (4), and (28); delivers mortar discharge as No. 1 mineral; and pulp from screen discharge, via 2 launders, to (3).

3. Two single-spigot hydraulic classifiers having 0.625-inch holes. Each handles 326.5 tons of rock and requires 57,549 gallons of hydraulic water per 24 hours. From (2); deliver spigots as No. 1 mineral; and overflows to (4).

4. Two conical trommels having 0.25-inch round holes, punched staggered, 0.406 inch between centers, in open-hearth, high-carbon steel plate, 0.0625 inch thick. This plate has an average life, when tempered, of 71.3 days; when untempered, of 59.8 days; and when of rolled saw-plate, of 104 days. From (3); deliver 128 tons per 24 hours of oversize running 0.32% in copper, via elevator, to (2) and undersize to (5).

5. Two single-spigot hydraulic classifiers with 0.25-inch holes. From (4); deliver spigots, as No. 1 mineral; and overflow to (6).

6. Six 4-spigot hydraulic classifiers. The first two spigots are of 0.75-inch pipe and the last two of 0.5-inch pipe; the first and third being worn while the second and fourth are new. Two hundred and eighteen thousand six hundred and thirty-four gallons of hydraulic water per 24 hours are added to the first spigots and 19,084 gallons of water are discharged with the pulp; 267,078 gallons of hydraulic water are added to the second spigots per 24 hours and 19,278 gallons of water are discharged with the pulp. One hundred and eighty-seven thousand six hundred and ninety-eight gallons of hydraulic water per 24 hours are added to the third spigots and 14,933 gallons of water are discharged with the pulp. One hundred and sixty-eight thousand one hundred and seventy-four gallons of hydraulic water per 24 hours are added to the fourth spigots and 8,042 gallons of water are discharged with the pulp. Handle 525 tons of rock. The first spigots discharge 132 tons per 24 hours which runs 1.84% in copper and represents a loss of 0.28%, the second spigots discharge 96 tons per 24 hours which runs 0.83% in copper and represents a loss of 0.26%, the third spigots discharge 54 tons per 24 hours which runs 0.73% in copper and represents a loss of 0.25%, the fourth spigots discharge 36 tons per 24 hours which runs 0.63% in copper and represents a loss of 0.20%, and the overflows carry 207 tons of rock per 24 hours. From (5); deliver the first spigots to (7), second spigots to (8), third spigots to (9), fourth spigots to (10), and overflows to (15) and (21).

7. Six 2-compartment Hodge jigs with brass wire-cloth sieves, 24 × 36 inches. The head sieves of 8 mesh, 18 wire, and 3 inches deep have a life of 324 days. The tail sieves, of 10 mesh, 20 wire, and 3 inches deep, have a life of 405 days. The plungers, 12 × 36 inches, make 160 strokes per minute. The length of stroke in the head sieves is 1 inch and in the tail sieves 0.875 inch. The head sieves require 138,636 gallons and the tail sieves 113,328 gallons of water per 24 hours. From (6); deliver 6.96 tons from (7), (8), (9), and (10)

of discharges per 24 hours, running 2.1% in copper, as "raggings," to (28); 24.12 tons of hutch products running 1.83% in copper, representing a loss of 0.57%, and 23,549 gallons of water per 24 hours, to (11); and tailings to (26).

8. Six 2-compartment Hodge jigs with brass wire-cloth sieves, 24 × 36 inches. The head sieves of 10 mesh, 20 wire, and 3 inches deep, have a life of 405 days. The tail sieves, of 12 mesh, 21 wire, and 3 inches deep, have a life of 540 days. The plungers, 12× 36 inches, make 160 strokes per minute. The length of stroke in the head sieves is 0.875 inch and in the tail sieves 0.8125 inch. The head sieves require 130,692 gallons and the tail sieves 113,112 gallons of water per 24 hours. From (6); deliver discharges, as raggings, to (28); 31.68 tons of hutch products running 0.61% in copper, representing a loss of 0.31%, and 23,059 gallons of water per 24 hours, to (12); and tailings to (26).

9. Six 2-compartment Hodge jigs with brass wire-cloth sieves, 24 × 36 inches. The head sieves, of 12 mesh, 21 wire, and 3 inches deep, have a life of 540 days. The tail sieves, of 14 mesh, 22 wire, and 3 inches deep, have a life of 260 days. The plungers, 12 × 36 inches, make 160 strokes per minute. The length of stroke in the head sieves is 0.8125 inch and in the tail sieves 0.75 inch. The head sieves require 138,120 gallons and the tail sieves 114,450 gallons of water per 24 hours. From (6); deliver discharges, as raggings, to (28); 25.80 tons of hutch products running 1.82% in copper, representing a loss of 0.79%, and 23,336 gallons of water per 24 hours, to (13); and tailings to (26).

10. Six 2-compartment Hodge jigs with brass wire-cloth sieves, 24 × 36 inches. The head and tail sieves, of 14 mesh, 22 wire, and 3 inches deep, have a life of 260 days. The plungers, 12 × 36 inches, make 160 strokes per minute. The length of stroke in the head sieves is 0.689 inch and in the tail sieves 0.625 inch. The head sieves require 90,276 gallons and the tail sieves 80,610 gallons of water per 24 hours. From (6); deliver discharges, as raggings, to (28); 11.16 tons of hutch products running 0.28% in copper, representing a loss of 0.26%, and 22,529 gallons of water per 24 hours, to (14); and tailings to (26).

11. Two 3-compartment Hodge jigs with brass wire-cloth sieves, 24 × 36 inches. The head sieves, of 10 mesh, 20 wire, and 2.75 inches deep, have a life of 405 days. The middle and tail sieves, of 12 mesh, 21 wire, and 2.75 inches deep, have a life of 540 days. The plungers, 12 × 36 inches, make 160 strokes per minute. The length of stroke in the head sieves is 0.875 inch, in the middle sieves 0.689 inch, and in the tail sieves 0.625 inch. The head sieves require 46,126 gallons, the middle sieves 29,282 gallons, and the tail sieves 40,252 gallons of water per 24 hours. From (7), via 2 hydraulic classifiers which require 23,740 gallons of hydraulic water per 24 hours and deliver 0.78 ton of mineral running 75.8% in copper with 4,885 gallons of water per 24 hours; deliver 1.62 tons of material on the head sieves and discharges as No. 2 mineral running 85.5% in copper; 0.30 ton of material on the middle sieves, as No. 4 mineral running 56.7% in copper; 0.44 ton of material on tail sieves, as sand running 8.3% in copper, to (23); and tailings to (26).

12. Two 3-compartment Hodge jigs with brass wire-cloth sieves, 24 ×36 inches. The head and middle sieves, of 12 mesh, 21 wire, and 2.75 inches deep, have a life of 540 days. The tail sieves of 14 mesh, 22 wire, and 2.75 inches deep, have a life of 260 days. The plungers, 12 × 36 inches, make 160 strokes per minute. The length of stroke in the head sieves is 0.75 inch and in the middle and tail sieves 0.625 inch. The head sieves require 52,258 gallons, the middle sieves 42,326 gallons, and the tail sieves 33,860 gallons of water per 24 hours. From (8); deliver 0.16 ton of material on head sieves as No. 2 mineral running 56.5% in copper; 0.12 ton of material on middle sieves as No. 4 mineral running 28.2% in copper; 0.26 ton of material on tail sieves, as sand running 6.5% in copper, to (23); and tailings to (26).

13. Two 3-compartment Hodge jigs with brass wire-cloth sieves, 24 × 36 inches, of 14 mesh, 22 wire, and 2.75 inches deep, having a life of 260 days. The plungers, 12 × 36 inches, make 160 strokes per minute. The length of stroke in the head sieves is 0.625 inch, in the middle sieves 0.563 inch, and in the tail sieves 0.5 inch. The head sieves require 44,916 gallons, the middle sieves 50,876 gallons, and the tail sieves 32,306 gallons of water per 24 hours. From (9); delivers 0.12 ton of material on head sieves per 24 hours, as No. 4 mineral running 59.8% in copper; 0.12 ton of material on middle sieves per 24 hours as No. 4 mineral running 49.8% in copper; 0.30 ton of material on tail sieves per 24 hours, as sand running 6.0% in copper, to (23); and tailings to (26).

14. Two 3-compartment Hodge jigs with brass wire-cloth sieves, 24 × 36 inches. The head and middle sieves, of 14 mesh, 22 wire, and 2.75 inches deep, have a life of 260 days. The tail sieves, of 16 mesh, 24 wire, and 2.75 inches deep, have a life of 230 days. The plungers, 12 × 36 inches, make 160 strokes per minute. The length of stroke in the head and middle sieves is 0.563 inch and in the tail sieves 0.5 inch. The head sieves require 35,414 gallons, the middle sieves 43,706 gallons, and the tail sieves 41,806 gallons of water per 24 hours. From (10); deliver 0.12 ton of material on head sieves per 24 hours as No. 4 mineral running 18.7% in copper; 0.08 ton of material on middle sieves per 24 hours, as sand running 8.2% in copper, to (23); 0.16 ton of material on tail sieves per 24 hours, as sand running 8.6% in copper, to (23); and tailings to (26).

15. V-shaped settling tank. From (6). Fifty-eight thousand six hundred and sixty-two gallons of hydraulic water per 24 hours are added and go to (15) and (21). Delivers 20 tons running 0.74% in copper and 54,232 gallons of water in the pulp, via plug discharges, per 24 hours, to the upper decks of (16); 22 tons running 0.63% in copper and 49,478 gallons of water in the pulp, via plug discharges, per 24 hours, to the lower decks of (16); and 101.5 tons running 0.33% in copper, as overflow, to (26).

16. Two double-decked round tables, 17.5 feet in diameter, making 1 revolution per minute and sloping 1.25 inches to the foot. They also have spreaders which are 7 feet in diameter and have a slope of 1.5 inches per foot. They require 23,172 gallons of clear water on the upper decks and 23,172 gallons of clear water on the lower decks per 24 hours, besides 15,494 gallons of jet water to each deck. From (15); deliver concentrates to (17) and 22.5 tons of tailings per 24 hours, running 0.25% in copper, to (25).

17. Centrifugal pump with a 2.5-inch discharge, and a fan 14.5 inches in diameter, making 700 revolutions per minute for a 20-foot lift and 500 revolutions per minute for a 15-foot lift. Handles about 30 tons of material with 10% solids per 24 hours. A hard cast-iron lining lasts 6 months and a chilled cast-iron fan 12 months. (17), (20), and (24) require 36,678 gallons of clear water per 24 hours for the arbors. From (16), (22), and (25); delivers to (18).

18. Distributing box. From (17); delivers to (19).

19. Two Wilfley tables. Receive 27.2 tons per 24 hours from (18) running 1.38% in copper and carrying 60,647 gallons of water. This represents a loss of 0.62%. Require 35,325 gallons of wash water per 24 hours. Deliver 0.58 ton of concentrates per 24 hours running 30.5% in copper as No. 5 mineral with 2,534 gallons of water; and about 27 tons of tailings per 24 hours, running 0.62% in copper and carrying 66,266 gallons of water, to (20).

20. Centrifugal pump with details as in (17). From (19); delivers to (21).

21. V-shaped settling tank. From (6) and (20); delivers 11.5 tons running 0.66% in copper, and 49,607 gallons of water in the pulp, via plug discharges, per 24 hours, to the upper deck of (22); 18.0 tons running 0.59% in copper and

55,346 gallons of water in the pulp, via plug discharges, per 24 hours, to the lower deck of (22); and overflow to (26).

22. One double-decked round table with details as in (16). It requires 11,586 gallons of clear water on the upper deck and 11,586 gallons of clear water on the lower deck per 24 hours, besides 15,494 gallons of jet water for each deck. From (21); delivers concentrates to (17) and 12.82 tons of tailings per 24 hours, running 0.22% in copper, to (25).

23. Two 2-compartment Hodge jigs with brass wire-cloth sieves, 24 × 36 inches. The head sieves, of 14 mesh, 22 wire, and 2.75 inches deep, have a life of 260 days. The tail sieves, of 16 mesh, 24 wire, and 2.75 inches deep, have a life of 230 days. The plungers, 12 × 36 inches, make 160 strokes per minute. The length of stroke in the head sieves is 0.625 inch and in the tail sieves 0.563 inch. The feed hoppers require 41,436 gallons, the head sieves 48,320 gallons, and the tail sieves 44,300 gallons of water per 24 hours. From (11), (12), (13), (14), and (27); deliver material on sieves and discharges as Nos. 2 and 3 mineral; and tailings to (24).

24. Centrifugal pump with details as in (17). From (23); delivers to (29).

25. Three settling tanks to be used when Wilfley tables (19) are not run. From (16) and (22); deliver settlings to (17) and overflow to No. 2 catch basin or to (26).

26. General tailings launder. From (7), (8), (9), (10), (11), (12), (13), (14), (15), (21), (25), (27), and (29); delivers to dump.

27. Settling tanks. From overflow of mineral and rejigging sand-tanks; delivers 4.41 tons per 24 hours, as plug discharges, running 1.94% in copper to (23) and overflows to (26).

28. No. 1 catch basin. From (7), (8), (9), and (10); delivers "raggings" to (2).

29. One Wilfley table. From (24); delivers concentrates as mineral; and tailings to (26).

Following is a sizing test of the material from the stamp mortar with 0.625-inch round holes in the mortar screens:

On 5 Mesh. Percent.	Through 5 Mesh, on 10. Percent.	Through 10 Mesh, on 20. Percent.	Through 20 Mesh, on 40. Percent.	Through 40 Mesh, on 60. Percent.	Through 60 Mesh, on 100. Percent.	Through 100 Mesh. Percent.
44.5	11.1	7.0	6.2	4.8	3.0	22.2

Percentage of the various grades of mineral in the mill returns:

Barrel work or mass copper		6.5	percent.
Number 1 hutch or mortar discharge		12.7	"
" 1 discharge	0.625-inch	10.7	"
" 1 "	rough jigs	16.7	"
" 2 "	finisher jigs	21.9	"
" 3 "	slimes copper	31.5	"

In 1905, 570,613 tons of rock were stamped yielding 10,476,462 pounds of fine copper, or 18.36 pounds copper per ton of rock. The cost of production was 10.5 cents per pound for ordinary expenses and 10.93 cents including construction expenses. The cost of mining, stamping, dressing, etc., was $1.59 per ton of rock for ordinary working expenses and $1.67 per ton including construction expenses.

The most of the figures on water quantities and capacities of the various machines as shown in the above flow sheet were obtained in 1905. Since that time rolls have been installed for re-crushing, changing the conditions somewhat throughout the mill.

The mill operates two shifts per day and 6 days a week. The average cost

per ton of rock stamped during 1907 was 20.05 cents; 49.66% of which was for labor, 2.32% for stamp shoes, 1.10% for oils and waste, 38.49% for coal, and 8.43% for all other supplies.

Pumping costs were 1.94 cents per ton of rock stamped. 41.32 tons of rock were stamped per ton of coal burned. 22.78 tons of rock were stamped per man per day.

Power and Water.

Six 250 horse-power Stirling water-tube boilers and a Green economizer, housed in a separate building of stone and steel, supply power to the mill. These boilers are run at a pressure of 175 pounds per square inch. Draft for the boilers is furnished by a brick-lined self-supporting steel smoke-stack, 7.5 feet in diameter and 165 feet high.

There is a Nordberg pump handling 20,000,000 gallons per 24 hours. It takes feed water, for the regular operations, through a 40-inch riveted steel pipe, 1,400 feet long, from an intake crib in Lake Superior. On Sundays or days of inactivity, feed water is pumped from a small stream which is dammed about 1,000 feet away. The pumps for fire protection and for domestic purposes are also served from this stream. By actual measurement the amount of water required by the mill in 1905, as shown in the flow sheet, was 3,038,954 gallons per 24 hours.

§ 1513. MILL NO. 181. OSCEOLA MILL, OSCEOLA CONSOLIDATED MINING COMPANY, OPECHEE, MICHIGAN. — This mill,[28] having a total capacity of 5,250 tons per 24 hours, was built in two sections, the first, completed in 1899, contains 3 steam stamps and the second, completed in 1902, contains 4 steam stamps. Each section is divided into units, there being one complete unit for each stamp. The capacity of each unit is 750 tons per 24 hours. The cost of milling per ton is only 16.95 cents. The rock treated is a cupriferous amygdaloid and the economic mineral is native copper.[173] The problem is to recover the copper.

The rock, after being crushed in the rock houses at the mine, is delivered to (1).

1. Cars of 40 tons capacity. From the rock houses; deliver to (2).

2. Seven mill bins each having a capacity of 450 tons. From (1); deliver to (3).

3. Seven feed aprons. From (2); deliver hand-picked nuggets to smelter and milling rock to (4).

Only one unit described from here.

4. Compound steam stamp, 15.5 and 32 × 24 inches. It has a round mortar with vertical circular screens, 54 inches in diameter, having 0.625-inch round holes. Handles 750 tons per 24 hours. From (3); delivers nuggets to (5) and pulp to (6).

5. Mortar discharge with a 4-inch round opening. The product runs 96.0% in copper and represents 7.4% of the values recovered. From (4); delivers to smelter.

6. Two hydraulic launder discharges. The spigots amount to 14.0% of the values recovered. From (4); deliver spigots, as No. 1 mineral, to (51) and overflows to (7).

7. Two conical trommels, 28 and 40.5 × 60 inches, with 0.1875-inch round holes. From (6); deliver oversize to (8) and undersize to (19).

8. Elevator. From (7), (11), and (12); delivers to (9).

9. Rigid rolls, 16 × 36 inches, made by the Denver Engineering Company, crushing 250 tons per 24 hours and requiring 25 horse-power. The tires, before using, are 3.5 inches thick, and after using, 0.375 inch or less. From (8); deliver crushed rock to (10).

10. Conical trommel with 0.375-inch round holes and other details as in (7). From (9); delivers oversize to (11) and undersize to (12).

11. Double jig with sieves, 2 × 3 feet, with a capacity of 70 tons per 24 hours. The concentrates represent 19.0 percent of the values recovered. From (10); delivers discharges, as No. 1 mineral, to (51), hutch products to (28), and tailings to (8).

12. Conical trommel, 38 and 50.5 × 60 inches, with 0.1875-inch round holes. From (10); delivers oversize to (8) and undersize to (13).

13. Four double classifiers with a capacity of 200 tons per 24 hours. From (12); deliver spigots to (14) and overflows to (17).

14. Four double jigs with sieves, 2 × 3 feet, handling 190 tons per 24 hours. The concentrates represent 5.0% of the values recovered. From (13); deliver discharges, as No. 1 and No. 4 mineral, to (51) and (54), hutch products to (15), and tailings to (55).

15. Two double jigs with sieves, 2 × 3 feet. The concentrates represent 8.0% of the values recovered. From (14) and (17); deliver discharges, as No. 2 mineral, to (52); hutch products, as No. 3 mineral, to (53); and tailings to (16).

16. Double jig with sieves, 2 × 3 feet. From (15); delivers hutch products, as No. 4 mineral, to (54) and tailings to (55).

17. Four settling tanks. From (13); deliver spigots to (15) and overflows to (18).

18. Sand pump. From (17); delivers to (40).

19. Eleven double classifiers with a capacity of 500 tons per 24 hours. From (7) and (50); deliver spigots, amounting to 280 tons per 24 hours, to (20), and overflows, amounting to 220 tons per 24 hours, to (39).

20. Eleven double jigs with sieves, 2 × 3 feet, handling 280 tons per 24 hours. The concentrates represent 7.0% of the values recovered. From (19); deliver discharges, as No. 1 and No. 4 mineral, to (51) and (54), hutch products to (28), and tailings to (21).

21. Eleven double jigs with sieves, 2 × 3 feet. From (20); deliver hutch products to (22) and 235 tons of tailings per 24 hours to (55).

22. Four dewatering boxes handling 16 tons per 24 hours. From (21); deliver rock to (23) and water to (31).

23. Four double jigs with sieves, 2 × 3 feet. From (22); deliver hutch products, as No. 3 mineral, to (53) and tailings to (24).

24. Four dewatering boxes. From (23); deliver rock to (25) and water to (34).

25. Four double jigs with sieves, 2 × 3 feet. From (24); deliver hutch products, as No. 4 mineral, to (54) and tailings to (26).

26. Four dewatering boxes. From (25); deliver rock to (27) and water to (37).

27. Four double jigs with sieves, 2 × 3 feet. From (26); deliver hutch products to (47) and tailings to (55).

28. Four dewatering boxes handling about 22 tons per 24 hours. From (11) and (20); deliver rock to (29) and water to (31).

29. Four hydraulic apron-discharges. The spigots represent 18.0% of the values recovered. From (28); deliver spigots, as No. 2 mineral, to (52) and pulp to (30).

30. Eight double jigs with sieves, 2 × 3 feet. The concentrates represent 8.0% of the values recovered. From (29) and (31); deliver hutch products, as No. 2 mineral, to (52) and tailings to (32).

31. Four dewatering boxes. From (22), (28), and (39); deliver rock to (30) and water to (38).

32. Four dewatering boxes. From (30); deliver rock to (33) and water to (34).

33. Four double jigs with sieves, 2 × 3 feet. From (32) and (34); deliver hutch products, as No. 4 mineral, to (54) and tailings to (35).

34. Four dewatering boxes. From (24) and (32); deliver rock to (33) and water to (38).

35. Four dewatering boxes. From (33); deliver rock to (36) and water to (37).

36. Eight double jigs with sieves, 2 × 3 feet. From (35) and (37); deliver hutch products to (47) and tailings to (55).

37. Four dewatering boxes. From (26) and (35); deliver rock to (36) and water to (38).

38. Two settling runs. From (31), (34), and (37); deliver settlings to (47) and tailings to (55).

39. Eleven settling tanks. From (19); deliver settlings to (31) and overflows to (40).

40. Two slimes tanks. From (18), (39), (43), and (45); deliver spigots, amounting to 120 tons per 24 hours, to (41), and overflows to (55).

41. Six round tables, 17 feet in diameter, with a capacity of 120 tons per 24 hours. From (40); deliver concentrates to (42) and tailings to (46).

42. Sand pump. From (41); delivers to (43).

43. Tank. From (42); delivers spigot to (44) and overflow to (40).

44. Wilfley table with a capacity of 26 tons per 24 hours. The concentrates represent 5.0% of the values recovered. From (43); delivers concentrates, as No. 4 mineral, to (54) and tailings to (45).

45. Sand pump. From (44) and (46); delivers to (40).

46. Settling run. From (41); delivers settlings to (45) and 120 tons of tailings per 24 hours to (55).

47. Feed hopper. From (27), (36), and (38); delivers to (48).

48. Double jig with sieves, 2 × 3 feet. From (47); delivers hutch products, as No. 4 mineral, to (54), and tailings to (49).

49. Double jig with sieves, 2 × 3 feet. From (48); delivers hutch products, as No. 4 mineral, to (54), and tailings to (50).

50. Sand pump. From (49); delivers to (19).

51. Concentrates bin for No. 1 mineral. From (6), (11), (14), and (20); delivers to smelter.

52. Concentrates bin for No. 2 mineral. From (15), (29), and (30); delivers to smelter.

53. Concentrates bin for No. 3 mineral. From (15) and (23); delivers to smelter.

54. Concentrates bin for No. 4 mineral. From (14), (16), (20), (25), (33), (44), (48), and (49); delivers to smelter.

55. Tailings launder. From (14), (16), (21), (27), (36), (38), (40), and (46); delivers to dump.

The concentrates average to run 75.0% in copper.

The largest size of concentrates made, which are not hand picked, is about 4 inches in diameter. The largest size of tailings made is 0.1875 inch in diameter.

§ 1514. MILL NO. 182. QUINCY MINING COMPANY'S MILLS, HANCOCK, MICHIGAN. — There are two mills,[161] located at Mason on Torch Lake, having a combined capacity of 4,700 tons per 24 hours. Mill No. 1 is built of wood and has 5 stamps, while Mill No. 2, built of steel on stone foundations, has a floor area of 132 × 216 feet and 3 stamps.

The economic mineral is native copper contained in a rock known as the Pewabic amygdaloid.[175] The problem is to save the copper.

Rock Houses.

The mine rock is dumped from the skips upon grizzlies which are made in two sections. The upper section is constructed of 2-inch steel bars placed 2 inches apart and sloping at an angle of 45°. In the lower section the bars are 12 inches between centers and slope at an angle of 20°. This combination grizzly automatically assorts the rock into three grades, of which the fine undersize goes to the mill bins, the coarse undersize is delivered, via chutes, to 2 Dodge rock breakers on the floor below; and the material too large to pass through the 10-inch space in the lower section of the grizzly is broken up by a steam trip hammer. Rock from the rock houses is delivered to (1).

A complete set of jigs and tables are used in connection with each stamp, the whole being considered as a unit. One of these units, No. 8 in Mill No. 2, is described below.

1. Bin, 20 feet wide by 312 feet long, having a capacity of approximately 1,000 tons. From the Rock House; delivers to (2).

2. Feed apron. From (1); delivers hand-picked mass copper to (41) and milling rock to (3).

3. Allis-Chalmers simple 2-way steam stamp. It has a 20-inch cylinder and makes 107.58 25-inch strokes per minute under a steam pressure of 142 pounds and crushes through 0.625-inch screen openings. The foundations are built up of heavy timbers and concrete, surrounded by a bottom plate weighing 22 tons, a middle plate weighing 18 tons, and a top plate weighing 18 tons, all of which are solid iron castings. The stamp is equipped with an hydraulic mortar discharge which differs from the Parnall-Krause discharge by having its exit from the top of the stave liner above the bowl of the mortar. The hydraulic water is also constant instead of being intermittent, and the pressure is regulated by a valve. The discharge is elliptical in form with axes 2.5 × 3 inches. Results of a test on this type of stamp follow:

Test on No. 7 head of No. 2 mill, stamping No. 6 shaft rock from January 27 to February 1, 1908, inclusive:

Date.	Running Time.				Tons of Rock.
	Stopped for Repairs.		Actual Time Run.		
	Hours.	Minutes.	Hours.	Minutes.	
January 27	.....	30	23	30	687.875
" 28	1	25	22	35	814.475
" 29	.....	55	23	05	749.075
" 30	.....	25	23	35	736.400
" 31	.....	25	23	35	753.250
February 1	1	.....	23	.....	758.900
Totals	4	40	139	20	4,499.975

Tons of rock actually stamped per day	750.
Tons of rock stamped per 24 hours' run	775.

Steam pressure, 135 pounds. Rolls were run during the above test. From (2); delivers discharge to (41) and pulp to (4).

4. Two hydraulic classifiers. The spigots from these classifiers with the hydraulic discharge from the stamp mortars yield about 60% of the total production of copper. From (3); deliver spigots to (41) and overflows to (5).

5. Two conical trommels, 4.47 and 5.31 × 2.5 feet long. Screens are 0.083 inch thick, slightly hardened, and have 0.25-inch holes. From (4); deliver oversize to (6) and undersize to (14).

6. Two Hodge bull jigs with 12-mesh, 12-wire sieves having a life of 90 days and plungers making 140 1.125-inch strokes per minute. Capacity 150

tons. From (5) and (9); deliver mineral, via automatic discharges, to (41) and tailings to (7).

7. Twelve-inch elevator with an 8-ply belt having a speed of 450 feet per minute, a life of from 20 to 30 months, 42 buckets, 5 × 6 × 10 inches, set 18 inches apart, having a life of about 1 year and elevating the rock 31.25 feet. From (6); delivers to (8).

8. Sturtevant rolls, 16 × 32 inches, making 100 revolutions per minute. Combined weight of shells is 2,074 pounds. From 1,200 to 1,600 pounds of copper are liberated here daily which formerly went back to (2). From (7); deliver crushed rock to (9).

9. Trommel with details like (5). From (8); delivers oversize to (6) and undersize to (10).

10. Two-spigot classifier. From (9); delivers spigots to (11) and overflow to (12).

11. Six 2-compartment Hodge jigs with 8-mesh, 8-wire sieves in the first compartments having a life of 150 days, 10-mesh, 10-wire sieves in the second compartments having a life of 300 days, and plungers making 162 0.875-inch strokes per minute. From (10); deliver discharges to (41), hutches to (12), and tailings to (44).

12. Settling tank. From (10) and (11); delivers spigot to (13) and overflow to (44).

13. Wilfley table. From (12); delivers concentrates to (41) and tailings to (44).

14. Two hydraulic classifiers. From (5); deliver spigots to (41) and overflows to (15).

15. Six 4-spigot classifiers. From (14); deliver first and second spigots to (16), third and fourth spigots to (17), and overflows to (24) and (29).

16. Twelve 2-compartment Hodge jigs with details like (11). From (15); deliver hutches to (19), middlings to (18), and tailings to (44) or (45).

17. Twelve 2-compartment Hodge jigs with details like (11). From (15); deliver hutches to (19) and tailings to (44) or (45).

18. Hodge and Cleaves cast-iron sand pump with arbor, 2 inches in diameter, and chilled cast-iron fan, 14.5 inches in diameter from the tips of the fans. The pump also has a removable chilled cast-iron lining and a speed of 750 revolutions per minute. When pumping 0.25-inch material against a head of 10 feet, it has a capacity of 30 tons per 24 hours and a life of from 7 to 8 weeks. When pumping material that would pass a 10-mesh sieve against a head of 15 feet, it has a capacity of 75 tons and a life of from 7 to 8 months. From (16); delivers to (32).

19. Two hydraulic classifiers. From (16) and (17); deliver spigots to (41) and overflows to (20).

20. Two 2-spigot classifiers. From (19); deliver spigots to (23) and overflows to (21).

21. Two settling tanks. From (20); deliver spigots to (22) and overflows to (44).

22. Two Wilfley tables. From (21); deliver concentrates to (41) and tailings to (44).

23. Six 2-compartment Hodge jigs with 12-mesh, 12-wire sieves in the first compartments having a life of 400 days, 14-mesh, 14-wire sieves in the second compartments having a life of 550 days, and plungers making 172 0.625-inch strokes per minute. From (20); deliver first two hutches to (41), second two hutches to (40), last two hutches to (25), and tailings to (44).

24. Settling tank. From (15); delivers spigots to (25) and (26) and overflow to (44).

25. Wilfley table. From (23), (24), (37), and (40); delivers concentrates to (27) and tailings to (41).

26. Two Wilfley tables. From (24); deliver concentrates to (27) and tailings to (44).

27. Hodge and Cleaves cast-iron sand pump with details like (18). From (25), (26), and (30); delivers to (28).

28. Settling tank. From (27); delivers spigot to (31) and overflow to (29).

29. Settling tank. From (15), (28), and (31); delivers spigots to (30) and overflow to (44).

30. Three Wilfley tables. From (29); deliver concentrates to (27) and tailings to (44).

31. Standard slime table. From (28); delivers concentrates to (43) and tailings to (29).

32. Settling tank. Receives middling product from roughing jigs of three sections. From (18); delivers to (33).

33. Trent Chili mill. From (32) and (47); delivers pulp to (34).

34. Two Hodge and Cleaves cast-iron sand pumps with details like (18). From (33); deliver to (35).

35. Hydraulic classifier. From (34); delivers spigot to (42) and overflow to (36).

36. One 2-spigot classifier. From (35); delivers spigots to (37) and overflow to (38).

37. Three 2-compartment Hodge jigs with details like (23). From (36); deliver first four hutches to (43), last two hutches to (25), and tailings to (44).

38. Settling tank. From (36); delivers to (39).

39. Wilfley table. From (38); delivers concentrates to (43) and tailings to (44).

40. Two 2-compartment Hodge jigs with details like (23). From (23); deliver hutches to (41) and tailings to (25).

41. Mineral bin No. 1. From (2), (3), (4), (6), (11), (13), (14), (19), (22), (23), and (40); delivers to smelter.

42. Mineral bin No. 2. From (35); delivers to smelter.

43. Mineral bin No. 3. From (31), (37), and (39); delivers to smelter.

44. Tailings launder. From (11), (12), (13), (16), (17), (21), (22), (23), (24), (25), (26), (29), (30), (37), (39), (48), (49), (50), and (51); delivers to dump.

Experimental Plant.

This plant was installed for the treatment of the roughing-jig tailings. From the roughing jigs (16) and (17), the tailings are delivered to (45).

45. Nordberg rolls, 16 × 36 inches, making 100 revolutions per minute. Combined weight of shells is 3,384 pounds. From (16) and (17); deliver crushed rock to (46).

46. Twelve-inch elevator with details like (7). From (45); delivers to (47).

47. Trommel with details like (5). From (46); delivers oversize to (33) and undersize to (48).

48. Classifier. From (47); delivers spigots to (49) and overflow to (44).

49. Hodge 2-compartment jigs with details like (23). From (48); deliver hutches to (50) and tailings to (44).

50 Settling tank. From (49); delivers spigots to (51) and overflow to (44).

51. Wilfley tables. From (50); deliver concentrates to (52) and tailings to (44).

52. Bin for concentrates. From (50); delivers, via tram, to smelters.

(41), (42), (43), and (52). These bins are constructed of concrete and cement and are kept at a temperature of 80° to dry out the water. The mineral bins for both mills are located at Mill 1. Mineral from Mill 1 is delivered via a bucket aerial tram, and mineral from mill 2 via electric surface tram. The gates to the bins are operated by steam.

The adoption of hydraulic discharges and other improvements has increased the capacity of the stamp heads in Mill 2 about 25%. Changes in the method of concentration, using Wilfley tables in connection with finisher jigs, has increased the capacity about 30%, with labor costs reduced 25% and loss in tailings cut down about 65%. The concentrates from the above system of tables and jigs now run over 70% and the tailings 0.20% in copper, while they formerly ran 57.0 and 0.59% respectively.

The oversize from the stamp trommels is passed to 2 jigs and thence to rolls. The material passing through the rolls is treated entirely separate from the undersize of the stamp trommels in order to determine what the rolls are doing. It has been found that from 1,200 to 1,600 pounds of copper per 24 hours is extracted, and as this was formerly returned to the stamps, it is evident that a large saving is effected by the elimination of the abrasion of this material in the stamps.

Of the present product of the mill about 30% is No. 3 grade mineral carrying very fine copper.

In 1905, 1,135,162 tons of rock were stamped yielding 18,827,557 pounds of fine copper, or a return of 16.5 pounds of fine copper per ton of rock.

At the No. 1 Mill a 24 × 25-inch "simple steam stamp" has been in operation for a year and given excellent results as regards rock stamped, steam used per horse-power hour, attention, and repairs. This stamp was made in the Quincy shops after the Allis-Chalmers type. It uses 100 pounds of steam pressure and makes 102.9 drops per minute. Its capacity is about one-third greater than the stamp described under (3). One man can attend to 3 of these stamps per shift.

The concentrates run about 65% copper, this tenor being determined by practical results to be the most economical to make for both the mills and the smelter. The tailings average about 0.24% copper.

Samples are taken from every jig, table, and machine where a loss of copper is liable to occur, including the tailings launder, day and night. This method of watching results has, at this property, proved money well spent. The mills run 2 shifts a day, 6 days a week.

Power and Water.

Power is furnished to the mills by four 250 horse-power Wickes vertical water-tube boilers, located in a separate building, 56 × 90 feet, having a steel frame and stone foundations.

An electric lighting system is used.

About 30,000,000 gallons of water per 24 hours are required for the present tonnage, or a ratio of about 29 parts of water to 1 part of solids. This water is taken from Torch Lake through a tunnel, 7 × 7.5 feet, driven for 100 feet under the bed of the lake. The pump house, 54 × 54 feet, is constructed of brick. An Allis-Chalmers vertical triple-expansion pump with a capacity of 20,000,000 gallons per 24 hours, and three smaller pumps with a combined capacity of 21,000,000 gallons per 24 hours furnish all the water necessary for the milling and boiler supply.

V. MILLS SAVING ONLY PYRITE.

Mills 183 and 184 illustrate this group of concentrating plants which dress ore for the manufacture of sulphuric acid.

§ 1515. MILL No. 183. ARMINIUS MILL, ARMINIUS CHEMICAL COMPANY, MINERAL, LOUISA COUNTY, VIRGINIA.[119] — This mill has a capacity of 250 tons in 10 hours.[38] The ore consists of the economic mineral cupriferous pyrite in a slate gangue. The problem is to save the pyrite. Run of mine ore is delivered to (1), but some mixed ore and slate is broken with hammers and delivered, via car, to (2).

1. Two grizzlies, 10.25 feet long, arranged in series with steel bars 2.25 inches in diameter at the top, tapered to 1.75 inches at the bottom and hung loose in chilled-iron sockets. The upper grizzly has 0.75-inch spaces between the bars at the top, 1.25-inch at the bottom, and a slope of 7.25 inches to the foot. The lower grizzly has 2.5-inch spaces between the bars at the top, 3.5-inch at the bottom, and a slope of 5.75 inches to the foot. From the mine; deliver material larger than 3.5 inches, via bin and car, to (2); material between 3.5 and 1.25 inches, via bin and car, to (3); and material smaller than 1.25 inches, via bin and car, to (6).

2. One Buchanan breaker with a 9 × 15-inch jaw opening and manganese-steel jaw plates breaking to 4 inches. From the mine and (1); delivers crushed ore to (3).

3. One 14-inch Robins belt conveyor with a 4-ply rubber belt having a speed of 300 feet per minute. From (1) and (2); delivers to (4).

4. One Grizzly with 1.5-inch steel bars set 1.5 inches apart and sloping 12 inches to the foot. Made fan-shaped. From (3); delivers oversize to (5) and undersize to (6).

5. One Dodge breaker with a 11 by 15-inch jaw opening and steel jaw-plates breaking to 1.5 inches. From (4); delivers crushed ore to (6).

The mill is divided into three similar sections from this point. Only one is described.

6. One hexagonal trommel, 3 × 10 feet, with 0.11 × 0.5-inch slot punched holes. Slopes 2 inches to the foot and makes 15 revolutions per minute. From (1), (4), (5), and (9); delivers oversize to (7) and undersize to (10).

7. One set of geared rolls, made by Beckett and McDowell, 14 × 30 inches. The steel shells weigh 1,063 pounds when new and make 30 revolutions per minute. From (6); deliver crushed ore to (8).

8. One set of Allis-Chalmers high-speed rolls, 14 × 24 inches. The steel shells are set close and make 100 revolutions per minute. From (7); deliver crushed ore to (9).

9. Elevator. From (8); delivers to (6).

10. Two 4-compartment Harz jigs with sieves having 0.25-inch square holes and jig beds made of 0.5-inch chilled-iron balls. The plungers make 133 strokes per minute. From (6) and (12); deliver concentrates, via gates, to (13), the second hutch products to (13), all other hutch products to (11), and the tailings to waste.

11. One 4-compartment Harz jig with details as in (10). From (10); delivers concentrates, via gates, to (13) and the tailings to (12).

12. Rolls. From (11); deliver crushed ore to (10).

13. Three 14-inch Jeffrey belt conveyors with 4-ply rubber belts having speeds of 375 feet per minute. From (10) and (11); deliver, via Jeffrey trippers, to the storehouse.

The mill operates two 10-hour shifts per day for 6 days a week.

Power.

Power is furnished by two Phœnix, 80 horse-power, return-tube boilers and two Heine, 200 horse-power, water-tube boilers, for both the mine and mill. The mill is driven by a 150 horse-power engine.

§ 1516. MILL NO. 184. PYRITE DRESSING PLANT OF THE VEREIN CHEMISCHER FABRIKEN, MORGENSTERNWERK NEAR MERSDORF, ROHNAU, SILESIA. — The capacity of this plant is 150 tons per 20 hours.[83] The crude ore, carrying from 7 to 10% sulphur, is delivered from the mine to (1). The economic mineral is pyrite.

1. Two hand tumblers. From the mine; one delivers to (2) and the other to (3).

2. Grizzly with 60-millimeter spaces between the bars. From (1); delivers oversize to (3) and undersize to (5).

3. Storage bin. From (1) and (2); delivers, via feeder, to (4).

4. Breaker with a jaw opening of 0.32 × 0.5 meter. From (3); delivers crushed ore to (5).

5. Two bins. From (2) and (4); deliver, via two percussion feeders, to (6).

6. Two wet ball mills crushing through 16-mesh screens with 1-millimeter openings. From (5); deliver crushed ore to (7).

7. Six Spitzlutten. From (6); deliver spigots of first four Spitzlutten to (8), of last two to (9), and overflows to (10).

8. Four 3-compartment jigs. From (7) and (8); deliver concentrates to market, middlings to (8), and tailings to waste.

9. Two Ferraris oscillating tables. From (7); deliver concentrates to market, middlings to (15), and tailings to waste.

10. Two pulp thickeners. From (7); deliver spigots to (11) and overflows to (12).

11. Ferraris oscillating table. From (10); delivers concentrates to market, middlings to (15), and tailings to waste.

12. Spitzkasten. From (10) and (16); delivers spigots to (13) and overflow to (14).

13. Ferraris oscillating table. From (12); delivers concentrates to market, middlings to (15), and tailings to waste.

14. Sump. From (12).

15. Bucket elevator. From (9), (11), and (13); delivers to (16).

16. Spitzlutten and Spitzkasten. From (15); deliver spigots to (17), and overflows to (12).

17. Two Ferraris oscillating tables. From (16); deliver concentrates to market and tailings to waste.

The concentrates assay 47% sulphur and represent a recovery of 85% of the total sulphur content of the ore. The tailings run from 1 to 1.3% sulphur.

Power.

A 200 horse-power Körting gas engine drives two dynamos; one furnishing a 150-killowatt, 3-phase, 500-volt current, and the other furnishing a 14-kilowatt direct current for lighting 60 incandescent and 12 arc lamps.

The big dynamo furnishes current to drive four motors of 100, 30, 15, and 5 horse-power respectively. The 100 horse-power motor drives all the machinery in the mill with the exception of one of the ball mills (6), which is driven by the 30 horse-power motor. The 15 horse-power motor runs a double hoist at the mine and the 5 horse-power motor runs the pumps.

The plant is heated by steam.

W. MILLS SAVING TIN AND TUNGSTEN VALUES.

To exemplify the Cornish tin practice Mill 185 is given.

§ 1517. MILL NO. 185. DRESSING TIN ORES AT THE OLD CLITTERS MINE, NEAR GUNNIS LAKE, EAST CORNWALL, ENGLAND.[130] — The ore contains tin in the mineral form as cassiterite, tungsten as wolframite, and the sulphides of iron, arsenic, and copper.[102] The gangue is of a quartzose character and is made up of granites, etc. The problem is to separate the cassiterite from the other minerals and the gangue, and to separate and save the sulphides of iron and copper. This plant treats about 2,600 tons per month. The average mill feed runs 1.23% tin and the tailings about 0.11% tin.

The ore at the mine is divided into two portions, the larger of which is delivered to (1) and the smaller to (5).

1. Two grizzlies with 2-inch spaces between the bars. From the mine; deliver oversize to (2) and undersize to (3).

2. Blake-Marsden rock breaker, with a jaw opening 10 × 15 inches. From (1); delivers crushed ore to (3).

3. Storage hopper. From (1) and (2); delivers, via four Challenge feeders, to (4).

4. Twenty stamps weighing 800 pounds each, dropping 9 inches 95 times per minute, having 25-mesh gun-metal woven-wire screens and a capacity of about 3 tons each per 24 hours. From (3); deliver pulp to (12).

5. Storage hopper. From the mine; delivers to (6).

6. Shaking screen. From (5); delivers oversize to (7) and undersize to (8).

7. Rock breaker with a jaw opening 8 × 12 inches. From (6); delivers crushed ore to (8) or (11).

8. Rolls, 12 × 28 inches. From (6), (7), and (9); deliver crushed ore, via elevator, to (9).

9. Vibro screen. From (8); delivers oversize to (8) and undersize to (10).

10. No. 6 ball mill with 30-mesh screen. From (9); delivers to (12).

11. Five stamps. For details see (4). From (7); deliver pulp to (12).

12. Three Spitzlutten, two with 3 compartments each and one with 2 compartments. From (4), (10), and (11); deliver spigots to (14) and overflows to (13).

13. One Spitzkasten with 10 compartments. Fifty feet long, 6 feet wide on top, and 5.5 feet deep. From (12); delivers spigots to (15) and overflow to (20).

14. Eight Buss swinging tables. From (12) and (14); deliver concentrates to (21); middlings, via elevator, to (14), and tailings to (20).

15. Four double-compartment distributing boxes. From (13); deliver to (16).

16. Four double Lührig vanners. From (15); deliver concentrates to (21), middlings, via centrifugal pump, to (17), and tailings to (20).

17. Small Spitzkasten. From (16); delivers spigot to (18) and overflow to (20).

18. Distributing box. From (17); delivers to (19).

19. One double Lührig vanner. From (18); delivers concentrates to (21) and tailings to (20).

20. One Spitzkasten with 8 compartments, 40 feet long, 8 feet wide on top, and 5.5 feet deep. From (13), (14), (16), (17), and (19). Lime is added to coagulate the slimes. The spigot is delivered to settling ponds and the overflow, via pump, to water supply tank.

21. Calciner. From (14) and, at a different time, from (16) and (19);

delivers the former to (24) and the latter to (22). The concentrates from (14 contain sulphides of only iron, copper, and arsenic; also cassiterite and wolframite; while the concentrates from (16) and (19) also contain the oxide of iron.

22. Convex Cornish buddles. From (21); deliver concentrates to (23) and tailings of iron oxide to waste.

23. Reverberatory drier. From (22); delivers to (24).

24. One Wetherill cross-belt magnetic separator with 4 fields. From (21) and (23); delivers most magnetic product of iron oxide to waste; the second, or copper iron product, to the copper leaching plant; the third and fourth, or iron and wolfram products, are cleaned by buddles and kieves, or kieves alone, and sold; and the non-magnetic, or tin product, is kieved and sent to the tin smelter.

There is also a No. 2 wet ball mill for crushing old wet middlings and sending them to the washing machines. At times it is used dry for re-crushing the first and second Wetherill products when they are rich in tin and tungsten. Later it is proposed to use it for recrushing the Buss middlings to be treated on the Lührig vanners.

The roasting aims to convert the iron in the sulphides of iron, arsenic, and copper into the magnetic oxides and it is thus largely eliminated, as waste, in the first Wetherill product.

During July, 1903, the mill treated 2,600 tons carrying 34.33 tons of cassiterite and wolframite. 10.4 tons of cassiterite, running 65% tin, and 20.2 tons of wolframite, running 62.5% tungsten, were recovered or 89.1%. The cost of milling per ton is about 59 cents.

Experiment has shown that woven-wire screens in the batteries are better than punched plate and that ball mills produce less slimes than stamps.

The satisfactory extraction is claimed to be due largely to the classification, and criticism is made of the lack of classification in many Cornish mills.

X. MILLS SAVING ONLY ASBESTOS.

To illustrate the Quebec practice in asbestos dressing Mill 186 is given.

§ 1518. MILL NO. 186. GENERAL PRACTICE OF ASBESTOS MILLING IN QUEBEC, CANADA. — The ore is mined almost entirely by the open-cut and quarrying system as the veins are very irregular and quite liable to pinch out with depth.[51] The economic minerals are actinolite occurring in, and closely associated with, blackish green hornblende rocks; and chrysotile which is found in the serpentine rocks. As the market for the former is very limited and the prices, as a rule, not satisfactory, only the treatment of chrysotile will be outlined here. The mills are usually within 500 feet of the pit and have a wooden substructure covered by either wood, galvanized iron, or tarred paper. Few are painted but all are well guarded against, and protected from, fire. The mills are usually operated 2 shifts during the 24-hour day, and the capacities of the plants vary from 75 to 500 tons per 24 hours with an average of about 150 to 250 tons. Of the total ore mined about 30 to 60% goes to the mill and the mills extract, in the form of salable products, from 6 to 10% of the total amount of ore they treat. Of the total products made both by cobbing and milling about 10% is represented by crude cobbed material, 15 to 20% of Nos. I and II mill fiber, and from 70 to 75% of paper stock.

Cobbing.

In the open cut or pit the ore is divided into the following classes: first, rock containing long fiber which is sent to (1); second, rock containing medium fiber which is sent to (3); third, rock containing small fiber which is sent to

(7); fourth, refuse and fines which are sent to (6); and fifth, coarse waste rock which is sent to the waste dump. These different products are all taken from the pit by means of a derrick, the cable-type being the most common form in use.

1. Men's cobbing shed. "Single-jack" hammers weighing from 6 to 7 pounds each are used. From the pit; delivers long fiber and small stones with long fiber to (2), stones with short fiber to (7), refuse and fines to (6), and waste rock to waste dump.

2. Screens with 0.1875-inch holes. From (1); deliver oversize to (3) and undersize to (6).

3. Girl's cobbing shed. "Single-jack" hammers weighing from 1.5 to 2 pounds each are used. From the pit and (2); delivers coarsest fiber to (4), medium fiber to (5), and refuse and fines to (6).

4. Screen with 0.5625-inch holes. From (3); delivers oversize, as No. 1 crude measuring over 0.75 inch in length, via bags to market and undersize to (5).

5. Screen with 0.375-inch holes. From (3) and (4); delivers oversize, as No. II crude measuring from 0.56 to 0.75 inch in length, via bags to market and undersize to (6).

Most of the cobbing is done by contract at from 30 to 35 cents per 100 pounds.

Drying and Crushing.

6. Drier. From the pit, (1), (2), (3), and (5); delivers dry ore to (7).

7. Ore bin. From the pit, (1), and (6); delivers to (8).

8. Blake breaker. Usually hand fed and requires 1 man per shift. From (7); delivers to (9).

9. Rotary drier, 3 feet in diameter and 30 feet long, having a slope of about 7°, making 6 to 8 revolutions per minute, having longitudinal blades, a capacity of from 50 to 75 tons per shift, and requiring about $3.50 per shift for fuel, on a basis of $2 per cord for soft wood and $3 per cord for hard wood. One man per shift required on automatically fed driers. From (8); delivers to (10).

Concentration.

10. Bucket elevator. From (9); delivers to (11).

11. Sturtevant rotary breaker No. 2, 20 × 30 inches, having a capacity of from 8 to 12 tons per hour, a speed of 250 revolutions per minute, and requiring from 15 to 20 horse-power. From (10); delivers to (12).

12. Fiberizer, 3 feet in diameter and 11 feet long. From (11); delivers to (13).

13. Bucket elevator. From (12); delivers to (14).

14. Screen with 0.0625-inch holes. From (13); delivers oversize to (15) and undersize to dump.

15. Fan. These fans are made of galvanized iron, are 30, 35, and 40 inches in diameter, and make from 1,800 to 2,200 revolutions per minute. From (14); delivers fiber to (19) and residue to (16).

16. Cyclone beater. These have capacities ranging from 25 to 60 tons per 10 hours. The blades are generally made of chilled cast iron and have a life of from 10 to 14 days. From (15); delivers to (17).

17. Shaking screen with 0.0625-inch holes. From (16); delivers oversize to (18) and undersize to dump.

18. Fan. For details see (15). From (17); delivers fiber to (19) and residue to dump.

19. Collector I. From (15) and (18); delivers to (20).

20. Revolving screen with 0.31-inch holes and arms revolving in a direction

opposite to that of the screen. From (19); delivers oversize to (21) and undersize to (25).

21. Ten-mesh shaking screen. From (20); delivers oversize to (22) and undersize to (27).

22. Fan. For details see (15). From (21); delivers fiber to (23) and residue to (34).

23. Collector II. From (22); delivers to (24).

24. Shaking screen. From (23); delivers oversize, as fiber No. 1, to market and undersize to (34).

25. Twelve-mesh shaking screen. From (20); delivers oversize to (26) and undersize to (27).

26. Fan. For details see (15). From (25); delivers fiber to (29) and residue to (27).

27. Twelve-mesh shaking screen. From (21), (25), and (26); delivers oversize to (28) and undersize to (30).

28. Fan. For details see (15). From (27); delivers fiber to (29) and residue to (30).

29. Collector III. From (26) and (28); delivers fiber No. II, or paper stock, to market.

30. Cyclone beater. For details see (16). From (27) and (28); delivers to (31).

31. Thirty-five-mesh screen. From (30); delivers oversize to (32) and undersize to (34).

32. Several suction cleaners or "suckers," each taking the residue left by the preceding machine. From (31); deliver small fiber to (33) and residue to (34).

33. Collector IV. From (32); delivers small fiber to market for the manufacture of asbestos wood.

34. Sturtevant horizontal emery mill. The 42-inch mill has a capacity of from 1 to 3 tons per hour, makes from 300 to 350 revolutions per minute, and requires about 18 horse-power. From (22), (24), (31), and (32); delivers asbestos finishing powder, for the manufacturing of plaster, to market.

The different processes are usually divided and each performed in separate buildings such as buildings for cobbing, drying and crushing, concentrating, power, etc. When conveyors are required the rubber-belt type is used.

Steam power is used in most cases, but electrical equipment is commencing to be installed in several instances. Steam power varies in cost from $35 to $47 per horse-power year.

About 1 to 1.5 horse-power is required per ton of ore crushed and milled.

Following is a table of the help employed and wages paid in two mills:

	Number.	150-Ton Mill or 75 Tons per Shift.	Number.	250-Ton Mill or 125 Tons per Shift.
Engineers at $2.00	1	$2.00	1	$2.00
Firemen at 1.75	1	1.75	2	3.50
Millwright at 4.00	1	4.00	1	4.00
Foreman at 2.00	1	2.00	1	2.00
Oilers and helpers at 1.75	1	1.75		
Helpers at 1.50			3	4.50
Breaker feedermen at 1.25	3	3.75	3	3.75
Drier firemen at 1.25	1	1.25		
Drier firemen at 1.50			2	3.00
Sandmen at 1.50	1	1.50	2	3.00
Men for bagging at 1.25	3	3.75	4	5.00
Totals	13	$21.75	19	$30.75
Average labor cost per ton milled		$0.29		$0.25
" production of fiber		7 tons		12 tons
" labor cost per ton of fiber		$3.11		$2.56

Following are the average results for 3 months obtained by a mine which has been working for years on fairly good ground; all the rock and fiber from the mines was sent to the mill. The mill and mine worked only in the day shift, the quantity of milling material treated per day ranged between 80 and 90 tons or about 60% of the total rock mined. The production of asbestos of all grades was, on an average, 7.5 tons per day or about 9.5% of the milling ore. Forty men were employed in the mine and 13 men at the mill.

(1). Per ton of total rock mined:

$66.50 + 125 = $0.53

(2). Per ton of milling rock:

Mining	$66.50 + 80 = $0.83
Milling	64.16 + 80 = 0.80

(3). Per ton of asbestos:

Mining	$66.50 + 7.5 = $8.86
Milling	64.16 + 7.5 = 8.55

(4). Total cost of production per ton of asbestos mined and milled: $17.41. Based upon a finer division of the expenses this total cost of $17.41 is composed of the following items:

Wages	$76.00 + 7.5 =	$10.13
Power	31.44 + 7.5 =	4.19
Bags	10.50 + 7.5 =	1.40
Machinery, repairs, and supplies	7.62 + 7.5 =	1.01
Explosives	3.60 + 7.5 =	0.48
Oil, grease, waste, etc.	1.50 + 7.5 =	0.20
	$130.66	$17.41

It is estimated that if the capacity of the mining and milling plant in question was increased to 300 tons of milling rock, the above cost could be reduced to $14.50 per ton of asbestos produced.

To the above costs must be added the expense for general management, offices, insurance, marketing, amortization, etc.

In the mines of the district the following scale of wages per shift prevails: Foremen, $2; engineers, $1.75; machine drillmen, $1.75; helpers, $1.50; blacksmiths, $1.75; helpers, $1.50; car and derrick men, $1.25; miners, $1.25; and boys, $0.75.

The prevailing market prices in 1905 were:

Number	I	crude	$175 to $200
"	II	"	110 to 125
Fiber	" I	(special)	75 to 80
"	" II		50
"	" II, III	paper stock	20 to 25
Asbestos board material			8

Y. MILLS SAVING ONLY MERCURY VALUES.

Mill 187 shows the cinnabar ore-dressing practice in Austria.

§ 1519. MILL NO. 187. CINNABAR ORE DRESSING AT IDRIA, AUSTRIA.[9] — The ore is hand sorted in the mine into two classes (*a*) and (*b*). The (*a*) grade contains a medium amount of mercury and rich ore, and the (*b*) grade is ore from the vein walls containing a large proportion of gangue. Wet crushing was carried on from 1694 to 1842 when the losses were found to be too great and the treatment here given was introduced and has been in vogue ever since.

The (*a*) grade of ore from the mine goes to (1).

1. Grizzly with 50-millimeter openings. From the mine and (2); delivers oversize to (2) and undersize to (3).

2. Breaker. From (1); delivers, via elevator, to (1).

3. Trommel with 5-millimeter holes. From (1); delivers oversize to (4) and undersize, periodically, to (9).

4. Trommel with 10-millimeter holes. From (3); delivers oversize to (5) and undersize to (7).

5. Trommel with 20-millimeter holes. From (4); delivers oversize to (6) and undersize to (7).

6. Picking table. From (5); delivers rich, medium, and poor grades into three different bins in (7).

7. Bin with 5 compartments. From (4), (5), and (6); delivers, each grade separately, to (8).

8. Breaker set to 5 millimeters. From (7); delivers to (9).

9. Picking table. From (3) and (8); delivers medium concentrates containing 20% mercury and rich concentrates containing 30% mercury to the continuous furnace.

The (*b*) grade of ore from the mine goes to (10).

10. Grizzly with 70-millimeter openings. From the mine and (11); delivers the oversize to (11) and the undersize to (12).

11. Breaker. From (10); delivers, via elevator, to (10).

12. Perforated screen with 20-millimeter holes. From (10); delivers oversize to (14) and the undersize to (13).

13. Perforated screen with 10-millimeter holes. From (12); delivers oversize to (15) and undersize or sand, between 0 and 10 millimeters, and running 1% in mercury, to the reverberatory furnace.

14. Picking table. From (12); delivers ore, between 20 and 70 millimeters, and running 0.5% in mercury, to a shaft furnace and waste to the waste dump.

15. Picking table. From (13); delivers ore, between 10 and 20 millimeters, and running 1% in mercury, to the reverberatory furnace and waste to the waste dump.

The annual profit from the mines of Idria is about $154,400. Table 551 shows the result of the milling operation as carried out.

TABLE 551. — RESULTS OF MILLING AT MILL 187.

Year.	Ore.			Mercury Extracted.	
	Description.	Amount Mined.			
		Tons.	Percent.	Tons.	Percent.
1882	Rich ore	2,100	6.41	194.90	9.28
	High-grade concentrates	19,300	59.20	175.72	0.91
	Low-grade concentrates	11,200	34.35	56.64	0.50
	Total	32,600	100.00	427.26	1.31

The above results were obtained by 73 men per day and the net cost of treatment varied between 96.5 cents and $7.70 per ton of ore.

1891	Ore mined	63,210 tons
	Contained in mercury	832 "
	Yielded "	0.84 percent
1901	Ore mined	90,466 tons
	Yielded in mercury	0.56 per cent
	Consumption of charcoal	4,265 cubic meters
	" wood	16,295 "

Z. MILLS SAVING ONLY DIAMONDS.

To exemplify the general methods of recovering diamonds in South Africa, Mill 188 is given.

§ 1520. MILL NO. 188. DIAMOND WASHING IN SOUTH AFRICA.[142] — The blue ground in which the diamonds occur, after coming from the mines, is conveyed by mechanical haulage systems and deposited on large flat spaces of ground commonly known as "floors." Here it is spread out in layers about 15 inches deep and allowed to remain from 9 to 15 months exposed to the action of the air, sun, and rain. During this time it is harrowed occasionally and sprinkled with water. These operations, together with the disintegrating action of the elements, break up the rock and reduce the whole mass on the "floors" to fine material with the exception of a small percentage of lumps. When the blue ground is sufficiently pulverized, it is shoveled into cars and hauled to the washing plants. The cars used have a capacity of about 16 cubic feet and their standard load is 1,600 pounds.

The ground is first dumped over a grizzly or put through a revolving trommel in order to separate the lump from the fine material. The lumps are put through breakers and then through rolls, the latter reducing them to a size of not over 0.75-inch cubes. From the rolls the ground is hoisted by means of bucket elevators and delivered to the pans. The undersize from the grizzly or trommel comes into the pans with the crushed lumps and water is added to form a puddle. The pans are provided with revolving arms having blades which constantly stir up and dissolve the small lumps until the puddle looks much like a rather thick mud. The fine mud and lighter parts of the puddle pass off at the overflow of the pan and go either by launder or elevator to the tailings pile. Every five or six days the puddle in the pan is drawn off, leaving the heavy material consisting of the larger pieces of gravel, garnets, rough diamonds, etc., as a deposit in the bottom of the pan. This material is scraped out and carried to a revolving trommel where it is washed. The clean gravel containing the diamonds goes by bucket elevator to a sizing trommel which separates it into four or five different grades. This sized material then goes to jigs where the lighter portion is jigged off and taken directly to the tailings dump. The residues left on the jig sieves contain diamonds, garnets, and heavy gravel concentrates. This material is now ready for the grease tables.

A grease table consists of an incline plane, 7 feet long and 4 feet wide, mounted on 4-posted legs and carrying four sets of corrugated plates arranged in step fashion one after another. The corrugations are filled with grease and run at right angles to the direction in which the gravel is fed on. The table receives a side shake by means of an eccentric which gives a throw of about 0.875 inch. The table makes 240 throws per minute.

The gravel containing the diamonds is fed to the tables from hoppers by means of corrugated feed rollers driven by ratchet wheels. Water is introduced at the head of the tables and washes the gravel over the grease and off the table, where it is either saved for re-treatment or goes directly to the waste dump. The diamonds and a very small part of the gravel stick to the grease which is scraped off the table, and the grease, gravel, and diamonds are put in a perforated box. This box with its contents is immersed in boiling water and the grease, boiled out, comes to the surface and is skimmed off to be used again. The material in the box is poured out upon tables and the gravel, garnets, etc., separated from the diamonds by hand. The diamonds are then spread out upon long tables where they are separated into many classes depending on weight, color, shape, etc. This is the last process before the stones are sent to London or Amsterdam to be cut.

About 95% of the diamonds are caught on the first plate of the shaking table, there being only a very few caught by the second, third, and fourth plates.

Fully 98% of the diamonds are caught the first time over the table, but the tailings are re-run 3 or 4 times to recover the 2% of stones that do not stick the first time. The grease is re-used several times.

At the Premier diamond mine a tube mill was used to crush the blue ground. The mill was 22 × 5.5 feet and used 3 tons of pebbles. It crushed 23 loads or about 18.4 tons per hour through a slotted screen with openings 1.25 × 3 inches. These results appear promising but no further work along this line has been made public. Table 552 gives details of cost and production of the DeBeers Mining Company for the year ending June 30, 1907.

TABLE 552. DETAILS OF COST AND PRODUCTION OF THE DEBEERS MINING CO., FOR THE YEAR ENDING JUNE 30, 1907.[76]

Mine.	Output of Blue Ground per Year. Loads (*a*).	Yield per Load in Carats.	Value per Carat.	Value per Load.	Cost per Load.		
					Mining.	Washing.	Total.
De Beers	1,525,184	0.37	$15.55	$5.76	$1.21 (*b*)	$0.74	$1.95
Kimberley	578,669				1.71	0.99	2.70
Wesselton	2,104,308	0.32	9.87	3.16	0.86	0.51	1.37
Bulffontein	2,320,538	0.32	10.45	3.31	0.95	0.54	1.49
Dutoitspan	2,481,987	0.24	19.10	4.54	0.97	0.60	1.57

(*a*) The "load' occupies 16 cubic feet and weighs about 1,600 pounds.
(*b*) Including the cost of handling waste rock.

BIBLIOGRAPHY OF OUTLINES OF MILLS.

1. Agassiz, Alexander, of Boston, Massachusetts. Private communication.
2. Allen, John H., of Knox and Allen, New York City. Private communication.
3. *Am. Inst. Min. Eng.*, Vol. XXXIII., (1903), p. 235. Finlay, J. R. "The Mining Industry of the Coeur d'Alenes, Idaho."
4. *Ibid.*, Vol. XXXIV., (1904), p. 265. Hofman, H. O. "Anaconda Copper Mining Company."
5. *Ibid.*, p. 585. Merrill, C. W. "Metallurgy of the Homestake Ore."
6. *Ibid.*, Vol. XXXVII., (1906), p. 431. Austin, L. S. "Anaconda Copper-Mining Company in 1905."
7. *Ibid.*, Vol. XXXVIII., (1907), p. 200. Lamb, Mark R. "The Butters Slime-Filter at the Cyanide Plant of the Combination Mines Company, Goldfield, Nevada."
8. *Ibid.*, Vol. XXXIX., (1908), p. 72. Ferraris, Erminio. "The Mechanical Preparation of Ores in Sardinia."
9. *Ann. des Mines de Belgique*, Vol. IX., (1904), pp. 1 and 76. Demaret, Leon. "The Principal Mercury Deposits of the World."
10. *Austr. Inst. Min. Eng.*, Vol. X., (1905), p. 197. Low, F. Stanley. "Concentration of Silver-Lead Ores."
11. *Austr. Min. Standard*, June 17, (1908), p. 640. Williams, Gerard W., of Laverton, West Australia. "Metallurgy of Broken Hill."
12. Ayres, Enas, of Traylor Engineering Company, New York City. Private communication.
13. Badger, H. S., of Goldboro, Nova Scotia, Canada. Private communication.
14. Batcheller, J. H., of Smuggler, Colorado. Private communication.
15. Benedict, C. H., of Lake Linden, Michigan. Private communication.
16. Bent, Quincy, of Lebanon, Pennsylvania. Private communication.
17. *Berg. u. Hütt. Jahrb.*, Vol. LIII., (1905), p. 85. Bauer, Julius. A long article on the Central Mill of the Twelve Apostles Mine.
18. Berray, Niles S., of Globe, Arizona. Private communication.
19. Bettles, A. J., of Salt Lake City, Utah. Private communication.
20. Bilharz, O. M., of Flat River, Missouri. Private communication.
21. Blake, Ross, of Leadwood, Missouri. Private communication.
22. Bosqui, F. L., of San Francisco, California. Private communication.
23. Bradley, F. W., of San Francisco, California. Private communication.
24. Burbidge, Frederick, of Silver King, Idaho. Private communication.

25. Burch, H. K., of Moctezuma, Nacozari, Sonora, Mexico. Private communication.
26. Burgan, A. L., of Hubbell, Michigan. Private communication.
27. Caetani, Gelasio, of San Francisco, California. Private communication.
28. Caldecott, W. A., of Johannesburg, South Africa. Private communication.
29. Callow, J. M., of Salt Lake City, Utah. Private communication.
30. Cambourne, G. W., of Park City, Utah. Private communication.
31. Canadian Report on Asbestos, its Occurrence, Exploitation, and Uses, (1905). By Fritz Cirkel.
32. Canadian Report on the Zinc Resources of British Columbia and their Commercial Exploitation, (1906), p. 197. By Walter Renton Ingalls.
33. *Ibid.*, p. 198.
34. Canby, R. C., of El Paso, Texas. Private communication.
35. Carmichael, Norman, of Morenci, Arizona. Private communication.
36. Cates, Louis S., of Bingham, Utah. Private communication.
37. Chase, Charles A., of Denver, Colorado. Private communication.
38. Clearihue, Joseph B., of Mineral, Louisa County, Virginia. Private communication.
39. Coggin, F. G., of Redridge, Michigan. Private communication.
40. Cole, David, of Cananea, Sonora, Mexico. Private communication.
41. Cole, T. F., of Duluth, Minnesota. Private communication.
42. Collins, Edgar A., of Goldfield, Nevada. Private communication.
43. Cooper, William, of Georgetown, Colorado. Private communication.
44. Cox, Thomas, of Ely, Nevada. Private communication.
45. Cox, William J., of Ouray, Colorado. Private communication.
46. Demond, C. D., of Anaconda, Montana. Private communication.
47. Denny, George A., of Johannesburg, South Africa. Private communication.
48. Denny, H. S., of Johannesburg, South Africa. Private communication.
49. Denton, F. W., of Painesdale, Michigan. Private communication.
50. Dwight, A. S., of New York City. Private communication.
51. Ehle, Mark, Jr., of Rapid City, South Dakota. Private communication.
52. *Eng. & Min. Jour.*, Vol. LXXIV., (1902), p. 724. No author. "Tomboy Gold Mines Company."
53. *Ibid.*, Vol. LXXVI., (1903), p. 118. Rickard, T. A. "Across the San Juan Mountains."
54. *Ibid.*, Vol. LXXVIII., (1904), p. 1042. No author.
55. *Ibid.*, Vol. LXXIX., (1905), p. 503. No author. "Newhouse Mines and Smelters."
56. *Ibid*, p. 543. No author.
57. *Ibid.*, Vol. LXXX., (1905), p. 57. No author. "The Newhouse Mine and Mill."
58. *Ibid.*, Vol. LXXXI., (1906), p. 75. No author. "The Ball and Norton Magnetic Separator."
59. *Ibid.*, p. 418. Hutchinson, W. Spencer. "Mining in Western Chihuahua."
60. *Ibid.*, p. 748. No author. "High Grade Magnetite."
61. *Ibid.*, p. 890. Granberry, J. H. "Magnetite Deposits and Mining at Mineville, New York."
62. *Ibid.*, p. 896. Woodbridge, Dwight E. "Arizona and Sonora." I.
63. *Ibid.*, pp. 986, 1035, 1082, 1130, and 1178. Granberry, J. H. "Magnetite Deposits and Mining at Mineville, New York."
64. *Ibid.*, Vol. LXXXII., (1906), p. 53. Staff correspondence. "The Daly-West Mill, Park City, Utah."
65. *Ibid.*, p. 150. Woodbridge, Dwight E. "The Arizona Copper Company."
66. *Ibid.*, p. 248. Staff correspondence. "The Daly-Judge Mill."
67. *Ibid.*, p. 531. Hodgkins, A. E. "Mine Accounting at Mineville, New York."
68. *Ibid.*, p. 623. Woodbridge, Dwight E. "La Cananea Mining Camp."
69. *Ibid.*, p. 965. Woodbridge, Dwight E. "Concentration at Cananea."
70. *Ibid.*, p. 1217. Denny, G. A., and H. S. "Recent Innovations in Rand Metallurgical Practice."
71. *Ibid.*, Vol. LXXXIII., (1907), p. 317. Delprat, G. D. "Ore Dressing at Broken Hill."
72. *Ibid.*, Vol. LXXXIV., (1907), p. 765. Ingalls, Walter Renton. "Concentration Upside Down."
73. *Ibid.*, Vol. LXXXV., (1908), p. 53. Wilkinson, W. Fischer. "The Transvaal."
74. *Ibid.*, p. 453. McClave, J. M. "The Wilfley Roaster."
75. *Ibid.*, p. 698. Canby, R. C. "Separation of Mixed Sulphides at Charcas, San Luis Potosi."
76. *Ibid.*, p. 779. No author. "DeBeers Consolidated Mines, Limited."
77. *Equipment News*, Vol. I., (September, 1906). Published by the Hendrie & Bolthoff Manufacturing & Supply Company, Denver, Colorado.
78. Eustis, A. H., and W. E. C., of Boston, Massachusetts. Private communication.
79. Felton, E. C., of Philadelphia, Pennsylvania. Private communication.
80. Ferraris, Erminio, of Monteponi, Sardinia. Private communication.

81. Firmstone, Frank, of Easton, Pennsylvania. Private communication.
82. Foote, A. D., of Grass Valley, California. Private communication.
83. Fried. Krupp, Grüsonwerk, of Germany. Private communication.
84. Gayford, Ernest, of Salt Lake City, Utah. Private communication.
85. Giroux, Joseph L., of New York City. Private communication.
86. Glückauf, Vol. XLIII., (1907), p. 657. Schennen, Begrat. Concerning Recent Improvements at the Clausthal Mines.
87. Gold Dredging in California, California State Mining Bureau, Bulletin No. 36, May, 1905. By Lewis E. Aubury.
88. Gold Dredging Machinery, Catalogue No. 17, sixth edition. The Risdon Iron Works, San Francisco, California.
89. Goodale, C. W., of Butte, Montana. Private communication.
90. Guess, H. A., of Silverton, Colorado. Private communication.
91. Guggenheimer, H. Randolph, of Denver, Colorado. Private communication.
92. Hamilton, L. C., of Telluride, Colorado. Private communication.
93. Hanchett, L., of Salt Lake City, Utah. Private communication.
94. Hanson, Henry, of Blair, Nevada. Private communication.
95. Hegardt, R., of Globe, Arizona. Private communication.
96. Herron, D. A., of Telluride, Colorado. Private communication.
97. Hofman, H. O., of Boston, Massachusetts. Private communication.
98. Horton, F. W., of Nome, Alaska. Private communication.
99. Hürter, C. S., of Wilmington, Delaware. Private communication.
100. Ingalls, Walter Renton, of New York City. Private communication.
101. *Inst. Min. & Met.*, Vol. XIV., (1904-1905), p. 3. Butters, Charles and Hamilton, E. W. On the Cyaniding of Ore at El Oro, Mexico, dealing principally with the re-grinding of sands.
102. *Ibid.*, Vol. XV., (1905-1906), p. 2. Dietzsch, F. "The Treatment of Tin-Wolfram Copper Ores at the Clitters United Mines."
103. *Iron Trade Review*, Vol. XXXIX., (December 6, 1906), p. 27. No author. "The Problem of Mining Sandy Ore at Coleraine."
104. Jackling, D. C., of Salt Lake City, Utah. Private communication.
105. Johnson, J. E., of Longdale, Allegheny County, Virginia. Private communication.
106. Kemp, J. F. "The Ore Deposits of the United States and Canada." Third edition, p. 150.
107. *Ibid.*, p. 300.
108. Kirby, A. G., of Goldfield, Nevada. Private communication.
109. Kirby, Edward B., of Flat River, Missouri. Private communication.
110. Koepel, E., of Beacon Hill, Michigan. Private communication.
111. Lemoine, L. R., of New York City. Private communication.
112. Leonard, R. W., of St. Catharines, Ontario, Canada. Private communication.
113. Livermore, T. L., of Boston, Massachusetts. Private communication.
114. Livingston, A. R., of Canon City, Colorado. Private communication.
115. Locke, C. E., of Boston, Massachusetts. Private communication.
116. Loughridge, Charles, of Denver, Colorado. Private communication.
117. MacGregor, Wallace, of Goldfield, Nevada. Private communication.
118. Main, A. F., of El Oro, Estado de Mexico, Mexico. Private communication.
119. Man, Albon P., of Richmond Hill, Borough of Queens, New York City. Private communication.
120. Manahan, Robert F., of Eustis, P. Q., Canada. Private communication.
121. Mathewson, E. P., of Anaconda, Montana. Private communication and a pamphlet by Members of the Staff of the Anaconda Copper-Mining Company entitled "A Brief Description of the Washoe Smelter."
122. McCarthy, James F., of Wallace, Idaho. Private communication.
123. McClave, James M., of Denver, Colorado. Private communication.
124. McCullock, J. R., of Columbia, Nevada. Private communication
125. Merrill, C. W., of Lead, South Dakota. Private communication.
126. Metallurgie, Vol. II., (1905), p. 154. No author. "New Central Mill of the Aktien Company, Vielle Montagne, Aachen, Prussia."
127. Miller, W. Clayton, of Spokane, Washington. Private communication.
128. Miller, William Exley, of 29 St. Andrew Square, Edinburg, Scotland. Private communication.
129. Mills, C. E., of Morenci, Arizona. Private communication.
130. *Min. Ind.*, Vol. XV., (1906), p. 858. Richards, Robert H. and Locke, Charles E., "Dressing Tin Ores."
131. *Mines & Minerals*, Vol. XXVI., (1906), p. 337. Palmer, Leroy A. "The Cactus Mill."
132. *Ibid.*, Vol. XXVII., (1907), p. 337. Scholl, George P. and Herrick, R. L. "The Gold Prince Mine and Mill."

133. *Ibid.*, p. 358. Ehle, Mark, Jr. "The Homestake Slime Plant."
134. *Min. Jour.*, Vol. LXXIX., (1906), pp. 380, 409, 615, 669, and 686. Allen, Robert. "Description of the Ore Reduction Plant & Process of Reduction on the Great Boulder Perseverance Gold Mine."
135. *Ibid.*, Vol. LXXXI., (1907), p. 861. Schennen, Begrat. "Recent Improvements at The Clausthal Mines."
136. *Mining Reporter*, Vol. LIV., (1906), p. 286. Staff correspondence. "Mills and Milling Practices at Tellurides, Colorado."
137. *Ibid.*, p. 341. Staff correspondence. "Mills and Milling Practices at Creede, Colorado."
138. *Min. & Sci. Press*, Vol. XC., (1905), p. 102. Staff correspondence. "Ore Washing in Cripple Creek, Colorado."
139. *Ibid.*, Vol. XCII., (1906), p. 240. Foote, A. D. "The Central Mill of the North Star Mines Company."
140. *Ibid.*, Vol. XCV., (1907), p. 21. Bosqui, F. L. "Cyanide Practice at the Homestake Mills."
141. *Mining World*, Vol. XXII., (1905), p. 460.
142. Mitchell, B. M., of the Robins Conveyor Belt Company, Passaic, New Jersey. Private communication.
143. Morse, P. S., of Cockle Creek, Boolaroo, New South Wales, Australia. Private communication.
144. Moulden, J. C. Private communication.
145. Nicholson, Frank, of Joplin, Missouri. Private communication.
146. Nutter, Edward H., of Telluride, Colorado. Private communication.
147. *Oest. Zeit.*, Vol. LII., (1904), p. 99. Merz, M. "Concerning the Concentration of Gold-Selenium-Silver Ores which Slime Badly and are Intimately Associated with the Gangue."
148. Packard, George A., of Wakefield, Massachusetts. Private communication.
149. Parsons, A. R., of De Lamar, Nevada. Private communication.
150. Pitkin, S. H., of the Wellman-Seaver-Morgan Company, Cleveland. Ohio. Private communication.
151. Placer Dredge Machinery. The Bucyrus Company, South Milwaukee, Wisconsin.
152. Potter, William C., of Aguascalientes, Mexico. Private communication.
153. Raymond, R. M., of El Oro, Estado de Mexico, Mexico. Private communication.
154. Ricketts, L. D., of Cananea, Sonora, Mexico. Private communication.
155. Root, Ralph, of Hazel Green, Wisconsin. Private communication.
156. Rowand, Lewis G., of Franklin Furnace, New Jersey. Private communication.
157. Schwarz, Charles E., of Desloge, Missouri. Private communication.
158. Shaw, Quincy A., of Boston, Massachusetts. Private communication.
159. Shepard, F. E., of the Denver Engineering Works Company, Denver, Colorado. Private communication.
160. Sherman, F. W., of Park City, Utah. Private communication.
161. Shields, J. W., of Hancock, Michigan. Private communication.
162. Smith, Charles S., of Boston, Massachusetts. Private communication.
163. Snow, F. W., of Great Falls, Montana. Private communication.
164. *S. Afric. Min. Review.*, Vol. I., (1907), No. 1.
165. Souther, J. G., of Oroville, California. Private communication.
166. Stannard, E. T., of Flat River, Missouri. Private communication.
167. *The Copper Handbook*, Vol. VII., (1907), Stevens, Horace J., p. 342. "Baltic Mining Company."
168. *Ibid.*, p. 418. "Calumet & Hecla Mining Company."
169. *Ibid.*, p. 467. "Champion Copper Company."
170. *Ibid.*, p. 647. "Greene Consolidated Copper Company."
171. *Ibid.*, p. 729. "Le France Copper Company."
172. *Ibid.*, p. 885. "Old Dominion Copper Mining & Smelting Company."
173. *Ibid.*, p. 898. "Osceola Consolidated Mining Company."
174. *Ibid.*, p. 926. "Pike Hill Mines."
175. *Ibid.*, p. 946. "Quincy Mining Company."
176. *Ibid.*, p. 1095. "Trimountain Mining Company."
177. The Hendrie & Bolthoff Manufacturing & Supply Company, Denver, Colorado. Private communication.
178. Thies, E. A., of Haile Gold Mine, North Carolina. Private communication.
179. Tracey, W. E., of Telluride, Colorado. Private communication.
180. Van Winkle, C. T., of Silverton, Colorado. Private communication.
181. Varian, J. P., of Rico, Colorado. Private communication.
182. Wall, E. A., of Salt Lake City, Utah. Private communication.
183. Walter, E. W., of Silverton, Colorado. Private communication.

184. Watt, A. P., of Bingham, Utah. Private communication.
185. Wheeler, A. E., of Great Falls, Montana. Private communication.
186. Wethey, A. H., of Butte, Montana. Private communication.
187. Wilcox, Herbert A., of Aspen, Colorado. Private communication.
188. Windsor, Rufus P., of Elkton, Colorado. Private communication.
189. Witherbee, F. S., of Port Henry, New York. Private communication.
190. Witherill, J. Price. Private communication.
191. Wood, Henry E., of Denver, Colorado. Private communication.
192. Yeatman, Pope, of New York City. Private communication.

CHAPTER XLII.

GENERAL IDEAS ON MILLING.

§ 1521. This chapter supplements Chapter XXI of Volume II. By reason of an article on costs contributed for the most part by J. R. Finlay who has given much careful study to this question the author is able to give the reader a rather more complete discussion of costs than that contained in Volume II. The remarks made upon pages 1085 to 1089 inclusive with regard to location of mills, mill sites, plant, and construction of mill buildings require no added comment.

Power.

§ 1522. For full details with regard to the source of power used in the mills the reader is referred to the description of the mills in the previous chapter. Upon page 1090 of Vol. II the statement is made that steam is the most common source of power in the mills. This now requires modification since the majority of the mills to-day are using electricity as the source of power. In some cases the power is supplied to a number of mills by a centrally located power plant. The larger mills usually have their own power plants generating electricity by steam or water power and transmitting the same to the several points where it is to be applied. There seems to be a growing tendency to run individual machines or groups of machines by separate motors. In general it may be said that the electric motor furnishes an ideal source of power, particularly for vanners and tables which require constant speed. The induction motor seems to be a favorite among mill men, possessing as it does the good qualities of constant speed, ease in starting, and comparative simplicity of construction.

§ 1523. Power Tests at Mill 173. — The question of the amount of power to run a mill is very important. L. D. Ricketts [15] decided upon the size and ordered the main driving engine for concentrator No. 2 of the Cananea Consolidated Copper Company, based on power measurements made at Nacozari in 1901. These memoranda covered measurements of power consumed by various machines. They were not completed and were mislaid. Later some fear arose that the engine, which was a Reynolds-Corliss, 16 and 32 × 36-inch stroke, designed to run at 100 revolutions per minute with 140 pounds of steam pressure at the throttle, might overload. Careful measurements of the power consumed by the machines in concentrator No. 1 were therefore made in order to decide whether or not the engine would be powerful enough.

These figures are most valuable and interesting and are published here with the kind permission of David Cole, the superintendent. It should be remembered that the Cananea ores are very soft and easily crushed and one would have to allow more power on hard ores. This increase according to the hardness of the ore is not, however, excessively large as it only applies to crushing machinery and in all cases a large part of the power used is taken up in friction. These tests were made as far as possible using an electric motor for driving.

§ 1524. *Rolls.* — It was found impossible to attach the motor to the rolls without a great deal of preparation in the way of a counter-shaft to reduce the speed, which would also lead to interruptions in the mill work. By indicating the engine, therefore, the following results were obtained:

Section A with regular load ..... 171.7 horse-power.
Sections A and B with regular load ..... 333.4 " "

Both of these figures include the power used in the engine room itself, that is, friction of the engine, driving belt, idler, and the short jack shaft between the clutches driving each section of the mill. This engine-room friction was found to be 50 horse-power, and we deduce the following:

Sections A and B with engine-room friction out ..... 283.5 horse-power.
" A alone " " " " " ..... 121.5 " "

" B " " " " " ..... 162.0 " "
All machinery in Section B, excepting rolls, require ..... 131.0 " "

Leaving for 1 set of 36-inch rolls and 2 sets of 27-inch rolls ..... 31.0 " "

Say 11 horse-power for the 16 × 36-inch rolls and 20 horse-power for the 2 sets of 14 × 27-inch rolls. The speed of the rolls was as follows:

16 by 36-inch Davis rolls ..... 70 revolutions per minute.
14 by 27 " " " ..... 120 " " "

§ 1525. *Five-foot Bryan Mills.* — Standard Risdon Iron Works 5-foot machine, in good working order, tires and die about half worn out, gears in good condition. All parts well lubricated. Table 553 gives the results obtained in this test.

TABLE 553. — POWER REQUIRED FOR 5-FOOT BRYAN MILL AT CONCENTRATOR NO. 1, MILL 173.

Mill Running Empty.		Mill Running with Regular Feed.		Mill Running with Extra Heavy Feed.	
Revolutions per Minute.	Horse-power.	Revolutions per Minute.	Horse-power.	Revolutions per Minute.	Horse-power.
35	6.50	36	14.80	36	17.50
37	9.00	38	17.28	40	21.36
.....	.....	39	18.00*	.....	.....

* 18 horse-power at 36 revolutions per minute is a good figure to use.

§ 1526. *No. 1 Elevator.* — Forty-six feet from center of top to center of bottom pulley. Belt 18 inches wide and 10 ply with 8 × 16-inch malleable-iron buckets 24 inches apart. Head pulley 44 inches in diameter running at 40 revolutions per minute equals a belt speed of 460 feet per minute.

Elevator running empty requires ..... 2.10 horse-power
When carrying 700 pounds of water and 700 pounds of ore requires ..... 6.52 " "

§ 1527. *Trommels.* — Speed 20 revolutions per minute. Four, 4 × 5 feet, and four 4 × 8 feet, with shafting, pinion shaft, 84 feet of $2\frac{11}{16}$-inch shafting in 14 ring-oiling ball and socket pillow-blocks. Shaft running at 60 revolutions per minute. Then the horse-power for the 8 machines is:

Pinion Shaft.	Trommels Empty.	Trommels Loaded.
1.28 horse-power.	3.73 horse-power.	3.83 horse-power.

§ 1528. *Jigs.* — The power required for operating the jigs is shown in Table 554.

TABLE 554. — POWER REQUIRED FOR JIGS AT MILL 173.

Material Handled.	1-Compartment Bull Jig. Oversize from ⅜-inch Screen.	2-Compartment Jig. Oversize from ⅛-inch Screen.	3-Compartment Sand Jig. 1st Hydraulic Size on 2.5 mm. Feed.
Screens	24 by 40 inches	24 by 36 inches	24 by 36 inches
Plungers	21 by 40 "	21 by 35 "	21 by 35 "
Stroke	2¼ "	1 "	⅝ "
Strokes per minute	115 "	170 "	200 "
Depth of bed	8 "	4 "	average 4 inches
Screen cloth	5 mesh 12 wire	5 mesh 14 wire	5 mesh 14 wire
Horse-power at full feed	2.10	1.00	1.10
" " " no "	2.05	.....	.....

§ 1529. *Wilfley Tables, Style* 4, *without Sand Wheels.* — Eight tables, 105 feet of 1 7/8-inch shafting in 18 ring-oiling ball and socket pillow-blocks including 1 right-angle miter-gear driven shaft 18 feet long and 2 belted counters of short length with 2 bearings each. All shafting running at 160 revolutions per minute.

Horse-power for Above Conditions.

8 tables with drive belts on loose pulleys require ..... 4.00 horse-power.
8 " running 238 strokes per minute require ..... 4.82 " "

§ 1530. *Eighteen* 6-*foot Frue Vanners,* with 180 feet of 1 7/8-inch line shafting in 29 ring-oiling ball and socket pillow-blocks, running at 200 revolutions per minute approximately. Power required with 18 machines running at 190 revolutions per minute, 3.77 horse-power.

Power required with 18 machines running at 196 revolutions per minute, 4.12 horse-power.

§ 1531. *Centrifugal Pumps.* — One No. 7 Krogh centrifugal pump, running at 604 revolutions per minute, handling approximately 900 gallons per minute, 39 feet high, used 20 horse-power.

Another No. 7 Krogh centrifugal pump, running at 575 revolutions per minute, handling 174 gallons per minute, 36 feet high, used 12.35 horse-power.

The above figures in the results with the centrifugal pumps are, of course, unsatisfactory and not to be greatly depended upon.

§ 1532. The calculated power required in concentrator No. 1 on the basis of the above is shown in Table 555 (see page 1930). Table 556 gives the power as calculated for concentrator No. 2.

TABLE 556. — COMPUTED POWER REQUIRED FOR CONCENTRATOR NO. 2, MILL 173.

	Horse-power.
20 Trommels, 4 by 5 feet and 4 by 8 feet	10
4 16-inch elevators which are 46 feet between pulley centers	20
4 Sets 16 by 36-inch rolls at 80 revolutions per minute	44
6 One-compartment bull jigs (4 active)	8
16 Two-compartment middle jigs	16
16 Three " sand jigs	16
2 Unwatering trommels	1
2 Chip trommels	1
10 Shovel wheels with shafting	3
2 Centrifugal pumps, 1200 gallons per minute, 40-foot lift	60
8 5-foot Bryan mills	144
38 Wilfley tables with line shafting	25
36 6-foot Frue vanners with line shafting	8
2 Centrifugal pumps	25
6 Shaking launders	3
2 Middling elevators	5
2 Pulp elevators	3
Friction of engine and remaining shafting	80
Total on mill engine	472

TABLE 555. — CALCULATED POWER REQUIRED FOR CONCENTRATOR NO. 1, MILL 173.

	Horse-power.
24 Trommels	12
2 Number 1 elevators	13
2 " 2 "	14
2 " 3 "	8
2 " 4 "	8
8 Bull jigs (4 active)	8
16 Two-compartment jigs	16
8 Three " "	8
2 Bryan mills	36
2 Number 1 centrifugal pumps	40
2 Shaking launders and 2 shovel wheels	2
2 16 by 36-inch Davis rolls	22
4 14 by 27 " " "	40
Shafting and belts not previously included	40
Engine and jack-shaft friction	50
Total engine load	317
42 Wilfley tables	26
36 6-foot Frue vanners	8
2 10 by 48-inch sand pumps	3
1 Number 2 centrifugal pump	15
Friction of transmission	13
Total load on motor-driven machinery	65
Total engine load	317
Total power required in mill	382

§ 1533. POWER REQUIRED AT MILL 162. — At Mill 162 [9] careful tests have been made to ascertain the power required by concentrating machines, with the results shown in Table 557.

TABLE 557. — POWER REQUIRED FOR CONCENTRATING MACHINERY AT MILL 162.

Machine.	Revolutions per Minute.	Horse-power Required.
Hancock jig	62	3.41
Evans jig	190	0.50
Trommel 3x6 feet	.....	0.30
Overstrom table	251	0.364
Wilfley table	251	0.352
Vanner 4 foot	182	0.230

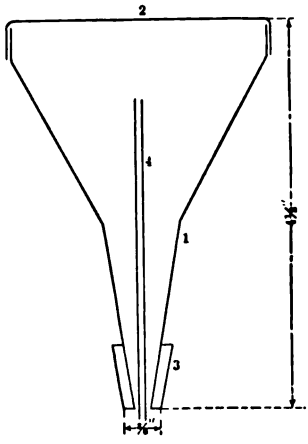

FIG. 851. — LUBRICATING DEVICE FOR JOURNALS.

In connection with the power question attention is called to pages 1093 to 1096 inclusive of Vol. II., where the questions of belting, rope transmission, etc., are taken up.

§ 1534. LUBRICATION AND CARE OF JOURNALS. — The question of lubrication has been very thoroughly discussed in Vol. II., pages 1097 to 1098 inclusive. The author wishes to call attention to a very simple and efficient device for the lubrication of journals that has recently come to his attention. (See Fig. 851.) The tin funnel (1) is provided with a cover (2). The funnel is fitted into a wooden plug (3) which in turn fits into the oil hole in the journal. The copper wire (4) passes down through the funnel as shown in the cut. Keystone grease of about the consistency of vaseline is used in these cups. The moment the journal begins to heat the heat is conducted by the copper wire (4) up into the grease which is in the funnel, melting the grease

so that it runs down into the bearings. In some cases where the cups are liable to fall off, the oil-hole in the journal may be tapped out and the funnel soldered to a nipple screwing therein. Journals thus equipped will run for several weeks without requiring attention.

§ 1535. LIGHTING. — For artificial light the incandescent electric light is almost universal. The Nernst lamp is finding its way into the mills to a limited extent (see Mill 171), as is also the Cooper-Hewitt lamp or mercury arc. Both of the latter are very satisfactory where it is necessary to judge by the eye of the work done by machines, *i.e.*, in jigging mills. At Mill 152 [6] a special form of arc lamp, the light of which is especially rich in the so-called ultra-violet rays, is used to enable the mill man to judge of the amount of willemite in the jig tailings. Willemite is rendered phosphorescent under the influence of the ultra-violet rays.

§ 1536. LABOR IN THE MILLS. — Figures regarding labor in the mills will be found in the preceding chapter, under the description of the various mills.

§ 1537. WATER CONSUMPTION. — Among the Lake Superior mills [2] the quantity of water used per ton of rock is large. This is required to assist in the discharge from the stamps and to convey the crushed material through the large number of classifiers and jigs. At Mill 182 two pumps furnish 28,000,000 gallons of water per 24 hours, or 3,500,000 gallons per stamp per 24 hours. Thus for each ton of rock crushed 30 tons or 7,200 gallons of water is required. The consumption of water in Mill 177 was formerly about 2,500,000 gallons of water per stamp per 24 hours, or 33 tons of water per ton of ore stamped. It has since been reduced to 1,125,000 gallons [12] per stamp per 24 hours, or 15 tons of water per ton of ore crushed. This has been accomplished by use of the mortar jig, by aid of the jig classifier, and by a marked decrease in number and increase in the efficiency of the jigs in use at the mills.

In the Montana copper-sulphide mills [4] the water consumption is also large. In two of the large mills using the same general methods of concentration one saves water for return to the mill circulation at only one point and uses 7,680 gallons or 32 tons of water per ton of ore crushed, while the other saves water at three places and uses 6,240 gallons or 26 tons per ton of ore crushed.

In parts of Arizona and Northern Mexico, where water is scarce, every precaution has to be taken to prevent waste. The water for Mill 173 is pumped 9 miles against a head of 900 feet. The water consumption is approximately 335 gallons or 1.4 tons per ton of ore crushed. The water from the coarse jigs is collected and used on the middlings, is again collected and used on the sands, and then goes back to the coarse jigs. From the Wilfley tables 87.5% of the water is recovered.[1]

The water for Mill 172 is pumped from the San Francisco River, 7 miles away, against a head of 1,500 feet, and stored above the mill in storage tanks of 500,000 gallons capacity. The water costs somewhat less than 20 cents per 1,000 gallons. Mill 172 [3] is concentrating 1 ton of ore with every 300 gallons or 1.25 tons of water added to the mill circulation. The Longfellow concentrator consumes about 150 gallons of water per minute, or, roughly, 600 gallons or 2.50 tons per ton of ore crushed. The Shannon concentrator uses approximately 550 gallons or 2.31 tons of water per ton of ore crushed. The tailings from the mills are allowed to settle in elaborate systems of tanks and the clarified water is pumped back again into the mill.

At Mill 108 [5] by using conical tanks (see § 1151), the water consumption is under 40 gallons of solution per ton of ore treated.

Table 558 has been prepared to show the water consumption in the mills. Further details will be found in the preceding chapter under the discussion of the various mills. Where water is plenty the tendency is to use it lavishly,

often with injury to the mill work. On the other hand, in dry regions it has been found possible to get along with a very little water. The attempt to get along with the least possible amount of water has brought about many of the more recent improvements and refinements of ore-dressing processes.

TABLE 558. — WATER CONSUMPTION IN THE MILLS.

Mill Number.	Water Used per 24 Hours.	Capacity Mill per 24 Hours.	Water Used per Ton of Ore.		Remarks.
	Gallons.	Tons.	Gallons.	Tons.	
Gold Stamp Mills.					
98	360,000	150	2,400	10	60 stamps.
Jigging Mills.					
125	2,160,000	400	5,400	22.5	
126	4,000,000	1,200	3,333	13.9	
127	5,760,000	1,800	3,200	13.3	
128	864,000* / 69,000	575	1,500* / 120	6.26 / 0.5	Australian practice
132	504,000* / 57,600	500	1,008* / 144	4.2 / 0.6	
139	2,001,600* / 338,400	600	3,336* / 567	13.9 / 2.36	
144	1,885,000	325	5,800	24.2	
Iron-Ore Washery.					
154	300,000a	1,000a	300	1.25	
155	1,144,800	480	2,385	10	
Montana Copper-Sulphide Mills.					
161	44,352,000	8,800	5,040	21	
162	25,000,000	3,000	8,300	34.6	
Utah Copper-Sulphide.					
166	1,440,000* / 720,000	1,000	1,440* / 720	6.00 / 3.00	
167	8,640,000	6,000	1,440	6	
Nevada Copper-Sulphide.					
169	800,000* / 160,000	800	1,000* / 200	4* / 0.83	
Arizona Copper.					
172	275,000	1,100	250	1.04	
174	750,000	500	1,500	6.26	

* In mill circulation. *a* 10 hours.

§ 1538. PERCENTAGE OF EXTRACTION. — Table 559 (see page 1934) shows the average extraction obtained in certain of the mills described in this volume. For further discussion of the factors governing extractions the reader is referred to Vol. II., page 1117 and following.

SCHEDULES FOR CALCULATING THE VALUE OF ZINC ORES.

§ 1539. FACTS ON WHICH THE VALUE OF ZINC ORES DEPENDS. — The value of a zinc ore depends upon many considerations;[11] chiefly, however, upon its tenor in zinc and objectionable impurities such as iron, manganese, and lime

which cause corrosion of the retorts, lead and antimony which contaminate the spelter, fluorspar [10] which attacks the acid chambers when the ore is roasted for the purpose of making sulphuric acid, and arsenic which affects the quality of the acid and contaminates the spelter. The value of the ore is also affected by its character, whether oxide or sulphide, and by its physical character, lump ore necessitating the expense of further crushing, and slimes being more expensive to treat than coarser concentrates.

§ 1540. TREATMENT CHARGE. — In determining the treatment charge on the ore purchased,[11] the smelter starts with the cost of smelting a ton of ore of average composition such as he intends feeding to his furnaces, to this he adds interest on his investment, a proper allowance for amortization of his plant, freight upon the ore to his works and on the spelter product to its market with allowances for the cost of buying the ore and selling the spelter. This gives the "returning charge" which the smelter must make in buying ore f. o. b. at the mine or mill where produced. The "returning charge" does not include ocean freights from Boston to Antwerp, which in 1904 were $4.70. The "returning charge" on Colorado ores, shipped by the way of Galveston, includes all rail and ocean freight rates.

§ 1541. FOREIGN SCHEDULES. — European smelters [11] buy ore in accordance with a sliding scale, which combines three elements, viz: the price of spelter and the zinc content of the ore, which are variables, and the "returning charge" per ton of ore, which is fixed. American smelters compute the value in practically the same way, but in buying a lot usually make a direct bid of so much per ton, or, when purchasing by contract, frequently employ a sliding scale which, while equally fair, is less simple than the European method.

The smelters of Belgium, Holland, France, and the west of Germany employ the formula $V = 0.95\,P\,\frac{T-8}{100} - R$ in which P is the price of spelter (good ordinary brands) at London, T the units of zinc in the ore, and R the "returning charge" per ton of 1,000 kilograms. This formula gives the price of ore per ton of 1,000 kilograms.

The formula works out as follows in the case of an ore assaying 48% zinc, the London price of spelter being assumed at £20 per ton of 2,240 pounds, and the returning charge £2 − 12s. − 6d. per ton of ore.

$$0.95P = 0.95 \times £20 = £19.0$$
$$\frac{T-8}{100} = 0.48 - 0.08 = 0.40$$
$$R = £2 - 12s. - 6d. = £2.625$$
$$£19.0 \times 0.40 - £2.625 = £4.975 = \$24.18$$

The same problem could be worked out equally well in dollars and cents.

The "returning charges" which have been made by European smelters on American, Australian, and Canadian ores during the last few years have ranged from $11.40 to $13.16 per 2,000 pounds.

§ 1542. WESTERN ZINC ORE PRICES. — The Western smelters of the United States, in their ore contracts, employ sliding scales of the following character:

(1). *Basis of Settlement.* — Ore delivered at smelting points in Kansas. When spelter is at 6 cents per pound [11] at St. Louis, pay $25 per ton of 2,000 pounds for ore containing 47% zinc, plus 75 cents per unit for zinc in excess of 47 units, less 75 cents per unit for zinc below 47 units; with 35% of the variation in the price of spelter.

(2). *Basis of Settlement.* — Ore delivered f. o. b. cars at mines. When spelter is at 6 cents per pound [11] at St. Louis, pay $24.50 per ton of 2,000 pounds

TABLE 559. — SHOWING CHARACTER OF ORE AND GANGUE, PERCENTAGE OF EXTRACTION, AND LIMITS OF CONCENTRATION.

Mill No.	Principal Values.	Principal Gangue.	Average Feed.	Average Percent Extraction.	Largest Size of Concentrates Saved.	Largest Size of Tailings Discarded.	Maximum Grain in the Finest Size to which Middlings are Re-crushed.
95	Gold	Quartz and granite			28.58 mm	28.58 mm	Re-crushed in breaker to 25.4 mm.
96	"	Quartz and diabase	$12.40	79.0 gold (*c*) 96.0 " (*b*)	0.64 mm	0.64 mm	No re-crushing.
97	"	Quartz and slate	$ 2.85	87.0 (*a*) gold	0.58 mm	0.58 mm	" "
98	"	Siliceous	$ 3.00	75.0 (*a*) "	0.37 mm	0.37 mm	" "
99	Gold and silver	"	$27.50 gold 12.37 oz. silver	71.0 gold 50.0 silver			Re-crushed in grinder.
100	" " "	Quartz		93.5 gold (*b*)	0.6 mm	0.6 mm	Re-crushed in Huntington mills to about 0.40 mm.
101	" " "	Silicified dacite	$31.30 (*a*)	94.0 (*a*) gold and silver (*b*)	0.86 mm	0.86 mm	Re-crushed in tube mills to about 0.10 mm.
102	" " "	Variable	Variable	Variable	Variable	Variable	Re-crushed in tube mills to 0.14 mm.
103	" " "	Quartz-calcite	$10.00 (*a*)		0.97 mm	0.97 mm	Re-crushed in tube mills.
104	" " "						No re-crushing.
105	" " "	Schists and quartz	$12.66	29.4 gold and silver (*c*) 91.5 " " " (*b*)	1.09 mm	0.49 mm	Re-crushed in grinding pans.
106	Gold	Quartz and mica schist or slate		75.0 gold (*c*) 95.0 " (*b*)	0.56 mm	0.56 mm	No re-crushing.
107	"	Quartz pebble conglomerate	$ 7.11	92.1 " (*b*)			Re-crushed in tube mills.
108	"	Quartz pebble conglomerate		46.9 " (*d*) 95.3 " (*b*)			Re-crushed in tube mills to about 0.10 mm.
109	"	Quartz pebble conglomerate	$ 9.83	94.9 " (*b*)			Re-crushed in tube mills.
110	"	Quartz pebble conglomerate					" " " "
111	" (dredge)	Quartz	$ 0.25	56.0 " (*d*)	4.76 mm	31.75 mm	No re-crushing.
112	"	Trachyte, porphyry, and greenstone	$ 4.06 (*a*)	84.0 " (*d*)	0.30 mm	0.30 mm	" "
113	Gold and silver	Quartz and feldspar	$ 6.00	85.0 gold and silver (*d*)	0.80 mm (*a*)	0.80 mm. (*a*)	" "
114	" " "	Quartz	$10.00 (*a*)		0.86 mm	0.86 mm	" "
115	" " "	"		82.5 gold (*d*) 45.0 silver (*d*)	0.40 mm. (*a*)	0.40 mm. (*a*)	" "
116	" " "	"			0.40 mm .(*a*)	0.40 mm. (*a*)	" "
117	" " "	"	$ 7.44 gold 33.00 oz. silver	12.75 (*e*) 76.85 (*b*) gold 21.00 (*e*) 69.50 (*b*) silver	1.30 mm. (*a*)	1.30 mm. (*a*)	Re-crushed in Huntington mills to about 0.50 mm.
118	" " "	Siliceous		95.1 gold (*b*) 81.7 silver (*b*)	0.50 mm. (*a*)	0.50 mm. (*a*)	Re-crushed in tube mills.
119	Silver	Slate conglomerate and calcite			19.05 mm	9.53 mm	Re-crushed in stamps to about 0.50 mm.
120	Silver and lead	Siderite and quartz			36.00 mm	36.00 mm	Re-crushed in Huntington mill to about 0.80 mm.
121	" " "	Quartzite and quartz			25.40 mm	25.40 mm	Re-crushed in Huntington mill.
122	" " "	Siderite and quartz			0.50 mm. (*a*)	0.50 mm. (*a*)	No re-crushing.
123	" " "	Quartz and Bullt	7.0 oz. silver 10.0 percent lead		25.00 mm	25.00 mm	Re-crushed in Huntington mill to about 0.50 mm.

124	Silver and lead	Limestone	0.13 oz. silver 5.9 percent lead	60.7 silver 83.1 lead	9.00 mm	7.00 mm	Re-crushed in Huntington mill to about 1.45 mm.
125	" " "	Dolomite and quartz	6.5 oz. silver 4.3 percent lead	55.6 silver 81.9 lead	20.00 mm	13.00 mm	Re-crushed in Huntington mills.
126	Lead	Limestone			9.00 mm	9.00 mm	Re-crushed in Huntington mill.
127	"	Dolomite	5.5 percent lead	80.0 lead (*a*)	8.00 mm	8.00 mm	Re-crushed in Huntington mills to 0.46 mm.
128	Silver, lead, and zinc	Rhodonite and rhodochrosite			3.18 mm	3.18 mm	Re-crushed in ball mills to about 0.60 mm.
129	" " " "	Quartz and rhodonite		67.3 lead	2.38 mm	2.38 mm	Re-crushed in ball mills to about 0.56 mm.
130	" " " "	" " "	12.5 oz. silver 15.5 percent lead 19.0 percent zinc	62.3 silver (*a*) 76.8 lead (*a*) 72.4 zinc (*a*)	3.18 mm	3.18 mm	Re-crushed in grinding pans to about 0.75 mm.
131	Silver, lead, and zinc	Limestone and quartzite	7.0 oz. silver 10.0 percent lead 9.0 percent zinc	47.9 silver (*a*) 59.8 lead (*a*) 61.9 zinc (*a*)	7.80 mm. (*a*)	3.68 mm	Re-crushed in Huntington mills to about 1.00 mm.
132	" " " "	" " "	11.3 oz. silver 4.5 percent lead 5.2 percent zinc	77.5 silver 95.0 lead 50.0 zinc	8.20 mm	3.30 mm	Re-crushed in Sherman mills to about 1.80 mm.
133	" " " "	Slate and siderite			25.40 mm	20.00 mm	Re-crushed in high-speed rolls.
134	" " " "	" " "					Re-crushed in high-speed rolls.
135	" " " "	Rhodonite, quartz, and rhodochrosite	7.0 oz. silver 5.0 percent lead 19.0 " zinc		2.50 mm	2.50 mm	No re-crushing.
136	" " " "	Quartzite					Re-crushed in Huntington mills.
137	" " " "	Limestone and barite			30.00 mm. wet 8.00 mm. dry	30.00 mm. wet 8.00 mm. dry	Re-crushed in ball mill to 8.00 mm. in wet mill. No re-crushing in dry mill.
138	" " " "	Porphyry and limestone	11.0 oz. silver	76.0 silver and lead	2.00 mm	2.00 mm	Re-crushed in rolls to 1.25 mm.
139	Gold, silver, lead, and zinc	Quartz	0.05 oz. gold 10.0 " silver 8.0 percent lead 8.0 " zinc		8.00 mm	1.50 mm	Re-crushed in Huntington mills to 1.50 mm.
140	" " " " "	"			0.80 mm. (*a*)	0.80 mm. (*a*)	No re-crushing.
141	" " " " "	"			3.05 mm. (*a*) wet 1.07 mm. dry	3.05 mm. (*a*) wet 1.07 mm. dry	Re-crushed in rolls in wet mill. No re-crushing in dry mill.
142	" " " " "	Trachyte and quartz	$ 4.00 gold and silver 11.0 percent lead 5.0 " zinc		4.30 mm. (*a*)	0.80 mm. (*a*)	Re-crushed in Chili mills to about 0.80 mm.
143	Gold, silver, lead, and copper	Quartz and rhodonite	$12.00 (*a*)	25.0 gold and silver (*c*) 75.0 gold, silver, and lead (*d*)	0.51–0.97 mm	0.51–0.97 mm.	Re-crushed in tube mills to 0.23 mm.
144	" " " " "	Quartz and rhodochrosite		88.0 gold 79.0 silver 84.0 lead 79.0 copper	Variable	Variable	Re-crushed in Chili mills.
145	Lead and zinc		9.1 percent lead 15.4 " zinc	74.3 lead 74.7 zinc	18.00 mm	18.00 mm	Re-crushed in ball mills.

TABLE 559. — SHOWING CHARACTER OF ORE AND GANGUE, PERCENTAGE OF EXTRACTION, AND LIMITS OF CONCENTRATION.

(*Continued*)

Mill No.	Principal Values.	Principal Gangue.	Average Feed.	Average Percent Extraction.	Largest Size of Concentrates Saved.	Largest Size of Tailings Discarded.	Maximum Grain in the Finest Size to which Middlings are Re-crushed.
146	Lead, zinc, and iron	Dolomite	5.8 percent lead 22.0 " zinc	76.0 zinc	12.00 mm	22.00 mm	Re-crushed in high-speed rolls.
147	" " " "	Limestone	3.7 " lead 21.4 " zinc 17.9 " iron	85.0 zinc	22.00 mm	22.00 mm	Re-crushed in Huntington mill to 1.00 mm.
148	Lead, zinc, and iron	Limestone	1.0 " lead 9.0 " zinc 9.5 " iron		9.53 mm. wet 6.35 mm. dry	12.70 mm. wet 6.35 mm. dry	Re-crushed in rolls in wet mill. No re-crushing in dry mill.
149	Lead, zinc, and copper	Quartzose			0.50 mm. (*a*)	0.50 mm. (*a*)	No re-crushing.
150	" " " "	Schists, quartz, and limestone	5.8 percent lead 10.2 " zinc 0.1 " copper	46.9 lead 35.4 zinc	32.00 mm	22.00 mm	Re-crushed in roller mills to 1.00 mm.
151	" " " "	Siliceous limestone			0.60 mm. (*a*)	0.60 mm. (*a*)	No re-crushing.
152	Zinc and manganese	Calcite and biotite			2.77 mm. wet 4.75 mm. dry	2.77 mm. wet 2.77 mm. dry	" " in wet mills. Re-crushed in rolls to 0.43 mm. in dry mill.
153	Iron and manganese		31.9 percent iron 6.8 " manganese	74.1 iron 73.9 manganese	15.00 mm	15.00 mm	No re-crushing.
154	Iron	Taconyte	41.00 " iron	82.9 iron	9.53 mm		" "
155	"	Clay, shale, sandstone, and pebbles	30.0 " "	88.0 "	50.80 mm	4.75 mm	" "
156	"	Hornblende			88.90 mm	44.45 mm	" "
157	"	Granite	39.0 percent iron	85.6 iron	63.50 mm	63.50 mm	Re-crushed in rolls.
158	"	Apatite, hornblende, gneiss, etc.	52.0 " iron, Mill 1. 57.0 " " " 2.	95.4 " Mill 1 97.7 " " 2	50.80 mm., Mill 1 9.53 mm. " 2	Mill 1 1.00 mm. " 2	" " " Mill 1. " " " " 2.
159	Iron and copper	Limestone and sandstone slate	42.0 " " " 0.45 " copper	94.3 " 33.3 copper	1.50 mm., iron mill 5.00 mm., copper mill	5.00 mm., iron mill 1.50 mm., copper mill	Re-crushed in ball mill to 1.50 mm.
160	Gold and copper	Quartz	3.5 " "	82.0 copper (*a*)	25.40 mm	2.00 mm	Re-crushed in Chili mills to 1.50 mm.
161	Gold, silver, and copper	Quartz and granite			38.10 mm	1.50 mm	Re-crushed in Huntington mills to 1.00 mm.
162	" " " "	" " "	1.19 oz. silver 3.4 percent copper	82.1 silver 83.1 copper	38.10 mm	2.50 mm	Re-crushed in Huntington mills to 1.25 mm.
163	" " " "	Granitic	2.81 oz. silver 2.8 percent copper	74.3 silver 77.8 copper			No re-crushing.
164	" " " "	Quartz and feldspar	Variable	Variable	50.80 mm	3.00 mm	Re-crushed in Chili mills.
165	" " " "	Porphyry	0.03 oz. gold 0.5 " silver 1.75 percent copper		0.50 mm	0.50 mm	No re-crushing.
166	" " " "	Granite	$2.00 gold and silver 4.0 percent copper	82.5 copper	15.88 mm	3.50 mm	Re-crushed in rolls to 3.50 mm.
167	" " " "	Porphyry	0.015 oz. gold 0.15 " silver 2.0 percent copper		2.24 mm	2.24 mm	Re-crushed in Chili mills to 0.60 mm.

168	Gold, silver, and copper	Siliceous	3.1 percent copper		1.50 mm	1.50 mm	Re-crushed in rolls to 0.50 mm.
169	" " " "	Talcose-quartz	3.0 " "	86.7 all values	4.00 mm. (*a*)	0.80 mm. (*a*)	Re-crushed in Chili mill to about 0.80 mm.
170	" " " "	Quartz and porphyry	0.01 oz. gold 0.2 " silver 2.9 percent copper		7.94 mm	2.00 mm	Re-crushed in Huntington mills to about 0.80 mm.
171	" " " "	Siliceous	3.25 " "	78.0 copper	31.75 mm	1.00 mm	Re-crushed in Huntington mills to about 1.00 mm.
172	" " " "	"	3.25 " "		25.40 mm	2.50 mm	Re-crushed in Chili mills to about 1.50 mm.
173	" " " "	Siliceous and talcose	3.9 " "	82.0 copper (*a*)	25.40 mm	2.00 mm	Re-crushed in Bryan mills to about 1.50 mm.
174	" " " "	Siliceous porphyry	3.5 " "	82.0 copper (*a*)	19.05 mm	2.50 mm	Re-crushed in Chili mills to 1.07 mm.
175	Copper and sulphur	Quartz and limestone	2.5 " 45.0 " sulphur		3.25 mm	3.25 mm	No re-crushing.
176	Copper	Siliceous	3.0 " copper	66.7 copper	0.80 mm. (*a*)	0.50 mm. (*a*)	" "
177	"	Rhyolite conglomerate	2.0 " " (*a*)		88.90 mm	6.35 mm. amygdaloid 4.76 mm. conglomerate	Re-crushed in Chili mill.
178	"	Amygdaloid		80.0 copper		6.35 mm	Re-crushed in Huntington mill to 1.00 mm.
179	"	"			152.40 mm	15.88 mm	Re-crushed in Chili mill to 1.00 mm.
180	"	"			88.90 mm	6.35 mm	Re-crushed in stamps to 6.35 mm.
181	"	"				4.76 mm	Re-crushed in rigid rolls.
182	"	"			50.80 mm	6.35 mm	" " Chili mill.
183	Pyrite	Slate			2.79 mm	2.79 mm	" " rolls.
184	"		15.9 percent pyrite	85.0 pyrite	1.00 mm	1.00 mm	No re-crushing.
185	Tin and Tungsten	Quartzose granites	1.23 " tin	89.1 tin and tungsten	0.60 mm. (*a*)	0.60 mm. (*a*)	Re-crushed in ball mills to about 0.50 mm.
186	Asbestos	Hornblende and serpentine rocks					Re-crushed in emery mill.
187	Mercury						" " crusher to 5.00 mm.
188	Diamonds	Porphyritic peridotite		98.0 diamonds			Puddled.

(*a*) About. (*b*) Including recovery by lixiviation. (*c*) By amalgamation. (*d*) By amalgamation and concentration. (*e*) By concentration.

for ore containing 53% zinc, plus $1 per unit for zinc in excess of 53 units, less $1 per unit for zinc below 53 units; with 42.5% of the variation in spelter.

If we take the latter example, the meaning is that when spelter is worth 6 cents per pound at St. Louis, ore assaying 53% zinc is worth $24.50 f. o. b. mine. Ore assaying 54% zinc is worth $25.50; ore assaying 52% zinc is worth $23.50. A variation in the price of spelter changes the basis price to the extent of 42½% of the variation per ton of spelter; that is, if the price for spelter be 4.5 cents per pound at St. Louis, a reduction of 1.5 cents per pound (or $30 per ton) from 6 cents, or $30 × 0.425 = $12.75, is taken from the basis price of the ore, wherefore the value of ore containing 53% zinc becomes $12.75. Ore with 54% zinc is then worth 13.75, etc.

The following schedules for calculating the value of zinc ores in the San Juan, Leadville, Montezuma, and Breckenridge districts of Colorado are in actual use by the operators to-day.[7]

No. 1. — Value of ore per ton equals $[0.95\ P\ (T - 8) \div 100] - R$, in which P is the value of spelter per ton; T is the percent of zinc in the ore; R is the returning charge per ton, here used as $15.98 for all grades of ore carrying from 35 to 45% zinc.

No. 2. — Value of ore per ton is $20.50 for 40% zinc, basis of $6 spelter, $1 per unit of zinc up or down, variations as follows as price of spelter per ton varies:

35–36	percent zinc add or deduct.				20	percent variation spelter value.			
36–37	"	"	"	"	21	"	"	"	"
37–38	"	"	"	"	22	"	"	"	"
38–39	"	"	"	"	23	"	"	"	"
39–40	"	"	"	"	24	"	"	"	"
40–41	"	"	"	"	25	"	"	"	"
41–42	"	"	"	"	26	"	"	"	"
42–43	"	"	"	"	27	"	"	"	"
43–44	"	"	"	"	28	"	"	"	"
44–45	"	"	"	"	29	"	"	"	"
45–46	"	"	"	"	30	"	"	"	"

No. 3. —Value per ton of ore, $15.50 for 35% zinc, basis $6 spelter with variation of 6 cents per ton up or down for each variation of 1% in market quotation per 100 pounds spelter, and $1 per unit up or down for each variation of 1% in zinc contents.

No. 4. — Value of ore per ton equals $(13 \times T \times P) - R$, in which T is the units zinc in ore; P is the St. Louis quotation spelter per pound; R is the returning charge per ton, here used as $15 for all grades.

No. 5. — Value per ton, $7.60, basis $6 spelter for 30% zinc with variations of 60 cents per unit zinc up or down, also variations as follows as price of spelter per ton varies:

26–27	percent zinc add or deduct.				10	percent variation spelter value.			
27–28	"	"	"	"	11	"	"	"	"
28–29	"	"	"	"	12	"	"	"	"
29–30	"	"	"	"	13	"	"	"	"
30–31	"	"	"	"	14	"	"	"	"
31–32	"	"	"	"	15	"	"	"	"
32–33	"	"	"	"	16	"	"	"	"

No. 6. — Value per ton, the same as No. 5, except that the ore is paid for with variations of 70 cents per unit zinc up or down from a base of 30%, instead of 60 cents.

Schedules Nos. 1, 2, and 3 are prices paid for western ores of a smelting grade and are all made f. o. b. the smelting point (Kansas common points). It is understood that these prices may be cut should an ore be objectionable, due to either the presence of lime, fluorspar, a high percentage of iron, silica, or lead, or should its physical condition be such as to cause an abnormal loss in smelting. On the other hand a smelting company may pay slightly more for a very desirable ore.

Schedules Nos. 4, 5, and 6 are prices paid for low-grade Western ores for milling purposes and are made f. o. b. the milling company's plant. The milling company produces zinc concentrates which usually meet with a ready sale at prices approximately as shown in schedules Nos. 1, 2, and 3; nevertheless the losses in milling are heavy and the silica-iron-tailings product, carrying from 7 to 14% zinc, finds little sale and usually goes to the dump as waste material. For these reasons schedules Nos. 4, 5, and 6 are comparatively lower than schedules Nos. 1, 2, and 3.

§ 1543. JOPLIN ZINC ORE PRICES. — Zinc ore prices in the Joplin, Missouri district,[11] are controlled, to a certain extent, by the spelter prices, but are further affected by competition between the ore buyers representing the different smelters. The basis price is that offered by the buyers for sphalerite concentrates assaying 60% in zinc, 1% or less in iron, and not exceeding 0.25 to 0.5% in lead.

The value of the ore is then determined by assay. To the basis price $1 per ton is added for each unit in excess of 60% and $1 per ton is deducted for each unit below 60%. There is also deducted $1 per unit of iron in excess of 1%. Special penalties are imposed on ores carrying an excess of lead and these are usually applied by offering a lower basis price.

Special premiums, usually from $1 to $2 per ton, are paid for ores assaying from 62 to 63% zinc when wholly free from lead. Such ores are, however, usually bought on a flat price.

§ 1544. PRECIOUS METAL VALUES. — The addition which is given to the value of a zinc ore, by a silver content, is often of interest.[11] In treating a zinc ore by the ordinary smelting process a lead and silver or gold content can be recovered, but whether this will be done or not is largely a matter of costs. In roasting a zinc ore previous to smelting there is only a small loss in zinc, 1 or 2% at the most, but the lead and silver losses are high, 10% or over. In retorting there is a further loss in lead but no great loss of silver or gold. The retort residue may be treated to recover lead, silver, and gold provided these are present in sufficient quantity to make their recovery worth while. There are three alternatives.

(1). The entire product can go to the lead smelter.

(2). Residue may be treated as crude ore; crushed, and concentrated by jigs, etc., and the concentrates go to the smelter.

(3). Residue may be crushed and jigged for the removal of the unburned coal, the remainder being passed on to the lead smelter, while the coal is utilized in various ways.

At any event it is clear that in the treatment of a zinc ore for the recovery of silver either the losses will be high or the cost high, and the smelter cannot afford to pay for silver and lead more than a small portion of their assay value. European smelters will only pay for 60% of the silver and then only when the silver is in excess of 5 ounces per ton, and nothing for lead except in excess of 8%.

COSTS AND EXTRACTIONS.

§ 1545. COST OF ERECTING MILLS. — For a general discussion of the factors governing construction costs the reader is referred to Vol. II., page 1124. Following are a few figures which the author has been able to collect on the subject:

Table 560 gives the cost of erecting a complete 1500-ton sulphide-copper concentrator in Montana.[9] The figures do not include the cost of erecting and equipping the power plant. The mill is in three sections, each treating 500 tons per day. The indicated horse-power required is given as 612.3.

TABLE 560. — COST OF ERECTING A COMPLETE 1500-TON SULPHIDE-COPPER CONCENTRATOR.

Excavation	$ 25,859.91
Stone masonry	16,720.54
Building	115,045.80
153 Evans jigs	19,358.33
18 Double-deck Evans round tables	8,444.75
Excavation for storage bins	22.68
Masonry " " "	7,334.21
Timber work for storage bins	37,050.16
Trestles and approaches for storage bins	10,811.14
Machinery, except jigs and tables	118,597.88
Piping	16,110.65
Shafting, pulley, bearings, etc.	35,063.39
Wiring and electric lights	2,104.46
Six 2-compartment Harz jigs	644.91
Six 1-compartment " "	550.75
Total	$413,719.56

Mill 96 cost, including an excavation charge of $18,000, $74,600. The mill treats 135 tons per 24 hours, crushing by stamps, amalgamating, concentrating, and cyaniding both concentrates and tailings.

Mill 133 cost $50,000 in 1900. This mill has a capacity of 150 tons in 24 hours.

Mill 173 cost about $250,000. This mill treats sulphide-copper ores and has a capacity of 2,000 tons in 24 hours. The mill is of the hill-side type, terraced throughout. The concrete foundations rest on a rock base. The frame is of steel, and sides of iron. The floors are of wood and the machines rest upon separate foundations from those supporting the mill itself.

The cost of a 50-ton zinc-lead concentrator in Colorado may be given as about $16,000. A 125-ton sphalerite-pyrite roasting and magnetic separation plant in Colorado cost, exclusive of the crushing and screening plant, approximately $35,000.

The average cost of a complete decantation slime plant for a 100-stamp mill in South Africa was $125,000. The average cost of a plant of the same capacity but using conical tanks and filter presses is only $75,000.

§ 1546. WORKING COSTS. — Reliable figures with regard to costs and extractions in the various mining districts of the world are hard to obtain. Where such figures are available they are of the utmost value to the mill man. It is not enough for the mill man to know what his costs are or the average costs of his particular district. He must have a general idea of the factors governing costs and be able to compare his costs or the costs of his district with costs in other districts. Such a comparison may, moreover, be of the greatest value as it may lead to improvement in existing methods. It is impossible to discuss milling costs without at the same time considering mining and smelting costs and extractions, so intimately are the three linked together. The following pages take up, therefore, the general principles governing costs, and then the costs involved in the production of a number of the leading metals in the most important mining centers of the world.

GENERAL PRINCIPLES GOVERNING COSTS.

§ 1547. THE COST OF MINING. — By "the cost of mining" is meant "the complete cost of developing, equipping, and working out a mine, allowing interest on the capital required for these purposes until it is returned in dividends." The cost of mining at different places is subject to great variations both external and internal, by the former more and by the latter less. The external factors governing these variations follow, no quality in the deposit itself influ-

encing any of these conditions: (1) The cost and quality of labor and supplies. (2) The climate, altitude, or distance from populous centers. (3) The hardness of surrounding rocks, the amount of water, and the depth from the surface. (4) The facilities and cost of transportation to milling or smelting centers or markets.

External Factors.

§ 1548. COST OF LABOR AND SUPPLIES. — The wages in the mines of the United States vary between 20 and 50 cents an hour. Usually the difference is partly made up by the varying efficiency of the men. It is hard to fix any figure for the compensation thus effected. If we assume that the difference in wages is represented by 20 and 50, and the difference in cost efficiency by 70 and 100, we find that the variation in labor cost is only about 30% from the maximum. Since labor accounts generally are about 60% of the total current cost of mining, differences in wages are not likely to account for a variation of more than 18%.

In the important English-speaking countries, in the Transvaal, India, and Mexico, it may be said that conditions as regards labor are almost identical with those of the United States. This is also, in all probability, approximately true in all important producing centers of the world at large. Extreme variations must be confined largely to isolated and abnormal localities.

The cost of supplies directly affects the cost of running. The important supplies are fuel, timber, explosives, steel, and tools. The price of these commodities in the United States certainly does not vary much more than 50% from the maximum among the important mining centers. Since the collective cost of the various supplies is rarely more than 20% of the total mining cost, a variation of 50% in the price will produce a difference of only 10% in that cost.

The cost of supplies in the world at large is apparently subject to about the same degree of difference as the cost of labor, but in any country, such as India and South Africa, where the cost of labor is nominally low, the cost of supplies is usually distinctly higher than in the United States.

§ 1549. CLIMATE, ALTITUDE, AND POPULATION. — The influence of climate, though indirect, is powerful through its effect on human life and effort. Sometimes in places where there is an excessive rainfall or excessive heat or unhealthful conditions, the effect may be to limit the scope of operations.

Excessive altitude, and great distance from lines of transportation, place similar limitations upon enterprise. Where several factors of this kind are present at the same locality, the aggregate effect is to place almost insurmountable difficulties in the way of successful operations, but as a general rule, in places where important mines have been discovered, most of these difficulties have been overcome.

§ 1550. UNDERGROUND CONDITIONS. — The hardness of the rock is likewise a comparatively unimportant factor. In any case the hardness affects only one division of the underground work, namely, breaking the ground. The stability of the ground is much more important than the hardness. Timbering is often an important item.

Increase in depth adds a certain increment to the cost of hoisting and pumping, but this increase of cost is far from being proportional to the depth. One consequence of extreme depth that might easily be overlooked is the daily cost of transporting the men to and from their working places. Not only may this represent a considerable expense in itself for mere hoisting, but far the greater part of the time of the workmen for this period is lost to the company.

The temperature of underground workings often becomes a matter of considerable importance. A high temperature may be caused by the climate, or by

great depth, or by the presence of hot waters or heat-producing chemicals. It is only in the last case that the heat can be called an inherent quality of the ore body itself. Temperatures of 80 or 90° Fahrenheit, which are about the limit reached in important mines, affect the energies of the men adversely, although men grow accustomed to them and suffer no ill consequences in the way of health.

§ 1551. TRANSPORTATION AND MARKETING THE PRODUCTS. — Transportation facilities may be described as adequate when they are sufficient to handle the output of a mine and to deliver with promptness the necessary supplies, but this does not necessarily mean cheapness. Transportation is in very many cases one of the most vital elements in the cost of mining. This is particularly the case when the products have to be shipped considerable distances. In the case of coal and iron it is a matter of common knowledge that transportation is often the all-important factor, and even in the case of precious metals, sometimes the cost of transportation to mills and smelters equals, if it does not exceed, the cost of actual mining.

Another factor that is often of considerable importance is the commercial matter of marketing the products. This is sometimes done by contract with selling agents; and sometimes by the company itself. In either case there is to be taken into consideration, in addition to the cost of marketing, the success achieved in disposing of satisfactory quantities of the product. It is in this respect particularly that the cost of mining may be greatly influenced through the effect produced by this factor in determining the volume of operations.

One would scarcely expect that all these various factors would move in unison, *i.e.*, that they should all be equally bad in one place and equally good in another. So far as the natural conditions such as rock hardness, depth, and amount of water to be pumped are concerned, it is extremely unusual that such factors are at a given place at either extreme; but the remaining external factors have their effect through the efforts of man himself. If the mine is situated far from populous centers the reason is apt to be that the climate or altitude is unfavorable. This generally means that labor is dear and inefficient, supplies costly, transportation difficult and expensive. These factors are likely, therefore, to be affected together, and if one is favorable they are all likely to be favorable and *vice versa*.

The sum total of cost variations that may be due to the coincidence of these external factors is therefore considerable and is sufficient to prevent the working of abundant yet valuable products such as coal, iron ore, or salt at places where these conditions are all bad. It may be said that the above factors are those which, as a rule, govern the variations in the cost of low-priced and bulky mineral products.

Internal Factors.

§ 1552. The internal factors are: (1) The size and attitude of the ore bodies; (2) the relation the valuable material bears to the enclosing gangue or material; (3) the problems involved in metallurgical treatment.

§ 1553. SIZE AND ATTITUDE OF ORE BODIES. — These factors introduce immense differences of cost. For instance, in gold mining we find that the Alaska-Treadwell has mined, treated, and marketed its ore for $1.58 per ton, while a certain mine in Colorado producing gold ore subjected to the same process costs $12.25 per ton. The wages are the same, the rock is of the same hardness, the water is no problem in either case, the method of mining even is practically the same. The difference comes, not in the fact that the general management of the Treadwell is probably more economical than that of the Colorado mine, but in the factors mentioned above, and those factors are so important that they are worth a more extended discussion.

If we have a body of homogeneous material more than 4 feet thick and continuous, the mine openings can be made very largely, if not wholly, in the stuff to be extracted. Practically every blow struck produces ore. But reduce the thickness to be mined to 1 foot and we are at once confronted with the necessity of taking out 3 feet of worthless material for 1 foot that is valuable, besides having to keep them separate. Here we introduce at once an enormous proportion of wasted expense that must be borne by the valuable ore. Now break the continuity of the deposit and it is evident that openings have to be made entirely through waste material merely to find and open up the scattered bodies. This evidently increases the cost still more. Now, since it costs about as much to handle one kind of rock as another, it is very evident that the cost of handling narrow and non-continuous ore bodies may be many times greater than the cost of mining ore bodies large enough to afford room to work in. A sort of dead line is established by a thickness of approximately 4 feet. Ore bodies thicker than 4 feet are only moderately cheaper to handle than those of about that thickness.

The attitude of an ore body has a great deal to do with the cost of extracting it. In many coal fields the beds are thrown into a succession of folds with constantly varying slopes. The effect of this is double. First it renders more difficult the taking of the material from the working places to the haulage roads, and second it renders necessary a large amount of dead work in order to reach the various parts of the beds and also prevents regular systematic working. These two factors are sufficient to introduce a great increase of cost over that of mining a flat and unbroken seam.

Faulting of the beds or veins and the occurrence of barren patches introduce complications similar to those caused by folding, but very much more variable in their nature.

§ 1554. HOMOGENEITY OF ORE. — The homogeneity of the ore is a factor of great importance. This quality determines whether it is necessary to subject to metallurgical treatment the whole or only a part of an ore body. If only a part need be so treated we have a concentrating ore. The manner in which the valuable mineral lies in the enclosing rock determines how the concentrating must be done. In any case the process of concentration involves loss and expense, and the question of how far this loss and expense is justified depends on the cost and character of the subsequent metallurgical treatment.

§ 1555. PROBLEMS INVOLVED IN METALLURGICAL TREATMENT. — The cost of the metallurgical treatment depends primarily on the proportion of ore that must be treated.

§ 1556. *Low Costs in Mining may Mean Greater Expense Elsewhere.* — The above seems a sufficient explanation of the fact that it is necessary to a discussion of mining to include a consideration of the processes by which the ore is to be treated. It is not possible to run a mine intelligently without achieving whatever economy there may be in dressing the ore so that the further handling will be facilitated. Efforts to make "records" of low costs per ton have in many cases actually resulted in good mines being run at a loss.

Let us take as a practical example a body of 10,000 tons of ore, running one ounce in gold per ton. This ore can be shipped from Cripple Creek, Colorado, without sorting, at a handsome profit as follows:

Gross value of ore ,10,000 tons at $20.00 per ton	$200,000.00
Cost of mining, 10,000 tons at $3.00 per ton	30,000.00
Freight and treatment, 10,000 tons at $8.25 per ton	82,500.00
Total cost	$112,500.00
Profit	$87,500.00

But suppose we reject half of this ore by sorting. By doing so we throw away 5,000 tons that will average $2.50 per ton, or $12,500. The cost of sorting, at 50 cents per ton, will be $2,500 more. Then our shipment will be as follows:

5,000 tons, at $37.50 per ton	$187,500.00
Cost of mining and sorting, 5,000 tons at $6.50 per ton	32,500.00
Freight and treatment, 5,000 tons at $11.25 per ton	56,250.00
Total cost	$88,750.00
Profit	$98,750.00

In other words, the gross receipts in this case have fallen $12,500. The cost of mining per ton is more than twice as great; the cost of freight and treatment per ton is $3 greater. The apparent showing by the superintendent is very bad, nevertheless he has made for the company $11,250 clear profit on the transaction.

In the first case our total cost for mining, freight, and treatment is only $11.25 per ton; in the second case it is $17.75 per ton, but there is more money in the higher costs. This is an example that has been worked out in practice.

A false economy often results from mining too much in a mere attempt to produce a greater output than the development of the mine really warrants. This invariably results in mining waste at a dead loss, but as this loss is on the same basis as the above there seems to be no need to follow the discussion further.

§ 1557. *Effect of Losses in Determining Costs.* — Mining, milling, and smelting losses often foot up to a total that is simply alarming. It seems desirable, therefore, to draw attention to some of the salient facts in regard to losses.

There never was a mine from which all the available ore was extracted. The ore is exposed to wastage from a variety of causes. If the ore body is large, soft, and homogeneous, as in the Lake Superior iron mines, ore is lost through absolute failure to mine it. Some is forgotten until the openings to it are caved and lost. Some ore is constantly being mixed with sand or rock and left because its grade has been lowered. Some is surrounded by the caving of the overburden into the mine openings in such a manner as to be irrecoverable. System, care, and expense will do much to diminish these losses. It may happen that beyond a certain point the cost of perfecting the extraction may increase very rapidly, may indeed necessitate a different and more costly method of mining.

Since mines are worked for the profit and not for the gross value of their output it may be more economical to choose a cheap method in which the waste of ore may be great. For instance, suppose an ore worth $2 a ton can be mined with a 90% extraction for $1.25 a ton, but that by another method, at a 75% extraction, it can be mined for 90 cents a ton. One hundred tons of ore in the ground would in the two cases yield the following results:

Ore worth $2.00 per ton.	Tons.	Cost.	Value.	Profit.
First case	90	$112.50	$180.00	$ 67.50
Second case	75	67.50	150.00	82.50 — $15.00 gain.
Ore worth $5.00 per ton.				
First case	90	$112.50	$450.00	$337.50
Second case	75	67.50	375.00	307.50 — $30.00 loss.

It is evident, therefore, that even in the most homogeneous materials the cost of mining is directly affected by the value of the product.

§ 1558. *Smyth's Formula.* — Smyth works out the mathematical expression

for the proportion of the deposits that may be abandoned in order to secure a lower mining cost per ton as follows:

Let Q equal the total number of tons of ore in a deposit recoverable by a most favorable method; X, the number of tons abandoned by any other method; p, the profit per ton by method Q; and p^1 the profit by the other method, $Q - X$. When $(Q - X)\ p^1 = Qp$, the two methods are equally desirable. Therefore,

$$\frac{p}{p^1} = \frac{Q - X}{Q}, \text{ and } \frac{X}{Q} = \frac{p^1}{p^1} - \frac{p}{p^1} = \frac{p^1 - p}{p^1}$$

Then $p^1 - p$ equals the saving per ton effected by the second method. The proportion of the deposit that may be sacrificed therefore depends upon the ratio of the saving to the profit per ton. This ratio increases as the profit diminishes; therefore for a given saving a larger proportion of ore of low value may be sacrificed than of high value.

§ 1559. *Other Causes of Losses.* — In every case where pillars have to be left as supports there is a likelihood of portions being ultimately lost. Where ores are sorted, some good material is always rejected through ignorance or carelessness. Where filling is introduced into a stope there is invariably a certain amount of good ore that falls in with it and is lost. In a general way we may place mining losses at from 5 to 30% of the developed ore.

§ 1560. *Losses in Milling.* — Milling losses are in some localities accurately studied; in other places they are casually guessed at or ignored. Sometimes losses in concentration amount to 40% and even more.

The importance and economic bearing of the losses sustained in some representative districts are shown in Table 561.

TABLE 561. — PROPORTIONATE RECOVERY AND LOSSES IN 100 TONS OF ORE IN SOME IMPORTANT MINING DISTRICTS.

	Pittsburg Coal.	Lake Superior Iron.	South-eastern Missouri Lead.	South-western Missouri Zinc.	Lake Superior Copper.	Cripple Creek Gold.
Gross value in the ground	$110	$800	$460	$500	$280	$1,000
Gross value recovered by mining	88	600 to 760	400	375 to 475	246	850 to 950
Gross value recovered by milling	.....	.....	300 to 340	187 to 300	186	782 to 912
Gross value recovered by smelting	.....	550 to 744	270 to 332	163 to 260	180	840 to 940
Gross aggregate losses	22	56 to 250	128 to 190	240 to 337	100	60 to 160
Percent recovered	80.0	70.0 to 93.0	58.0 to 72.0	33.0 to 52.0	64.0	78.0 to 94.0

The aggregate losses represent the maximum of additional operating expenses theoretically justifiable by the extinguishment of losses. Much care must be exercised in the interpretation of these figures for economic purposes. The values thrown away are theoretical values. The practical limit of extraction invariably falls short of 100%. The real purpose of the table is to show in current practice the debatable ground in which the curtailment of losses is confronted by a rising scale of costs.

§ 1561. *The Price at which Profit Vanishes.* — The Federal Mining and Smelting Company's report for 1907 shows a net profit of $2,232,249 after taking out a "development account" of $300,000. This came from 130,373 tons of concentrates containing 3,689,298 ounces of silver (worth 68 cents per ounce or $2,508,722.64) and 59,746 tons of lead (worth $116 per ton or $6,930,536), the total gross value being $9,439,258.64. On this output the profits amount to 23.6% and the costs must therefore be 76.4%, giving an apparent cost for lead of 4.43 cents per pound and for silver of 51.95 cents per ounce.

At first thought one is apt to assume that with costs the same the company

would receive no profit unless the prices were above 4.43 cents for lead and 51.95 cents for silver. How false such an assumption would be appears from the following.

The Coeur d'Alene Mining Companies, of which this is one, do not smelt their own concentrates, but sell them to smelting companies, under contracts somewhat as follows: The smelter pays for 90% of the lead at 90% of the New York price or 81% of the full quantity and price when lead sells at 4.10 cents per pound or under. When the price rises above 4.10 cents per pound the smelter pays 81% and one half the additional price. Thus if lead sells at 4.50 per pound the smelter pays 81% of 4.10 plus one-half of 0.40 = 3.521. The smelter pays for 95% of the full value of the silver. A freight and treatment charge of $16 a ton is deducted from the value of average concentrates. Applying this rule to the output for 1907 we find that the cost of producing concentrates was $23.39 a ton, thus:

	Selling Price.	Contract Price.
Lead	5.80	4.171
Silver	68.00	64.80

916.54 pounds of lead	at 4.171 cents	=	$38.23
28.298 ounces of silver	at 64.60 cents	=	18.28
Total value per ton			$56.51
Freight and treatment charge			16.00
			$40.51

130,373 tons at $40.51	=	$5,281,410.23
Profits	=	2,232,249.00
Total cost of production		$3,049,161.23

$\frac{\$3,049,161.23}{130,373}$ = $23.39 cost per ton produced.

Now let us see what would happen to the Federal Mining and Smelting Company were the prices reduced to the point where profits apparently vanish according to 1907 experience. The concentrates contained: lead, 45.827%, 916.54 pounds, and silver, 28.298 ounces per ton. The value is figured as follows:

	Selling Price.	Contract Price.
Lead	4.41	3.426
Silver	51.95	49.353

916.54 pounds of lead	at 3.426 cents	=	$31.40
28.298 ounces of silver	at 49.353 cents	=	13.97
Total value			$45.37

On this our costs are:

Freight and treatment charge	$16.00
Mining and milling	23.39
Total	$39.39

We have a profit remaining of $5.98 per ton. This on 130,373 tons would be $779,630.54 or 34.9% of the profit at 1907 prices. On this basis we may figure the real vanishing point for lead as follows:

Let the silver price remain stationary and we shall have in our concentrates silver worth $13.97. Our cost is $39.39; therefore 916.54 pounds of lead must be worth $25.42 or 2.773 cents per pound. But as this is only 81% of the selling price the latter will figure 3.421 cents. It would seem, therefore, that we have reached the vanishing point of profits as far as the Federal Mining and Smelting Company is concerned with lead at 3.421 cents and silver at 51.95 cents at New York.

But this deduction may also be wrong as the company has a chance to select its ores and produce a higher grade product. Suppose it produces from

ts more favorable mines only 65,000 tons of concentrates instead of 130,373 ons and that the selected concentrates carry 56% lead and 38 ounces silver. Suppose this ore costs 10% more for mining and milling and 12.5% more for freight and treatment and we have a cost of

Mining and milling	$25.73
Freight and treatment	18.00
	$43.73

But the ore will be worth as follows:

Lead, 1120 pounds at 2.773 cents	$31.06
Silver, 38 ounces at 49.353 cents	18.75
	$49.81

Thus we have a profit per ton of $6.08 still or $395,200, and in addition the company is keeping in its mines a very large amount of ore that may be available at better prices. With the above grade of concentrates, supposing that silver remains the same, the vanishing point of profit on lead will be reached at 2.230 cents by contract or 2.753 cents at New York.

Even yet we have not reached the limit of the company's resources. It is safe to say that if lead had to be sold at 3 cents per pound, supplies to the mines would be cheaper and wages could be reduced.

STATEMENT OF MINING COSTS.

§ 1562. A true statement of mining costs should fall under the following headings:

(1) General expense of the company.

(2) Mining
- Exploration and development.
- Stoping cost.
- Stoping and sorting losses.
- Amortization of mining plant.

(3) Milling
- Transportation to mill.
- Operating costs.
- Losses.
- Amortization of milling plant.

(4) Smelting, refining, and marketing
- Transportation to smelter.
- Operating costs.
- Losses.
- Amortization of smelting plant.

Unfortunately it is impossible to treat the subject so comprehensively owing to the absence of adequate reports. In the absence of such reports as will give the essentials, the most feasible plan of treating the subject seems to be to divide the costs into three main headings: (1) Mining, including development; (2) milling, including transportation from mine; (3) smelting, refining, and marketing, including transportation from mill and to markets. Generally the reports, or reliable information, are sufficient to give a fairly close approximation to the costs.

§ 1563. MANAGEMENT. — This item is here used in its broadest sense and includes the financing of an enterprise, the determination of its scope and its administration.

To begin with, it is noticeable that enterprises in a given district have much in common and are apt to differ in methods from the enterprises of other districts. Each district has its own peculiar methods.

There is a probability that the methods of a given district are pretty nearly correct because they are inevitably the result of experiment, or evolution, and

the fittest has survived. It is logical to expect this. It is probably unfair, therefore, to measure the methods of one district by the standards of another, but this does not mean that the methods in use are always the best. There are always some operators in the same district who get better results than their nearest neighbors. There are mines, long considered as well managed in prosperous times, which have cut their cost of production in halves under the necessity of "hard times," and we often find, in any district, examples of mines which have failed under one management and succeeded under another. Although the effect of management is well understood by many, and cannot be expressed in figures, there are some things which may be said at this point about it.

One thing has been noted as a rule, viz: rich mines cost more to run than low-grade mines. It is generally conceded that this is to be explained by the liberality of the care-free. There is something more than this.

§ 1564. Logical Reason for Rich Mines Costing More. — There may be no physical reason for such a difference in the cost of operating high and low-grade mines and there may be no intentional liberality on the part of the owners of the richer property. There is, however, a logical ground for a difference in the selection of methods imposed by necessity. In rich mines there is no necessary selection and hence there is often no selection. We may, therefore, count on a certain increment, either large or small, of additional expense in mining rich ores as compared with poorer ores.

§ 1565. Economy and Speed. — C. H. Hoover, after considerable study, has come to the conclusion that economical mines should be worked out with great rapidity and that additional plant should be provided for the extraction of discovered ores within periods of from 3 to 6 years. This seems undoubtedly true as applied to gold mines since no limitation is put upon the output by the market. It may be stated in this connection that a wide-awake manager may see his way clear to overlook questions both of high extraction and of cheap work to reap the benefits incident to speed.

Copper.

§ 1566. Lake Superior District. — Practice in the Lake Superior copper district during the last ten years has fixed a cost of about $1,500,000 as necessary for the preliminary development and equipment of a property on a scale commensurate with economy. The mines are dry and safe; the ores of each deposit are uniform in character and can be concentrated easily and cheaply; the smelting operations are reduced to a minimum, the concentrates to be smelted ranging from 1 to 4.5% of the rock milled. Wages are very moderate, being about 25 cents an hour; supplies of all kinds are cheap; the country in the neighborhood of the mines is well watered and well timbered; transportation to and from markets is done mainly by water, and is very cheap. The population is vigorous and intelligent, although at least 95% of the men employed in the mines are of foreign birth, the greatest number being Finns, Englishmen, Austrians, and Italians. It may be said, therefore, that not a single factor in the working of the mines is unfavorable.

Under present conditions the total cost of mining these ores and marketing the copper is from $2 to $3 per ton. The rock hoisted at the various mines is sorted at the rock houses and shipped to the mills on the shore of Lake Superior or its bays. The distance is usually from 10 to 20 miles. The mills concentrate the rock into "mineral" containing about 70% metallic copper. This mineral is then smelted at plants situated along the shores of Portage Lake, an inlet of Lake Superior. The smelting and refining are done by a single process; and ingot copper is produced that needs no further refining, the copper being exceptionally pure and commanding a higher price than any other in the market.

§ 1567. *Nature of the Deposits.* — While in a broad sense the conditions are rather uniform throughout the district, there are three fairly well marked types of deposits whose characteristics impose certain differences of method and cost. One is the conglomerate, of which the only commercially valuable deposit is the great ore shoot worked by the Calumet and Hecla and the Tamarack mines.

The amygdaloid deposits are rather numerous and have much in common. There is, however, an important distinction between the Baltic amygdaloid and others such as the Kearsarge, Pewabic, and Osceola amygdaloids. The latter either are, or are assumed to be, homogeneous, in that all of the vein stuff is sent to the mill with little sorting at the surface. The rock is softer than the conglomerate and more easily milled. The hanging wall is generally firm, so that in some cases mining can be done without timbering.

The Baltic amygdaloid is harder than the ordinary amygdaloid and the copper is very apt to be attached to numerous small fissures that traverse the bed. The result of this distribution of value has been the development of an entirely distinct type of underground mining based on a system of sorting waste out of the vein itself and leaving this waste in the stopes for filling, the larger pieces being piled into a wall and used to support the roof.

Table 562 gives an idea of the characteristics of several of the Lake Superior copper properties, and Table 563 gives a summary of the costs at these various mines.

TABLE 562. — APPROXIMATE FACTS CONCERNING MINES OF THE LAKE SUPERIOR COPPER DISTRICT.

Name of Company.	Kind of Rock.	Relative Hardness.	Average Feet. Thickness.	Vein. Degrees. Slope.	Method of Mining.	Level Interval.	Depth in Feet.	Temperature. Fahrenheit.	Advantages and Disadvantages.
Wolverine	Kearsage amygdaloid	2	15	37	"Stope drifts"	100 ft.	2,500	....	Ideal conditions. Little exploration work or water. No timbering, complex vein systems, or faults. Good working room, ventilation, and soft ground. Few pillars left and it is the richest amygdaloid in the district.
Mohawk	" "	2	15	38	.....	.....	1,200	....	.....
Baltic	Baltic "	3	25	70	Sorting and filling	.....	1,300	....	Whole of wide vein mined. 40 percent picked out in the mine as waste and used to support insecure hanging wall. This results in mine security, no exploration work, and no pillars left. Rock loaded into cars from stone chutes.
Champion	" " ...	3	24	70	.....	.....	1,000	....	Ditto.
Trimountain	" " ...	3	25	68	.....	.....	1,000	....	Ditto.
Tamarack	Osceola " ...	1	23	40	.....	.....	2,500	....	Softest.
Calumet and Hecla	" " ...	1	.....	40	.....	.....	1,400	....	Mills handle 40 percent more amygdaloid than conglomerate.
" " "	Kearsarge " ...	2	.....	40	.....	110 ft.	1,000	....	Ditto.
" " "	Calumet conglomerate	4	14	37	.....	93 ft.	4,000	80	Deposits uniform, continuous, and 2½ times richer than amygdaloid. Hard, tough, and jagged rock and loose hanging wall demand experienced timbering. Great depth and heat. Expensive maintenance of deep shafts.
Tamarack	" "	4	23	37	.....	.....	4,500	....	

TABLE 563. — WORKING EXPENSES OF MINES IN THE LAKE SUPERIOR COPPER DISTRICT.

Name of Company	Wolverine.	Mohawk.	Baltic.	Champion.	Trimountain.	Calumet & Hecla.	Calumet & Hecla.
Kind of Rock	Amygdaloid.	Amygdaloid.	Amygdaloid.	Amygdaloid.	Amygdaloid.	Amygdaloid.	Conglomerate.
Year	1906–1907.	1906.	1906.	1906.	1906.		
Tons of rock hoisted		703,771					
" " " stamped	344,062	618,543	649,932	671,785	506,942		
Yield per ton of rock in pounds	28	15.12	22	25	19		42
Costs per ton of rock stamped.							
General expense			$0.07	$0.09	$0.08	$0.22	$0.22
Surface expense	$0.223	$0.09	0.12	0.13	0.16		
Superintendence and labor			0.79	0.86	1.05		
Underground expense	0.98	0.93	0.21	0.23	0.21	1.10	1.60
Rock house expense	0.065	0.07	0.07	0.10	0.08		
Transportation to mill	0.16	0.14	0.17	0.14	0.11	0.40	0.55
Stamping	0.22	0.19	0.18	0.22	0.21		
	$1.648	$1.42	$1.61	$1.77	$1.90	$1.72	$2.37
Smelting, refining, and marketing	0.284	0.18*	0.25	0.32	0.23	0.25	0.50
Construction	0.08	0.10	0.10	0.10	0.10		
Amortization	0.20	0.25	0.15	0.27	0.22		
Total	$2.212	$1.95	$2.11	$2.46	$2.45	$1.97	$2.87
Average cost per pound of refined copper in New York. Cents	7.93	11.05*	9.50	9.75	12.86		

* On a return of 17.65 pounds per ton which includes the smelting grade of rock taken directly from the mine. The average price of Lake Copper in New York during 1906 was 19.616 cents per pound. The average price of electrolytic copper in New York during 1906 was 19.278 cents per pound.

In addition to the information which will be found in the tables it may be said that at the Wolverine mine, in 1906, sinking cost $17.28 per foot, stoping $7.69 per fathom, and the cost of running drifts was $5.68 per foot in excess of the cost of stoping an equivalent amount of ground.

In 1904 the costs at the Tamarack mine, working on conglomerate rock, had become:

Mining and stamping	$2.42
Smelting and general	0.61
Total	$3.03

Of late years a good deal of amygdaloid has been mined by this company.

§ 1568. MONTANA DISTRICT. — The external factors of mining cost in the Butte district are unfavorable. The district is situated on a semi-arid plateau at great distances from the important industrial centers of North America, in a region containing, it is true, supplies of fuel, timber, and water for power purposes, but these supplies are in every case situated at considerable distances from the mines and under conditions not favorable for cheap delivery. Most of the mining supplies and all of the copper product must be shipped long distances overland on railroads operating in sparsely populated districts with high gradients and high operating costs. The freight by rail, for instance, on copper from Butte to New York is at least six times as great as the rate by water from Lake Superior to New York.

The labor employed in the Butte mines is rigorous, intelligent, and, under normal conditions, abundant; but on the other hand, the wages are the highest paid in the United States, if not in the world, for any considerable volume of labor. Under present conditions, wages in Butte are nearly 100% higher than in Lake Superior. It seems unreasonable to estimate that more than half of this difference can be made up by superior efficiency in Butte, so that in round numbers we shall have to estimate labor costs in Butte as at least 50% higher than at Lake Superior. One unfavorable factor which may be classed as external is the location of claims under the apex laws resulting in constant litigation.

The internal factors in the Butte mines are not unfavorable for fissure vein deposits, but they present certain characteristics which make for increased costs as compared with Lake Superior. The ores all come from an area of about two square miles, which is a favorable feature.

Another internal factor making for higher costs is a great complexity of vein structure which has proved a serious problem to unravel. The oxidation of large bodies of pyrites and the decomposition of vast quantities of timber in these mines has resulted in the generation of an unpleasant degree of heat. The temperature must be kept down by very thorough ventilation. Here we have a factor that makes for additional costs.

§ 1569. *Method of Mining and Treatment.* — The Butte ore is all opened by vertical shafts which at present have attained depths of from 1,800 to 2,800 feet. Levels are run out at intervals of 100 to 200 feet. A large amount of deadwork is necessary to discover and develop the ores. This item, estimated at 30 cents a ton, is quite absent from the prominent Lake Superior copper mines. Expensive timbering is necessary at all times and as a rule the stopes require, in addition to the timbering, a rock filling for safety. This filling is not sorted from the vein itself, but it is suggested that it might be. Since the cost of transportation, concentrating, smelting, refining, and marketing amounts to at least $4 per ton, it would seem as if the point at which ore already broken would better be left in the mine than treated, is about 1.25 to 1.50% copper.

At the Boston & Montana mine explosives, consisting of powder, fuse, and caps, cost 9 cents per ton of ore broken; candles cost 2 cents; timber, 40 cents; coal, 14 cents; and other supplies, 13 cents. As all the mines of this district are alike, the Anaconda mine is selected as a basis for comparison with the Calumet & Hecla at Lake Superior, merely for the purpose of calling attention to the factors which are believed to establish the estimated costs per ton. Table 564 gives the estimated costs, it being, of course, impossible to give the absolutely accurate figures.

TABLE 564. — APPRAISEMENT OF COST FACTORS AT ANACONDA AND AT CALUMET & HECLA.

	Calumet and Hecla.	Anaconda.	Difference Against Anaconda.
Stoping labor	$1.10	$1.65	$0.55
Exploitation	.....	0.30	0.30
Supplies including timber	0.50	0.90	0.40
General expense	0.22	0.50	0.28
Total costs at the mine	$1.82	$3.35	.....
Construction and amortization	0.25	0.25	.....
Total	$2.07	$3.60	+$1.53
Freight to mill	$0.15	$0.15	.....
Cost of concentrating	0.55	.....	.....
Cost of smelting	.....	2.90	+$2.35
Cost of refining and marketing	0.50	1.21	+ 0.71
Total outside costs	$3.27	$7.86	$4.59

Percentage milled, Calumet & Hecla mine, 100.
Percentage smelted, Calumet & Hecla mine, 3; Anaconda mine, 45.
Pounds copper per ton, Calumet & Hecla mine, 42; Anaconda mine, 63.

The method of treatment in Butte is about as follows: The ore is hoisted from the mine and dumped directly into large bins from which it is drawn into railroad cars and transported to combined concentrating and smelting plants. A small proportion goes to plants in the vicinity of Butte itself and not more than two or three miles from the mines, but by far the greater portion is taken to

Anaconda, 26 miles away, or to Great Falls, 100 miles away. At the smelters all ores containing less than 6% copper are concentrated. The higher grade ores are smelted in blast furnaces and the concentrates in reverberatory furnaces, collecting the metals into a matte which is bessemerized on the ground into blister copper. A portion of this blister copper is refined at the Great Falls plant, but by far the greater portion is shipped to the Atlantic seaboard in the neighborhood of New York and there refined.

The most pronounced factor making for high costs in the Butte ores is the large percentage that must be smelted. This can be estimated roughly at 40% as against 4% for the richest copper ores in the Lake Superior district.

It is believed that the large concentrating and smelting plants at Anaconda and at Great Falls are equipped and operated as well as any in the world, no pains having been spared in capital expenditure to secure the greatest economy. At the Boston and Montana concentrator the total cost of producing concentrates is 50 cents per ton of ore treated, made up as follows: Labor 27 cents, power about 11 cents, and general expense, supplies, etc., about 12 cents. But it is manifestly a physical impossibility to smelt 15 to 30 tons of ore at Butte for anything like the cost required to smelt 1 ton of concentrates at Lake Superior. Furthermore, the Butte copper must stand not only a very heavy transportation expense to the seaboard, but must further undergo the expensive process of electrolytic refining. The logical result of these conditions is that in Butte, $4 a ton for concentrating, smelting, and refining may be considered as an absolute minimum as against a cost of from 60 cents to $1 at Lake Superior.

Table 565 shows the reported costs for the various mines at Butte for 1906 and 1907. It is worth noting that the cost of mining proper has tended to rise during the past five years, probably on account of an increased proportion of development work undertaken in recent years. On the other hand, and at the same time, the cost of reduction, refining, and marketing have been notably reduced, due, probably, to the great metallurgical improvements that have been effected by reason of the liberal policies of the companies. In the case of the Boston and Montana a considerable saving has also been effected in transportation cost.

TABLE 565. — COSTS AT MONTANA COPPER MINES.

Year.	Tons.	Mining per Ton.	Freight to Smelter per Ton.	Reduction per Ton.	Refining Marketing per Ton.	Total Cost per Ton.
Anaconda Copper Company (transportation to Anaconda, 26 miles).						
1906	1,521,310	$3.63	$0.15	$2.27	$1.08	$7.13
1907	1,401,948	4.47	0.16	2.52	0.93	8.08
Boston & Montana (transportation to Great Falls, 100 miles).						
1906	1,209,805	$3.45	$0.93	$2.45	$0.90	$7.73
1907	1,156,785	3.93	0.76	2.67	0.92	8.28
Butte & Boston (transportation to Anaconda).						
1906	246,593	$3.51	$0.20	$2.06	$1.25	$7.02
1907	331,629	3.79	0.21	2.27	0.85	7.22
Butte Coalition.						
1906	149,101	$3.94	$0.60	$3.94	$1.50	$9.98
1907	412,169	5.49	0.29	2.29	.....	.....
North Butte.						
1906	259,650	$4.47	$0.20	$4.84	.....	$9.51
1907	374,632	4.53	0.20	4.04	.....	8.77

It is to be noted that the Butte and Boston ores have cost less than the others. This is undoubtedly due to their lower grade, the proportionate cost for smelting, refining, and marketing being less. On the other hand, the North Butte has cost more on account of its higher grade, and Butte Coalition has cost more than the average on account of the large expenditures for improvements.

§ 1570. ARIZONA DISTRICTS. — The external factors are unfavorable. The mines are situated in an arid plateau poorly supplied with water, fuel, timber, and population, which along with high freight rates makes for high costs. Wages of white miners are $3.50 a shift of 8 hours; Mexicans are paid $2.50 a shift. The summer heats are debilitating and the energy of the men is somewhat less than it would be farther north. This is particularly true in regard to metallurgical work. The internal factors vary with each district, the heavy pumping charge in the Globe district making for high mining costs. High milling costs in the Morenci district are caused by the scarcity of water.

§ 1571. *Clifton-Morenci.* — This district produces a porphyry ore in which chalcocite is disseminated. The ores form large irregular bodies at depths of 100 to 300 feet below the surface. In this respect the ore is easy to mine, but there is a certain irregularity, not only in the ore bodies as a whole, but also in their internal make-up. A certain amount of sorting may be done to advantage in the mines. The ore is fairly hard and firm and is taken out by square setting. About 1 foot of opening work is necessary to find and develop 15 tons of ore. The cost of this work is said to be from 21 to 33 cents a ton. Stoping costs are about $2 to $2.80 per ton.

In 1906 the Shannon Copper Company handled ore averaging 3.36% copper. The ore sent direct to the smelter averaged 4.37% copper, that sent to the mill 2.86% copper, and 44.5% of the total output was smelted. A saving of 69% was made by the combined milling and smelting operation or 47.6 pounds per ton of ore. Stoping cost $1.92 per ton and for the year previous the total mining cost was $2.138 per ton on an output of 188,856 tons. In 1906 the output was 210,026 tons, of which 140,683 tons were milling ore. Table 566 gives a summary of the operations for 1906.

TABLE 566. — COST PER TON AT THE SHANNON COPPER COMPANY IN 1906.

Operating mines, mills, and smelters	$6.20
Exploration and development	0.33
Freight, refining, etc.	0.05
General expense	0.30
	$7.48
Outside development, etc	$0.70
Total costs	$8.18

Cost per pound at New York, 15.7 cents.

The Arizona Copper Company gives its costs of mining, including deadwork, ores purchased, and leaching, as $2.50 in 1906. It seems fair to assume from this that the underground costs are substantially the same as the Shannon.

Assuming that the cost of mining, including development, is $2.25 to $2.50 a ton, and that out of this cost about 50 cents a ton is due to timbering, it seems fair to say that the excess over Lake Superior costs is due to the external factors.

The internal factors that govern the cost of treatment are the losses due to concentrating, the proportion of concentrates to crude ore, and the smelting qualities of the ore.

Table 567 gives a summary of operations of the Arizona Copper Company for 1906.

TABLE 567. — COST PER TON AT THE ARIZONA COPPER COMPANY IN 1906.

Cost working mines (deadwork, ores purchased, leaching, etc.)	$2.50
Smelting, refining, and marketing	2.06
General	0.14
Interest and amortization	0.70
Total costs	$5.40

The cost per pound of copper in New York was 11.07 cents. During 1906 this company handled 610,000 tons of ore, of which 20% was smelted without concentration. The costs for concentrating, smelting, refining, and marketing together were $2.06, the costs being based on the entire tonnage sent from the mine. If the cost of concentration is 75 cents a ton including transportation from the mines, the cost for smelting, refining, and marketing would appear to be about $6 per ton smelted. On this basis the cost to the Shannon Company, on account of the larger proportion smelted, should be $1.80 higher than to the Arizona Company. This seems to be approximately the case.

§ 1572. *Bisbee or Warren.* — The internal conditions in this district are quite different from those in the Clifton-Morenci district, resulting in mining costs of $6 per ton here as against $2.50 or less there. The ores yield about 7% copper after a rough selection in the stopes, where about one-half the total material broken is rejected. From 7 to 10 tons of ore are extracted per foot of opening work. Ground movement is so violent that the cost of timbering is high. About 30 feet board measure of timber from Puget Sound is buried in the mine per ton of ore extracted. At $24 per thousand, this amounts to 75 cents a ton for timber alone. In this district it is necessary in mine development to not only open up shafts and drifts to reach the ore, but a search through 10 cubic feet of difficult mining ground must be made for every cubic foot extracted. No concentrating ore has yet been found in the district. All the ore raised from the mines must be smelted, consequently it must be selected as much as possible.

To sum up — there are in these mines three powerful factors that make for high costs: (1) A very large proportion of development work; (2) soft ground, requiring slow, cautious working, and heavy timbering; (3) careful selection imposed by the necessity of smelting the whole product, thus imposing a high subsequent metallurgical cost. This is the most imperative factor of all, for it can be shown that in this case lower costs at the expense of lower-grade ores might result in frightful losses. To mine 4% ore for $3 a ton against 7% ore at $6 a ton, smelting costs remaining the same, would increase the cost of copper about 0.82 cent a pound, or $16.40 a ton.

In 1906 the Calumet and Arizona Mining Company handled 236,565 tons of ore producing 18,735 tons of copper which cost in New York 7.76 cents per pound. For every dollar's worth of copper 3.5 cents' worth of silver was also produced. Nine and one-half tons of ore were obtained per foot of development work. The costs may be divided almost equally. Mining per ton of ore, $6.06; smelting, refining, and marketing, $6.05; total, $12.11 per ton of wet ore.

The actual division of concentrating expenses as to labor, supplies, etc., at two establishments in Southwestern Arizona for the year 1907 is given in Table 568.

TABLE 568. — CONCENTRATING EXPENSES IN SOUTHWESTERN ARIZONA IN 1907.

Ore Concentrated.	Plant No. 1. 347,019.70 Tons.	Plant No. 2. 152,272.62 Tons.
	Per Ton.	Per Ton.
Labor	$0.2257	$0.2471
Supplies	0.0175	0.1278
Crushing	0.0463	0.0826
Power	0.1734	0.1093
Water supply	0.0705	.....
Circulating water	0.1130	.....
Re-pumping water	0.0707	.....
Repairs	0.1636	.....
Incidentals	0.0578	0.0275
Totals per ton	$0.9385	$0.5943

At plant No. 1, during 1907, 347,019.70 tons of dry ore, running 2.9235% in copper, were milled, and 139.75 tons of dry slimes, running 7.0111% in copper, were remilled. A saving of 79.64% was made, or 51,724.433 tons of dry concentrates, running 15.222% in copper; 1578.403 tons of dry slimes, running 7.73% in copper; and 293,856.614 tons of tailings, running 0.705% in copper, were the resulting products. The mill ran 92.84% of the total time and 1024.06 tons were milled per 24 hours of actual running time. 315.83 gallons of water were used per ton milled, or 220.87 gallons per minute.

§ 1573. UTAH. — The average cost of mining copper-sulphide ore bodies at Bingham, Utah, is given in Table 569; this includes two methods of mining concentrating ores and one method of mining smelting ores.

TABLE 569. — AVERAGE COST OF MINING SULPHIDE ORE BODIES AT BINGHAM, UTAH.

	Smelting Ores. Mining by Square-setting and Filling. Per Ton.	Concentrating Ores,	
		Top Slice Caving System. Per Ton.	With Steam Shovels. Per Ton.
Exploration work and stripping	$0.15	.....	$0.05
Stoping including timbering and filling { Labor	1.01	0.50	0.10
Stoping including timbering and filling { Supplies	.....	0.10	0.05
Tramming to ore bins	0.15	.....	.....
Power and light	.....	0.04	.....
Surface expenditures, improvements, etc.	0.04	.....	.....
Engineering and assaying	0.02	0.01	0.01
Salaries and general expense	0.13	0.04	0.04
Development	0.10	0.03	.....
Total mining	$1.60	$0.72	$0.25

Table 570 gives the average cost of milling concentrating ores in Bingham, Utah.

TABLE 570. — AVERAGE GENERAL MILLING COSTS AT BINGHAM, UTAH.

	Per Ton.
Labor	$0.25
Supplies	0.10
General expense	0.05
Power and light	0.20
Total milling	$0.60

The cost of supplies in this district is about as follows: dynamite, 30%, $11.80, and 40%, $12.80 per 100 pounds; drill steel, 8 cents per pound; timber

and lumber, $25 per thousand feet board measure; round poles from 5 to 8 inches in diameter inclusive, one cent per inch-foot; lump coal, delivered, $4.50, run of mine, $4, and slack $3.25 per ton; candles, $3.41 per case of 40 pounds.

The wages for underground help are about as follows: Muckers, hand trammers, mule trammers' helpers and nippers, $2.50; machine helpers, hand-steel miners and mule trammers, $2.75; machine men, timber men and motormen, $3; tool sharpeners, $3.50 per 10-hour shift; blacksmiths and carpenters, $4 per 10-hour shift; shift-bosses, $4; and foremen, $5, all being on 8-hour shifts unless otherwise mentioned.

All the wages in steam-shovel mining and surface work are on a 10-hour basis and are as follows: Trackmen, dump-men, and laborers, $1.75; pitmen and quarrymen, $2; labor bosses and second helpers for machine men, $2.25; steam-shovel and locomotive firemen and watchmen, $2.50; trainmen, $3; first helpers for machine men, $3.40; locomotive engineers and machine men, $3.75; helpers for Keystone drillers, $4; Keystone drillers, $5; steam-shovel cranemen, $125 per month; steam-shovel engineers, $175 per month; and foremen from $125 to $175 per month.

§ 1574. *Utah Consolidated.* — The ores mined by this company average by actual recovery for five years 60 pounds of copper, 1.33 ounces of silver, and 0.104 ounce of gold per ton. The silver and gold are worth about $2.88 per ton, so that with copper at 14 cents per pound there is a total metallic extraction equivalent to 80 pounds of copper. The ore is cheaply mined and is nearly self-fluxing. It is delivered to the railroad over an aerial tramway about 12,000 feet long and is transported by rail about 25 miles to the smelter.

The external conditions are, for the Rocky Mountain region, good, and the internal factors, with the single exception of the requirement of smelting all the ore, are very favorable for cheap work. The ore is soft, uniform, and occurs in good-sized bodies. The stoping is done in square-set rooms. The item of timbering must be one of the chief mining expenses.

Table 570*a* shows the costs for 5 years ending December 31, 1907.

TABLE 570*a*. — COSTS PER TON FOR FIVE YEARS, UTAH CONSOLIDATED.

	Per Ton.
Mining, 1,260,453 tons	$1.73
Development, 1,400,000 tons	0.30
Transportation, smelting, and refining 1,276,393 tons	2.80
General expense, 1,276,393 tons	0.23
Current construction, 1,276,393 tons	0.34
Amortization, etc	0.48
Total cost	$5.88

Remembering that the ore contains in copper, gold, and silver the equivalent of 80 pounds copper to the ton, we get an average complete cost of producing copper of 7.35 cents per pound. This may be divided as follows: actual operating cost, 6.75 cents; allowance for return of working plant, 0.60 cent. Of course, everything received above 6.75 cents for copper or its equivalent in New York goes to the stockholders as dividends.

§ 1575. TENNESSEE COPPER COMPANY. — This is the only mine of importance in the United States found east of Lake Superior. It mines several large lenses of cupriferous pyrite. All the ore must be smelted in the blast furnace. The plant is said to do the cheapest work in the world.

The external factors are favorable. Fuel is cheap and transportation to markets much less than for Western mines. Wages are about 20 cents an hour and in this case the efficiency is probably high.

The internal factors are favorable, with the exception of the necessity of smelting all the ore. This is a most powerful element of high cost. The ore yields only 32.5 pounds of copper to the ton.

The current operating costs for 1907 were as follows:

	Per Ton.
Mining	$1.22
Smelting	2.14
Administration, etc.	0.49
Total per ton	$3.85

To this should be added 21 cents a ton for the use of the mining plant and 47 cents a ton for the use of the railroad and smelting plant, making a total of $4.53. On this basis anything received above 12 cents a pound for copper in New York is applicable to dividends and anything above 14 cents is net profit after allowing for the return with interest of money invested in the plant. These costs are higher than the average by from 5 to 10%. The costs for 1907 were high on account of unfavorable economic conditions throughout the country. It should be explained further that in addition to the copper the sulphur is being utilized so that in the future the property will not be wholly a copper mine.

§ 1576. GRANBY CONSOLIDATED.—The Granby Consolidated Mining, Smelting, and Power Company, Limited, of British Columbia, handles a chalcopyrite-porphyry ore which yields by actual extraction 24.2 pounds of copper, 0.38 ounce of silver, and 0.06 ounce of gold per ton. The silver and gold are worth $1.42 per ton which is equivalent to about 10 pounds of copper. The total value, therefore, is equivalent to a little more than 34 pounds of copper per ton. A large part of the mining has been done in open pits with steam shovels. The ore will not concentrate, but is smelted in bulk.

It is very hard to obtain data concerning the costs at this property, but Table 571 gives as close an estimate, perhaps, as can be gained from outside sources.

TABLE 571. — ESTIMATED COSTS PER TON AT GRANBY.

Cost of copper for current operation and construction per pound	$0.11
Profit per pound required to return capital in 15 years with 5 per cent interest	0.035
Total cost required at maximum output for 15 years to make the investment justifiable	0.145

§ 1577. MOUNT LYELL, TASMANIA. — Sixty per cent of the Mount Lyell ore comes from open-pit mining and averages to run 0.6% in copper, while the other 40% comes from underground workings and averages to run 6.0% in copper.

The external factors are probably nearly average for English-speaking countries. The climate is rainy, but not more so than at Cornwall or Scotland. The mines are situated near the coast, so that supplies must be reasonable in cost, and transportation of copper, even to England, must cost less than transportation of Western American copper to New York.

The internal factors are, for a smelting enterprise, very favorable. As a large proportion of the ores come from open-pit work, the average cost for mining is less than $2 a ton. The smelting is largely pyritic and the proportion of coke used in the charge is said to be only 1%.

Table 572 gives the costs per ton computed over a period of 4 years.

TABLE 572. — COSTS PER TON AT MOUNT LYELL.

	Per Ton.
Mining and stripping 1,690,531 tons and developing 1,131,258 tons	$1.[illegible]
Smelting and converting 1,698,793 tons, railway expenses, freight, and marketing	3.1[illegible]
General expense 1,698,793 tons	[illegible]
Amortization	[illegible]
Total cost	$5.52

The actual extraction has been 86% copper, 99% of the silver, and 105% of the gold estimated by assay to be contained in the ore. On this basis there has been recovered 45.5 pounds of copper, 1.8 ounces of silver, and 0.054 ounce of gold per ton of ore treated. The gold and silver are worth $2.18 per ton at average prices. This is equivalent to 15.5 pounds of copper and we may figure the metallic contents altogether as equal to 61 pounds of copper. On this basis the cost per pound of copper is 9 cents.

§ 1578. VARIOUS OTHER DISTRICTS. — An example of mine conditions and costs similar to those of Butte is furnished on the other side of the world by the Wallaroo and Moonta mines of South Australia. The mining costs are somewhat higher than those at Butte because exploration is more extensive, but in other respects the parallel with the great Montana camp is close and interesting.

The dressed ore of Wallaroo has averaged about 11%; that of Moonta about 20% in copper, excepting that in later years it has been 2 or 3% lower. For a long time the vein stuff, as raised to surface, at both properties has contained on the average from 3 to 4% copper.

The Moonta mines are situated 12 and the Wallaroo mines 6 miles from the smelting point, Port Wallaroo.

The high cost for mining is easily explained. There are more than 80 miles of development openings, including shafts, drifts, etc. This work would probably cost at least $12 a foot. This accounts for $3 per ton of dressed ore, or approximately 75 cents per ton of vein stuff hoisted. The mines vary in depth from 1,000 to 2,500 feet with an average of about 1,500 feet. The actual stoping, including hoisting, pumping, etc., costs about $3.50 per ton. The ground is soft like that of Butte, probably softer, requiring close timbering as well as close filling. Sorting and milling in 1903 cost 75 cents at the Wallaroo and $1.25 at the Moonta mines.

The average cost of mining, concentrating, and smelting a ton of concentrates is about $35 as shown by Table 573 which gives the cost of the complete operations for 6 of the last 10 years.

TABLE 573. — COSTS OF OPERATION AT WALLAROO AND MOONTA FOR SIX YEARS.

	Crude per Ton.	Concentrates per Ton.
General expense, 1,176,000 tons	$0.58	$2.33
Mining and milling, 1,176,000 tons	5.68	22.81
Smelting, 292,889 tons	2.37	9.52
Total per ton	$8.63	$34.66

GENERAL CONSIDERATIONS.

§ 1579. We may divide copper mines into three classes, each presenting a different economical problem. I. Disseminated ores in which concentration is the all-important thing, smelting being applied only to a fraction of the

material mined. II. Quartz-pyrite ores in fissure veins in which the ratio of concentration is low and the proportion smelted considerable, making the costs usually high. III. Ores that cannot be concentrated must be smelted in bulk.

§ 1580. I. DISSEMINATED ORES. — The first class contains the Lake Superior copper ores in which native copper is disseminated, either in porphyry or in conglomerates derived from porphyries, in the proportion of from 1 to 4%. The ores are concentrated in the mills (with 20% loss in milling) to from 1 to 4.5% of their original volume. This is the proportion smelted.

We have in this group also the disseminated porphyry ore of Bingham, Utah, containing 2% copper in the form of chalcocite. This ore concentrates with 75% recovery into 4.5% of its original volume. The disseminated ore of Ely, Nevada, which concentrates into 12.5%; that of the Clifton-Morenci district in Arizona which concentrates into 15%; that of Nacozari, Mexico, which concentrates into 17%; the ore of the Miami Copper Company at Globe, Arizona, and the Braden copper mines of Chili, may all be included in this class.

The cost of producing copper from these ores will average about 9 cents per pound delivered in New York. These ores now produce a third and will soon yield one-half the copper of North America, and they may be described as the most important, most profitable, and most promising source of copper.

The salient facts regarding the cost of mining disseminated ores may be expressed in Table 574.

TABLE 574. — COST OF MINING DISSEMINATED ORES.

	Low.	High.
Mining { Open pit	$0.50	.....
Mining { Underground	1.25	$2.50
Concentrating	0.40	1.00
Smelting, refining, and marketing	0.15	1.30
Open pit	$1.05	.....
Underground	1.80	$4.80

At the average price of 14 cents for copper, these figures mean that under the most favorable conditions a Lake Superior ore, if it could be mined from an open pit, might meet expenses with a yield of only 7.5 pounds of copper per ton. If mined underground about 13 pounds is the minimum; while under the most unfavorable conditions a yield of 34 pounds may be required.

§ 1581. II. QUARTZ-PYRITES WITH LOW CONCENTRATION. — Conspicuous examples of the quartz-pyrite ores are those of Butte, Wallaroo, and Moonta. Table 575 gives an idea of the relative costs for this class of copper producers.

TABLE 575. — COST OF PRODUCING COPPER IN AUSTRALIA AND MONTANA.

	Australia.	Montana.
Mining per ton	$4.68	$3.78
Milling per ton	1.00	
Smelting, refining, and marketing per ton	2.37	4.62
General expenses per ton	0.58	
Total cost per ton	$8.63	$8.40

Applying to these costs the average price of 14 cents per pound for copper, it is evident that such ores must yield about 60 pounds of copper, or its equivalent, in order to pay expenses. The cost of production varies between 10 and 15 cents per pound.

Other mines working on ore belonging to this class are the old Dominion

and others on the great fault fissure of Globe, Arizona, and in part, at least, those of Cananea, Mexico.

§ 1582. III. When all Ore Must be Smelted. — Copper mines having ores belonging to this class are those at Bisbee, Arizona; Tennessee Copper; Utah Consolidated; Granby Consolidated; and Mount Lyell. To this list might be added the Rio Tinto pyrite mines of Spain and Portugal, the mines of Shasta County in California, United Verde in Arizona, Cerro de Pasco in Peru, and others of less importance.

Speaking generally it must be admitted that the mines of Class III produce a large proportion of the world's copper. The list of big producers includes the Rio Tinto, the Copper Queen, Calumet and Arizona, United Verde, and many other mines not so big but very profitable. Rio Tinto seems to produce the cheapest copper in the world, but it is believed to be due to the fact that sulphur is also utilized to an important extent. Leaving out this case, in which copper only costs 5 cents per pound, it does not seem probable that copper from these ores is produced at an average of less than 10 cents per pound.

§ 1583. — Table 576 gives additional and comparative figures on the cost of producing and marketing copper as obtained from various reliable sources. These figures chiefly apply to the costs during the years 1907 and 1908. In most cases they agree very well with those previously given.

TABLE 576. — COST OF COPPER PRODUCTION.

Mine.	Locality.	Class of Mine.	Cost of Copper in Cents per Pound.
Calumet & Hecla	Michigan	Deep	8.25
Mohawk	"	"	11.00
Wolverine	"	"	7 32
Tamarack	"	"	15.82
Baltic	"	"	9.25
Champion	"	"	9.05
Anaconda	Montana	"	10.00
Boston & Montana	"	"	10.50
Butte & Boston	"	"	10.00
Butte Coalition	"	"	10.75
Nevada Consolidated	Nevada	Open cut	7.00
Cumberland-Ely	"	Deep	8.50
Utah Copper Co.	Utah	Open cut	9.00
Boston Consolidated	"	" "	10.00
United Verde	Arizona	Deep	9.00
Tennessee	Tennessee	"	10.50
Rio Tinto	Spain	Open cut	5.50
Mount Lyell	Tasmania	" "	8.00
Dominion	British Columbia	Deep	10.50
Burraga	Australia	"	8.50
Great Cobar	"	"	8.00
Cananea	Mexico	"	10.00

Silver-Lead.

§ 1584. Cœur d'Alene District. — The external factors which affect mining in the Cœur d'Alene are the most favorable of the whole Rocky Mountain region. The altitude is moderate; the climate, mild; timber and water-power are abundant and cheap. Transportation to consuming centers is, however, expensive and wages are high. Labor is efficient and abundant. The mines are generally deep, but are operated through adit tunnels which save hoisting and pumping expenses.

The internal factors are favorable. The veins are typical fissures. The ore shoots are persistent and profound, with a thickness varying from 8 to 100 feet and a length varying from 100 to 1,000 feet. Single bodies have

produced several million tons of ore. The ore, in the main, has to be concentrated. The proportion shipped to the smelters varies from a quarter to a tenth of the amount mined. Of the proportion shipped a considerable amount is picked out by hand either underground or at the mill, the lower grades being concentrated. In addition to the sorting of first-class ore, there is still larger sorting of waste in the stopes.

§ 1585. *Producing Mines.* — The mines may be conveniently divided into two groups; the Wardner and the Cañon Creek. In Wardner there is only one vein and two important mines; the Bunker Hill and Sullivan, an independent concern, and the Last Chance, owned by the Federal Mining and Smelting Company. The mining is done almost wholly by the filling method.

The Bunker Hill mine in 20 years up to June 1, 1907, had produced as shown in Table 577.

TABLE 577. — PRODUCTION AND COSTS OF BUNKER HILL FOR LAST 20 YEARS.

		Per Ton.
Tons mined	3,388,106	.....
Gross value	$34,375,266.00	$10.15
Smelting, refining, and deductions	14,249,036.00	4.21
Net value to mine	20,126,330.00	5.94
Operating costs	8,832,244.00	2.60
Other costs, construction, litigation, exploration, etc.	3,400,000.00	1.00
Total cost approximately	$12,232,244.00	$3.60

It will be seen that these are pretty good costs, not essentially different from those of the Lake Superior region for the same kind of work as comparison with, for instance, Baltic, Trimountain, and Champion mines, will show.

The ore shipped in 1906–07 was somewhat above the average in grade, but it will serve as an illustration of the general problem of mining on the Wardner vein. Out of 336,630 tons mined, 87,640 tons were shipped to the smelters or 1 ton in 3.84. The shipping product averaged 45.83% lead and 18.78 ounces silver per ton. The ore as mined assayed 13.32% lead and 5.89 ounces silver, the milling loss being estimated at 10.43% lead and 17.06% silver, or 11.96% of the combined product. Without considering the high prices for the year in question, but taking average prices of $92 a ton for lead and 60 cents an ounce for silver, we find that this ore is giving the results shown in Table 579, while the costs per ton mined for the same period of time are given in detail in Table 578 for the year ending May 31, 1907, and the maximum and minimum costs for the last 7 years.

TABLE 578. — COSTS PER TON INCLUDING CONSTRUCTION WORK AT THE BUNKER HILL AND SULLIVAN MINE.

	For Year Ending May 31, 1907.			During Last Seven Years.	
	Labor per Ton.	Supplies per Ton.	Total per Ton.	Maximum Total per Ton.	Minimum Total per Ton.
Stoping	$1.105	$0.365	$1.470	$2.33	$1.26
Tramming	0.053	0.017	0.070	0.10	0.05
Concentrating	0.149	0.106	0.255	0.26	0.19
Exploration	0.049	0.036	0.085		
Shipping	0.046	0.005	0.051		
General expenses	.....	.....	0.143		
Construction	.....	.....	0.044	0.60	0.19
Mill construction	.....	.....	0.056		
Taxes, litigation, etc.	.....	.....	0.253	.....	.....
Total costs per ton	.....	.....	$2.427	$3.29	$1.69

TABLE 579. — PROFITS PER TON ON BUNKER HILL OPERATIONS FOR 1906–07 AT AVERAGE PRICES.

	Lead per Ton.	Silver per Ton.	Total per Ton.
Full assay value	$12.25	$5.53	$15.78
Mill losses, say 12 percent			1.89
Value leaving mine			13.88
Mining, milling, and construction			2.43
Freight and treatment			3.71
Smelter deductions (losses to mine)			3.08
Total costs			6.14
Losses and deductions			4.97
Total costs and deductions			11.11
Average profit			4.67

The Cañon Creek mines differ from the Wardner mines only in the shape of the ore bodies. Wages average 46 cents an hour, 4 cents higher than in Wardner. Details of cost are not given. The costs are higher than at the the Bunker Hill and Sullivan Mine, but the difference at the mine is explained by the factors, (1) higher wages, (2) a greater amount of hoisting and pumping, (3) a charge for railroad transportation from mines to mills, (4) a greater number of power and mining plants to maintain, and a higher power cost. In each case these factors are inherent to the problem and cannot be removed.

Table 580 gives some cost figures free from smelter deductions when the prices of lead and silver averaged 4.6 and 59.2 cents respectively.

TABLE 580. — COST AND VALUE OF ORE PER TON AT SIX MINES FOR FIVE YEARS.

Property.	Tons.	Cost of Mining and Milling per Ton.	Construction per Ton.	Total per Ton.	Freight and Treatment per Ton.	Total Cost to Mine per Ton.	Value to Mine per Ton.	Profit per Ton.
Hecla	402,000	$3.43	$0.47	$3.90	$2.56	$6.46	$9.57	$3.11
Standard	1,244,571	2.91	0.15	3.06	2.37	5.43	7.29	1.86
Tiger-Poorman	488,675	2.94	0.10	3.04	1.71	4.75	4.99	0.24
Morning	924,416	1.96	0.15	2.11	2.51	4.62	5.42	0.80
Last Chance	670,164	2.66	0.08	2.74	2.99	5.73	8.19	2.46
Total and averages	3,729,826			$2.97	$2.43	$5.40	$6.93	$1.60

Table 581 gives the estimated values of some of the chief items of expense at these properties.

TABLE 581. — ESTIMATED AVERAGE VALUE OF CHIEF ITEMS.

Smelter deductions, per ton	$ 1.50
Gross value of ore before milling at New York quotations, per ton	10.54
Loss in milling, 20 percent, per ton	2.11
Percent lead, before milling	8.66
Ounces silver per ton, before milling	4.33
Cost to mine per pound of lead at New York	$0.0354
Cost to mine per ounce of silver at New York	0.46
Cost of lead in New York (actual cost)	0.0326
Cost of silver in New York (actual cost)	0.42

If these mines were all owned by the American Smelting and Refining Company, and the cost of the whole process from mine to market were to be given, it would probably be something as shown in Table 582.

TABLE 582. — PROBABLE TOTAL COSTS.

	Per Ton.
Total value of ore per ton	$8.00
Cost of mining, milling, and construction	2.90
Cost of smelting, refining, and marketing	2.80
Profit per ton	2.30

Table 583 shows an interesting record for the Hercules mine, the tonnage being given in selected crude shipping-ore and concentrates.

TABLE 583. — RESULTS AT THE HERCULES MINE.

Tons Shipped, 56,446

	Per Ton.	Per Ton.
Current mining and milling cost	$10.38	$24.02
Construction	13.64	
Freight to smelter	11.15	19.67
Treatment charges	8.52	
Total cost per ton		$43.69
Total value, free of deductions		82.69
Profit per ton		$39.00

If the Hercules mined 1 ton of concentrates to 4 of crude ore its costs for 5 years were as shown in Table 584.

TABLE 584. — POSSIBLE COSTS AT THE HERCULES MINE FOR FIVE YEARS.

	Per Ton.
Current operating, per ton	$2.60
Cost of plant	3.41
Total per ton	$6.01

§ 1586. *Cost of Smelting, Refining, and Marketing.* — The average ore shipped carries about 46% lead and 23 ounces silver per ton. With lead and silver in New York at 4.60 cents per pound and 60 cents per ounce respectively, these average ores are worth as follows:

Lead, 920 pounds, at 4.6 cents	$42.32
Silver, 23 ounces, at 60 cents	13.80
Total	$56.12

On this the smelters pay $45.95, deducting $10.17 for losses; in addition to which they charge about $16 for freight and treatment, making a total of $26.17 per ton.

Table 585 gives the approximate cost of smelting Cœur d'Alene ores of average grade.

TABLE 585. — APPROXIMATE COST OF SMELTING CŒUR D'ALENE ORE.

	Per Ton.
Freight on ore to Denver at $8.00 per ton allowing for 6 percent moisture	$ 8.48
Freight, bullion to New York (46 percent of $6.40)	2.94 *
Refining bullion, lighterage, etc. (46 percent of $8.00)	3.68 *
Loss (silver, 4 percent; lead, 6 percent)	3.09
Average smelting cost, including roasting	3.75
Total smelting cost	$21.94
The profit on this basis is about $4.43 per ton.	

* Together these two items amount to $6.62. It would appear that since these ores are siliceous, the lead in the charge can be reduced to 12.5 percent and used as a carrier and collector, the ores should be charged for refining, etc., only in the proportion in which they appear in the smelting charge. If this were done the $6.62 would become about $1.80 and the profit would be $9.25 instead of $4.43 per ton.

If the Bunker Hill and Sullivan Company belonged to the American Smelting and Refining Company, the costs under these conditions would probably be deduced about as shown in Table 586.

TABLE 586. — POSSIBLE COSTS AT THE BUNKER HILL AND SULLIVAN PROPERTY.

	Per Ton.	Per Ton.
Assay value of crude ore mined per ton		$15.78
Mill and smelter losses		2.66
Net value recoverable		13.12
Mining cost	$2.43	
Smelting, refining, and marketing one ton out of 3.84	4.91	
Total costs per ton	$7.34	
Assumes a charge for general expense and amortization of smelter of	0.50	7.84
Profit per ton		$5.28

§ 1587. BROKEN HILL DISTRICT. — In this district is located the Broken Hill Proprietary mine which is the greatest silver-lead producer in the world. In 8 years this company has produced 4,482,202 short tons of ore averaging 9.95% lead, 7.92 ounces silver, and 0.008 ounce gold per ton. The cost for mining, concentrating, smelting, refining, marketing, general expenses, and depreciation has been about $9 per ton. In 1906 this figure was about $8.68.

The costs at this mine are high, owing to unfavorable external factors. The climate is extremely arid, the country is a desert. Fuel, water, labor, and transportation are all expensive. The fuel, flux, and timber accounts per ton of ore handled are about twice as much as in the Cœur d'Alenes. These figures indicate such a set of external factors as to explain why it costs $4.07 per ton for mining and concentrating at the Broken Hill against $3 or less in the Cœur d'Alenes. The internal factors for mining are good.

On the smelting side we find that the proportion to be smelted is high, being 1 ton in 2.9, against 1 ton in 3.84 at the Bunker Hill. The actual cost for smelting, refining, and marketing Broken Hill concentrates is $11.19 per ton smelted. This includes freight on ores from the mine at Broken Hill, N. S. W., to Port Pirie, which is $2.12 per short ton. It does not include freight on bullion from Port Pirie to market. These facts seem to permit of the comparison, shown in Table 587, with American results on Cœur d'Alene ores.

TABLE 587. — SMELTING COSTS OF BROKEN HILL AND CŒUR D'ALENE ORES.

	Broken Hill per Ton.	Cœur d'Alene per Ton.
Freight from mine to smelter neglecting moisture	$2.12	$8.00
Freight, smelter to refinery		2.94
Smelting	9.07	3.75
Refining		3.68

We find that Broken Hill ores averaging 28.8% lead cost for actual smelting and refining $9.07 per ton against $7.43 per ton in the case of Cœur d'Alene ores averaging 46% lead. The freight in American practice performs the triple function of bringing the ores nearer to bases of fuel supply, of bringing them in contact with other ores that can be profitably smelted in conjunction, and of bringing them nearer the markets where they are to be finally sold. Although the Broken Hill Company does not pay freight on its ore beyond Port Pirie, it does pay freight on its fuel and other smelting supplies to Port Pirie.

Taking the average cost of working the Broken Hill ores at $9 per ton, and

assuming that the products sell in the proportion of 3.15 cents per pound for lead and 60 cents per ounce of silver, we find that Broken Hill ores are worth $11 a ton, and that lead during the period reviewed has cost 2.78 cents per pound, silver 49 cents per ounce, and gold $18 per ounce.

§ 1588. A COLORADO DISTRICT. — At a silver-lead property in Colorado, having ordinary and average Rocky Mountain conditions to contend with, 124,642 tons of ore were mined in the year ending July 31, 1907. The shipping grade amounted to 13,584 tons, while the concentrating grade amounted to 111,058 tons. During the year 6,730 feet of dead work was performed. At this property machine drills are used resulting in a lower cost for labor per ton of ore mined than the average for the district, as there are no other machine drills. Square-set timbering in exceptionally heavy ground gives a higher timbering cost than the district averages. This company handles 2,500 gallons of water per minute, under a head of 775 feet, draining the whole district at a cost of $5,000 to $6,000 per month. Other mines in the district have little or no pumping charges. Aside from these exceptions Table 588 represents the average costs of the district.

TABLE 588. — AVERAGE COSTS OF A COLORADO SILVER-LEAD PROPERTY.

	Labor per Ton.	Supplies per Ton.	Total per Ton.
Mining { Powder	.....	$0.12	.....
Mining { Other supplies	$0.46	0.03	$0.61
Timbering, including square setting	0.17	0.30	0.47
Tramming	0.48	.....	0.48
Total direct cost	$1.11	$0.45	$1.56
Development	.....	.....	0.25
Mine repairs, re-timbering, re-drifting, ventilating, etc.	.....	.....	0.40
Cribs	.....	.....	0.04
Power, electricity for light and power, hoists, compressors, track, tools, drills, smithy, boilers, pumps, pans, and fuel	.....	.....	1.05
Miscellaneous	.....	.....	0.44
Total direct and general cost	.....	.....	$3.74

Timber costs $17 per thousand, framed. Powder, containing 35% gelatine and dynamite, costs 14.5 cents per pound.

Table 589 shows the average milling costs per ton for the district.

TABLE 589. — AVERAGE MILLING COSTS PER TON FOR A COLORADO SILVER-LEAD DISTRICT.

	Per Ton.
Repairs	$0.11
Electricity (power and light)	0.07
Labor	0.42
Supplies	0.03
Total millling	$0.63
Total mining	3.74
Grand total	$4.37

The average wage scale per 8-hour shift during this period was as follows:

Hoisting, engineers, and tool sharpeners	$3.68
Pumpmen, chain gang, machine men, and timbermen	3.43
Head foreman	3.19
Fireman helper, machine helpers, cagemen, and blacksmith helper	2.94
Master mechanic	5.94
Blacksmith	4.44
Carpenters	$3.43 to 4.44
Shift-bosses	4.19
Miners, muckers, and trammers	2.69
Foreman	$200.00 per month

§ 1589. UTAH DISTRICT. — In this important district there are, (1) ore deposits in fault fissures, and (2) replacements in limestone overlaid by 200 feet of quartzite. The only mine successfully working on a fault fissure deposit was the Ontario, which was practically worked out many years ago. Since 1893 most of the ore has come from the limestone deposits. Of these the principal mines are the Daly-West, Daly-Judge, and the Silver King, all of which are very similar. The ore bodies usually have a pitch of between 5° and 15° from the horizontal and are from 50 to 200 feet wide and from 3 to 30 feet thick.

§ 1590. *Costs at Park City Mines.* — As depth is reached the lead, silver, and gold values generally diminish and zinc values predominate. A great deal of gangue occurs in the ore and must be sorted out. From one-third to one-half of the ore mined is of shipping grade. Exploration and development are expensive owing to the dip and inequality of the ore bodies. Their internal factors make the costs high.

The external factors are about the average for the Rocky Mountain region. Table 590 gives the Daly-West production for 7 years.

TABLE 590. — DALY-WEST PRODUCTION FOR SEVEN YEARS.

		Tons.
Crude ore shipped direct		224,418
Ore milled		489,415
Total		713,833
Concentrates shipped		97,634
Total shipments		322,052.00
Lead, 73,942 tons, at $92.00		$6,802,664.00
Silver, 17,167,000 ounces, at 57 cents		9,785,190.00
Gold, 13,847 ounces, at $20.67		286,217.49
Copper, 12,164,000 pounds, at 15 cents		1,824,600.00
Total value at $58.06 per ton		$18,698,671.49
Freight, treatment, and deductions $8,327,000.00 =	$25.86 per ton.	
Cost of mining and milling	13.72 " "	
Total cost	$39.58 per ton	
Profit per ton shipped	$18.48 " "	

Table 591 gives the average results per ton mined in 7 years.

TABLE 591. — RESULTS PER TON MINED.

	Per Ton.
Average value	$28.40
Cost of mining and milling	6.26
Milling losses, average 8 percent*	2.27
Freight, smelting, refining, and deductions	11.66
Total cost	$20.19
Profit per ton mined	8.21

* During the last seven years the reported average savings have been 96.10 percent of the lead and 71.17 percent of the silver. The lead assays must have been made by fire or there must have been errors in sampling and weighing. Figuring that the mill averages to save 75 percent of the silver and lead the total mill losses would be about 8 percent of the entire product.

Table 592 gives a summary of the costs at the Daly-West mine from 1900 to 1906 inclusive.

TABLE 592. — SUMMARY OF DALY-WEST COSTS FOR SEVEN YEARS.

	Per Ton of Ore Mined and Milled.	Per Ton of Ore and Concentrates Shipped.
General expense	$0.42	$0.92
Exploration and development	0.60	1.31
Mining	3.38	7.40
(Per ton milled)	(1.36)	.....
Milling	1.00	2.19
Shipping and selling	0.56	1.24
Construction	0.30	0.66
Total	$6.26	$13.72

Costs during 1907 at the Daly-Judge mine were lower than the average. Table 593 gives the costs for 6 years at this property, during which time the property was shut down 2 years for development work. Development work in the whole period has averaged $1.50 per ton.

TABLE 593. — SIX YEARS' OPERATIONS AT THE DALY-JUDGE MINE (213,000 tons).

	Per Ton.
Smelting, refining, marketing, and deductions per ton	$8.66
Mining and milling costs	7.27
Probable mill losses	3.00
Total costs and losses	18.93
Profit per ton	1.00
Total value per ton of ore as mined	$19.93

Table 594 gives details of cost at the Daly-Judge in 1907.

TABLE 594. — DETAILS OF COST AT DALY-JUDGE MINE FOR 1907.

	Per Ton.
Mining	$3.03
Exploration and development	0.40
Concentrating	0.95
Shipping and selling	0.33
General expense	0.53
Construction	0.21
Total per ton	$5.45

The Silver King does not publish its reports, but its costs are approximately $9.40 per ton mined and milled and $15.50 per ton of selected ore and concentrates shipped.

It is probable that considerable profits are derived by the smelting, for example, on Daly-West shipments. These ores have averaged about 25% in lead and copper with a gross value of $58.06 a ton on average prices.

Table 595 gives the estimated probable cost of smelting these ores and the profit to the smelter.

TABLE 595. — PROBABLE SMELTER COSTS.

	Per Ton.	Per Ton
Smelting, refining, marketing, and losses have averaged		$25.86
Actual loss in smelting, 5 percent of total value	($58.00)	2.90
Remaining		$22.96
Freight on 500 pounds of bullion to New York at $16.00 per ton	$4.00	
Refining 500 pounds of bullion at $7.00 per ton	1.75	5.75
Remaining		$17.21
Actual cost of smelting, per ton, about	2.50	
Amortization, taxes, general expense, etc., perhaps	2.50	5.00
Remaining		$12.21
Actual cost	$10.75	
Actual cost including losses	$13.65	

Assuming the above figures to be true and that 1 ton of ore is shipped for every 2.2 tons mined we have the following actual costs:

	Per Ton.
Mining, milling, and all costs to mining company	$6.26
Smelting, refining, and marketing	5.55
Total cost per ton mined	$11.81

Since the mill losses must be estimated at not less than 10% on low-grade ores and the smelting losses at 5% more, the actual costs can only be 85% of the original value. In round numbers, therefore, an ore in Park City must be worth $14 a ton before there can be any profit in it for anybody. At average prices this figures about 10% lead and 8 ounces silver per ton.

LEAD-ZINC.

§ 1591. MISSOURI DISTRICT. — Missouri is second in the list of states in the production of lead ores, and first in that of zinc ores. The mining is confined to two districts, the Southeast and the Southwest. The Southeast district produces ores from which, in round numbers, 100,000 tons of pig lead are smelted yearly; from the ores of the Southwest or Joplin field the product is 25,000 tons of lead and 140,000 tons of spelter.

In both fields the external conditions are favorable. Mining is conducted in the midst of the great agricultural regions of the Mississippi Valley, where the cost of living is low, labor abundant, fuel and transportation cheap, and markets close at hand. The internal factors are also favorable to low costs. The depths reached are not great, the ore bodies are fairly large. In Southeast Missouri the ore bodies are persistent, though somewhat irregular, while those of the Joplin field are not only irregular but non-persistent. In both districts, however, exploration by drilling provides against underground perplexities. In both fields also, the ores are favorable for water concentration.

§ 1592. SOUTHEAST MISSOURI LEAD. — Mining in Southeast Missouri is based on ore bodies that carry an average of about 5% in metallic lead, or a little more. The galena is sprinkled through limestone and the ore is called disseminated; although usually most of the lead is confined to rich streaks. The ore concentrates well and can be turned into a 65 to 70% product, with a saving of 80%. Commercially speaking, therefore, the ore yields about 4% net lead.

The formation lies approximately flat, though grades of from 3 to 10% are not uncommon. The problem of blocking ore out ahead has resolved itself entirely into diamond drilling from the surface. This varies in difficulty according to the depth, which varies throughout the district from 300 to 800 feet. Holes are put down about 200 feet apart, and if ore is found in considerable

amount in 15 or 20 holes, enough is blocked out to justify sinking a shaft. Even where ground is most carefully drilled, the actual mining shows from 20 to 100% more lead ore than the drilling would indicate. Where drilling could be done 10 years ago for 40 to 50 cents a foot, in 1907 it cost from $1 to $1.25 per foot. In the deeper workings the cost averages as high as $1.50 per foot.

§ 1593. *Extent of the District.* — Around Flat River, Bonne Terre, and Irondale, we find a triangular area containing about 60 square miles, or 38,000 acres. This area is now producing metallic lead at the rate of about 90,000 tons a year. The output doubled between 1901 and 1907.

At Doe Run, Mine La Motte, and Fredericktown are also important ore deposits. At Fredericktown the North American mine has opened up considerable ore carrying 5% copper and 2.5% in nickel and cobalt. Everything indicates that there are possibilities of extension in copper mining in that neighborhood.

§ 1594. *Problem of Mining.* — The most difficult part of actual mining is the preliminary exploration by drilling. The stoping is very simple. No timbers are used. Round pillars of ore are left containing from 10 to 15% of the ore. Underground diamond drilling is necessary in some mines to prospect ahead for water channels. Some shafts make from 1,300 to 1,500 gallons of water per minute. The usual output from each shaft is about 300 tons a day.

The most economical power equipment used in the district is at the plant of the St. Louis Smelting and Refining Company. Here a central steam plant operates a compressor and an electric generating plant. The mill, hoists, and pumps are operated by electricity. Electric trams are used to haul the ore from various shafts to the mill.

The cost of mining, hoisting, and pumping is from $1 to $1.50 per ton. To this may be added 10 cents a ton for drill prospecting, and about 10 cents a ton for hauling the ore to the mill. The total cost of ore is, therefore, from $1.20 to $1.70 per ton at the mill.

§ 1595. *The Problem of Milling.* — The cost of milling in a 1,000-ton plant is from 30 to 75 cents a ton. The cost of a concentrating mill, together with a power plant for the mines, may be estimated at $500,000 for 1,000 tons capacity. The new plant, built by the Federal Lead Company, is expected to handle about 2,400 tons a day. It is built of steel and concrete, has a large air-compressing and electric plant, and elaborate crushing and sampling arrangements. It cost $900,000.

§ 1596. *The Problem of Smelting.* — Smelting may be considered either on a custom or an operating basis. The ore leaves the mill in the shape of concentrates carrying 70% lead and 5% moisture. Freight to East St. Louis is about $1.50 per dry ton. This ore may be sold to custom smelters, who will pay for 90% of the lead at current quotations, and charge from $6 to $8 per ton smelting charges. On this basis, the cost of freight and treatment figures as shown in Table 596.

TABLE 596. — COST OF FREIGHT AND TREATMENT.

	Lead 4 Cents. Per Ton.	Lead 5 Cents. Per Ton.	Lead 6 Cents. Per Ton.
Freight	$1.50	$1.50	$1.50
Treatment, say	7.00	7.00	7.00
Deduction 10 percent, 140 pounds	5.60	7.00	8.40
Total	$14.10	$15.50	$16.90

On an operating basis the cost is about $6 per ton and the loss, with the best practice, 3%. Table 597 gives the costs per ton which would be made in operating a plant handling say 3,000 to 4,000 tons a month.

TABLE 597. — COST PER TON OF OPERATING A LARGE SMELTER.

	Lead 4 Cents.	Lead 5 Cents.	Lead 6 Cents.
Freight and treatment	$7.50	$7.50	$7.50
Deductions 3 percent, 42 pounds	1.68	2.10	2.52
Total	$9.18	$9.60	$10.02

On average prices there would be a saving of about $5.50 per ton of concentrates in operating a smelter.

The cost of the whole operation thus far may be figured as shown in Table 598.

TABLE 598. — COSTS OF MINING AND MILLING PER TON.

Prospecting	$0.10 to $0.10
Development by shafts	0.15 to $0.15
Mining	1.00 to 1.50
Transfer to mill	0.10 to 0.10
Milling	0.30 to 0.75
General expense	0.10 to 0.26
Crude ore costs per ton	$1.75 to $2.86

These figures represent the two extremes, that is, those obtained under the most favorable and most unfavorable surroundings and condition.

Tables 599 and 600 give figures which follow out these two sets of conditions through the smelter to the production of pig lead from various grades of ore; lead being assumed at 5 cents per pound.

TABLE 599. — MINING AND MILLING COST, $1.75. EXTRACTION 75 PERCENT.

	Yield in Concentrates. Percent.	Smelting Cost.	Total Cost.	Cost per Pound of Lead in Cents.
With 4 percent ore	4.3	$0.41	$2.16	3.60
With 6 percent ore	6.4	0.61	2.36	2.62
With 8 percent ore	8.6	0.83	2.58	2.15
With 10 percent ore	10.8	1.04	2.79	1.86

TABLE 600. — MINING AND MILLING COST, $2.86. EXTRACTION 85 PERCENT.

	Yield in Concentrates. Percent.	Smelting Cost.	Total Cost.	Cost per Pound of Lead in Cents.
With 4 percent ore	4.86	$0.47	$3.33	4.90
With 6 percent ore	7.29	0.70	3.56	3.49
With 8 percent ore	9.70	0.93	3.79	2.79
With 10 percent ore	12.14	1.17	4.03	2.37

Table 601 gives the total cost per pound of lead if all costs remain the same except milling.

TABLE 601. — TOTAL COST PER POUND OF LEAD.

	1. Saving 75 Percent Lead. Cents.	2. Saving 85 Percent Lead. Cents.
With 4 percent ore	3.60	3.93
With 6 percent ore	2.62	2.84
With 8 percent	2.15	2.30
With 10 percent ore	1.86	1.98

It appears that on any ore likely to be mined in the Flat River district, cheap milling is essential to economy; and that it will not pay to increase costs to the extent of even 45 cents a ton in order to obtain 10 points additional recovery.

§ 1597. FLAT RIVER. — The average cost of producing pig lead for the St. Louis market from this field seems to be from 3 to 3.25 cents per pound. In the years following the panic of 1893, these properties produced pig lead without loss at less than 2.6 cents per pound; but during the boom period of 1906–07, it is doubtful if any of the mines were producing it for less than 4.0 cents.

Table 602 gives in detail the costs under the best and worst conditions for mining and milling in the Flat River district. The average total mining cost is nearer $1.30 than $1.86, and some mines average even less than $1.30 per ton.

TABLE 602. — MAXIMUM AND MINIMUM COSTS IN THE FLAT RIVER DISTRICT.

	Cost per Ton. Minimum.		Maximum.
Labor	$0.970	to	$1.190
Coal and air charge	0.120	to	0.290
Blasting	0.086	to	0.120
Supplies	0.032	to	0.069
Repairs	0.086	to	0.147
Sundry charges	0.011	to	0.042
Total mining	$1.305		$1.858
Labor	$0.078	to	$0.100
Supplies	0.024	to	0.036
Water	0.002	to	0.010
Crushing	0.017	to	0.040
Maintenance	0.021	to	0.039
Other departments	0.022	to	0.028
Chemist	0.083	to	0.085
Miscellaneous	0.001	to	0.001
Total milling	$0.248		$0.339

§ 1598. THE SOUTHWEST MISSOURI ZINC DISTRICT. — This district produces 60% of the spelter of the United States, and therefore bears nearly the same relation to the zinc business as Lake Superior mines bear to the iron business of the country. The Joplin field covers perhaps 2,000 square miles with operations principally centralized about Webb City and Joplin, Missouri, and Galena, Kansas. The Webb City zone produces about one-half the output of the entire field and it is this zone which will be described here. This productive area extends from Oronogo on the northwest to Porto Rico and Duenweg on the southeast, a distance of 10 miles with an average width of perhaps three-quarters of a mile. This area of production is estimated at 4,800 acres. The total production of this zone has been approximately 3,000,000 tons of zinc and lead ore, derived from mining and milling 75,000,000 tons of rock. This represents a value, under average prices, of about $90,000,000.

Practically all of the successful sheet-ground mining to date has been confined to the Webb City zone. It is generally believed that the sheet ground yields about 3% of the rock mined in zinc or lead ore. The zinc ore obtained averages not far from 60% zinc; the lead ore about 80% lead. The ore is obtained by crushing and washing in concentrating mills, which save approximately 60% of the zinc and 90% of the lead actually contained in the rock. The total saving approximates 66.67%.

§ 1599. *Exploration.* — Practically the only method now employed in searching for ore is churn drilling. An experienced driller, if he finds a little ore and open ground, will place his following holes not over 50 feet from the first until he discovers pay ore. Since the drilling costs an average of 80 to 90 cents a foot and the holes will average about 175 feet deep, we may place the cost of exploration at about $500 per acre.

In sheet ground no such amount of drilling is necessary. Because of the uniformity of such deposits, exploratory holes, about 200 feet deep, are often only drilled, one hole in two acres. The cost of each hole will approximate $200, therefore to explore this kind of ground the probable cost is less than $100 per acre.

§ 1600. *Mining Methods.* — As the extreme depth is only 250 feet and the average depth in mining perhaps less than 175 feet, a single-compartment shaft can be sunk very cheaply unless there happens to be an excessive amount of water. The average shaft in the Joplin district probably does not cost over $4,000. It is also cheaper to open up the ground by numerous shafts and tram on the surface rather than by underground methods. This results in having several shafts supply one mill with ore by means of inclined surface tramways.

The ore is shoveled into buckets called "cans" which hold about 800 pounds each and are elevated by being hooked to a cable wire. In this manner it is possible to average 400 cans per shift or 160 tons. Only two men are employed whose combined wages are approximately $5 per day. The hoist itself costs $250. The derrick in which the hoisting is done, together with the ore bin, costs $600 more. The method is very cheap as the actual cost is probably not over 5 cents per ton hoisted.

In the upper ground the ore is taken from large irregular chambers and in the sheet ground from flat deposits from 8 to 20 feet thick that are as regular over considerable areas as a seam of coal.

§ 1601. *Milling Methods.* — The Joplin mills confessedly only extract about 60% of the zinc ore. The proportion varies greatly at different mines, due to the difference in the character of the ore. The mills are suited to save only the free ore, which can be easily separated from the gangue by rather coarse crushing.

The ordinary mill costs from $10,000 to $20,000 and has a capacity of about 15 tons an hour. The largest mills in the district have cost about $50,000 and have a capacity of 35 tons an hour.

§ 1602. *Losses in Mining.* — Let us take 100 tons of ore containing 5% of metallic zinc in the ground and Table 603 gives an approximate average statement of the costs and losses.

TABLE 603. — COSTS AND LOSSES ON ZINC ORE.

	Costs.	Losses.	Total.
Spelter value of 100 tons of 5 percent ore at 5 cents, St. Louis			$500.00
Loss in mining, 10 percent		$50.00	
Mining, 90 tons at $1.05	$94.50		
Loss in milling, 40 percent		180.00	
Milling, 90 tons at $0.25	22.50		
Loss in smelting, 12 percent		32.40	
Smelting and amortization	54.00		
Transportation	9.15		
Total	$180.15	$262.40	$57.45

This shows a recovery by mining of $450; by milling, of $270; by smelting, of $237.60. The approximate costs are 36.1% of the total value, the losses 52.5%, and the profit 11.4%. The profit on recovered value is 24.2%.

§ 1603. *Joplin Cost Statements.* — Table 604 gives a statement of mining costs at the Grace Zinc Company which probably gives a fair idea of the average costs for mining and milling in the Joplin district. Between April 1, 1905, and January 1, 1908, the Grace Zinc Company hoisted 390,346 cans representing 121,291 tons milled, and saved, 5,307 tons. This figure of 121,291 tons is based on the tonnage content of cars holding from 1.5 to 2.5 tons in which the ore is hoisted to the mill. A considerable amount is rejected as waste. Most cans are assumed to hold 1,000 pounds while they actually hold from 800 to 900 pounds. If we were to assume that the cans in this case contained 800 pounds each, our tonnage would be roughly 156,000, and the costs, instead of totaling $1.41, would be reduced to $1.10. If the cans were estimated at 900 pounds each the tonnage estimate would be about 175,000 and the cost would fall to 98 cents.

TABLE 604. — MINING COSTS — GRACE ZINC COMPANY — APRIL 1, 1905, TO JANUARY 1, 1908.

	Per Ton of Dirt.	Per Ton of Concentrates.
Breaking ore	$0.40	$9.03
Tramming	0.21	4.85
Hoisting	0.15	3.32
Pumping	0.10	2.27
Exploring	0.09	2.10
Timbering		0.09
Milling	0.23	5.33
General expense	0.15	3.56
Construction	0.08	1.74
Total	$1.41	$32.29

This makes a total cost of $171,364.75. The net value of the ore was $221,230.21, after a royalty of $38,957.55 had been paid, thus leaving a net profit of $49,865.46. Figuring that $3,000 a year in addition to the costs given would be an ample return on the actual plant investment, this, in Table 604, would amount to less than $8,000 and would increase the total costs per ton of dirt to $1.48, and per ton of concentrates to $33.79.

Assuming the last figure to represent the true mining and milling cost, and that concentrates containing 60% zinc are smelted at a cost of $14 a ton with a loss of 12%, we find that 1,056 pounds spelter costs $47.79 or 4.53 cents per pound, which is believed to be a fair average cost of producing spelter.

GENERALIZATIONS ON LEAD MINING.

§ 1604. On economic grounds we may divide lead ores into three groups: (1) Disseminated sulphide ores that can be concentrated in high ratio; (2) sulphides from fissure veins, almost invariably carrying silver, often gold and copper, and concentrating in a moderate ratio; (3) carbonates and rich bunches of sulphides which will not concentrate except by hand sorting.

1. In the first class fall the Missouri lead ores. The problem of mining here, and the costs, are closely parallel to those of the Lake Superior copper mines. In both cases the costs for mining, milling, and smelting will fall between $2 and $3 per ton milled. The disseminated lead ores contain about three times as much lead as the Lake Superior copper ores do of copper, and the price of lead is one-third the price of copper.

2. The examples of the Coeur d'Alene and of Broken Hill in Australia afford a close approximation to the problem of copper mining at Butte. In both cases mining is rather expensive, owing to the requirements of extensive exploration, expensive timbering and filling, and some selection of ores. The proportion smelted is lower in the case of lead mines, but on the other hand the concentrates are much richer, imposing higher charges for freight and refining of bullion. In the Coeur d'Alene mines a rough average is 6.5% lead and 3.5 ounces silver. This may be approximated as equal to 174 pounds lead per ton. The Broken Hill ores average 9.9% lead, 5.5 ounces silver, and 0.005 ounce gold, equivalent to 272 pounds lead per short ton. These figures may be compared with the equivalent of 87 pounds copper per ton, the average of Butte ores for 13 years.

In the case of the Cœur d'Alene the actual mining, milling, and smelting costs have been computed at $5.70 per ton, and at Broken Hill $9 per ton, the difference being mainly in the degree of concentration. The cost of lead is about the same in both places. Here again we note that the lead occurs in the ores in about three times the quantity of copper in Butte ores, costs one third as much, and sells for less than one-third the price.

3. No clean-cut example of the third class of lead ores has been given, but the Park City mines serve as a partial example. The mines of Tintic, Utah; Eureka, Nevada; Sta. Eulalia, in Mexico; Leadville and Aspen, Colorado, and many others belong to this type. Undoubtedly the costs are high. Hand-picked ores in the Cœur d'Alene and Park City cost for mining from $10 to $15 per ton. Smelting costs are correspondingly high. Such ores are very seldom mined for lead alone; the values in silver and gold are very often much higher than for lead. Undoubtedly, on the average, the costs are nearly proportionate to the values. For ores of this class the cost of exploration is inevitably high. Most hand-selected non-concentrating lead ores cost for mining and marketing an average of $30 per ton, while some go as low as $20 per ton.

GOLD.

TELLURIDE ORE.

§ 1605. CRIPPLE CREEK DISTRICT, COLORADO. — All ores shipped from Cripple Creek are concentrates produced by hand sorting, which is equivalent to milling in other camps, and the amount of development work necessary to find the ores is probably 50 or 100 times greater than in the Lake Superior copper and iron mines.

The ore is of medium hardness. Wages average $3.40 for 8 hours. Coal costs about $4.60 per ton, and timber averages $20 per thousand.

At the larger properties of Cripple Creek the cost of mining and sorting the

total product of ore and waste is from $2.50 to $3.50 per ton, this cost covering all the expenses of the companies.

The following figures are the costs for one month at one of the largest properties: During the month 18,910 tons of rock were mined from 40 different and separate stopes at a cost of $2.07 per ton, or $39,123.70. The following development work was performed in addition to the stoping; 2,237 feet of drifts, cross-cuts, winzes, and raises in 46 different headings, at an average of $6.98, or $15,612.93. Ore sorting and loading cost $8,999.98. This makes a total of $63,736.61. The total amount of rock hoisted, both from stopes and development work, was 24,931 tons, at $2.56, which was reduced by sorting to 7,093 tons of shipping ore, at $8.99.

The Portland mine has small ore bodies which are more or less scattered and require for exploitation a large amount of development work, performed, to a considerable extent, at random. Table 605 gives the work performed and the costs at this property.

TABLE 605. — RESULTS AND COSTS AT THE PORTLAND MINE.

	Tons.
Tons per 2.25-inch machine drill in all stopes	12.4
Tons in wide stopes (one-man machines)	17.7
Tons per machine in drifts	5.3
Tons per foot in drifts	2.5
Labor cost on ore broken in large stopes	$0.226 per ton.
Labor cost on ore broken in drifts	0.750 per ton.
Labor cost for machine drilling in drifts	1.860 per foot.

The small drills used are light enough to be operated by one man, who is paid $4 per shift. Tramming costs about 20 cents per ton, which is nearly as cheap as it can be done in the district. Timbering costs, on an average, 50 cents per ton, and sorting, which is equivalent to milling or concentrating in other places, costs about 50 cents per ton. The latter high figures are justified by the internal conditions. The expense of hoisting is high, 22 cents per ton, due to the poor design of Cripple Creek hoisting plants.

QUARTZ-PYRITE GOLD DEPOSITS.

§ 1606. Included in the class of quartz-pyrites mines are all of the properties of the Witwatersrand in the Transvaal, in fact all the gold mines of South Africa, nearly all the mines in Eastern Australia, those of the Kolar district in India, of El Oro in Mexico, of California, Nevada, and Douglas Island, Alaska. In general, these ores are a light-colored or whitish quartz containing from 0.25 to 10.0% of iron pyrite, and other sulphides in varying but usually subsidiary amounts. Deposits of this kind have proved to be extensive, often persistent to great depths, and are worked on a large scale.

§ 1607. DOUGLAS ISLAND DISTRICT, ALASKA. — The group of mines on Douglas Island, Alaska, known as the Treadwell, Mexican, and Ready Bullion, furnish ore for 780 stamps at the rate of 1,200,000 tons a year. This work with good reason stands at the head of the list of quartz-pyrite operations, furnishing an example of the simplest metallurgical problem, the lowest costs, and perhaps the best management to be found in this class of mining.

The largest of these ore bodies is the Treadwell, which is 400 feet wide by 1,000 long. The Mexican and Ready Bullion ore bodies are approximately 20 feet thick and from 500 to 1,000 feet long. These ore bodies are situated near a good harbor with the most convenient and cheapest method of transporting coal, timber, and other supplies. Auriferous iron-pyrite concentrates are shipped

800 miles to the Tacoma smelter at a cost of $1.72 per ton. The climate, though rainy, is mild and pleasant, corresponding to that of Scotland or Southern Norway. Labor, although costing 32 cents per hour, owing to its efficiency, is really cheap. In addition to these advantages an abundance of water-power is available. Little pumping is necessary in the mines. These external factors are so favorable as to be, perhaps, unrivaled.

§ 1608. *Internal Factors.* — The internal factors are also exceptional. The ore bodies are large and firm and stand nearly vertical between solid walls. The metallurgical problem is the simplest.

The following conditions are thus encountered: Several million tons of ore favorably situated for cheap handling, but containing less than $3 per ton. In order to make any profit cheap methods of mining and milling are required.

About 75% of the ore can be mined without timbers from large chambers kept full of broken ore, only enough being drawn off at the bottom to afford room for the miners at the top. In the widest deposits this process costs $1 per ton, and in the narrower bodies $1.20 per ton. 3.75-inch machine drills, using 2.15 times as much air as the 2.25-inch drills at the Portland mine in Cripple Creek, are operated by two men at a cost of $7.87 per day. Timbering costs hardly anything, tramming about 3 cents, and hoisting about 11 cents per ton at the Mexican and Ready Bullion mines. Table 606 gives an idea of the results and costs of the average work in the district.

TABLE 606. — RESULTS AND COSTS AT THE TREADWELL MINES.

	Tons.
Tons per machine in all stopes	34.96
Tons in wide stopes (Two-men machines)	34.96
Tons per machine in drifts	9.6
Tons per foot in drifts	7.0
Labor cost per ton on ore broken in large stopes	$0.226 per ton.
Labor cost per ton broken in drifts	0.820 " "
Labor cost per foot of drift for machine drilling	0.575 per foot.

Milling costs from 17 to 27 cents per ton, with an apparent extraction of 90% by using a water-actuated stamp mill, amalgamation, and concentration. The value recovered is about equally divided between free gold, saved by amalgamation, and auriferous pyrite, saved by concentration, which constitutes about 2% of the original ore.

The actual results and average costs up to the end of the reports for 1907 for the various mines are given in Table 607.

TABLE 607. — ACTUAL RESULTS AND AVERAGE COSTS AT THE TREADWELL MINES.

	Treadwell.	Mexican.	Ready Bullion.
Tons milled	8,485,085	2,447,063	1,841,079
Tons in sight	4,982,883	794,924	1,378,651
Feet of development work in 14 years	74,717	59,960	27,362
Tons developed per foot, approximately	120	54	100
Total value recovered per ton	$2.44	$2.55	$1.89
Profits, operating, per ton	1.16	0.77	0.25
Total operating costs per ton	1.28	1.78	1.64
Last depreciation figures per ton	0.21	0.23	0.35
Total estimated cost per ton	1.49	2.01	1.99

The shipment and treatment of concentrates costs about $6.75 a ton and when spread over the original ore milled, costs from 10 to 14 cents a ton.

From Table 607 it appears that the combined mines have treated 12,773,227

tons of quartz worth $28,423,257.36 or $2.23 per ton for a total operating cost of $1.43 per ton, to which 24 cents per ton must be added as a fair estimate of the value of the plants employed; the total estimated cost being $1.67 per ton and the profit 56 cents or about 25% of the gross value recovered.

Table 608 gives the results obtained at these mines during 1907.

TABLE 608. — RESULTS AT THE TREADWELL MINES IN 1907.

	Treadwell.	Mexican.	Ready Bullion.
Tons milled	702,953	214,263	213,370
Cost of mining and developing per ton	$1.00	$1.19	$1.00
Milling per ton	0.17	0.27	0.36
Shipping and smelting concentrates per ton	0.12	0.12	0.11
General expense per ton	0.04	0.09	0.07
Construction per ton	0.04	0.01	0.01
Total operating per ton	$1.37	$1.68	$1.55
Depreciation per ton	0.21	0.23	0.35
Grand total per ton	$1.58	$1.91	$1.90

§ 1609. GRASS VALLEY DISTRICT, CALIFORNIA. — Table 609 shows the work performed by a property at Grass Valley, California, during August, 1904, operated through one shaft. It is a fair average of the district.

TABLE 609. — OPERATIONS AND COSTS AT GRASS VALLEY, CALIFORNIA, IN AUGUST, 1904.

	Stoping.	Drifting.	Stoping and Drifting.
Tons of ore mined (quartz milled)	3,689	811	4,500
Tons of waste mined	658	1,399	2,057
Tons of ore and waste hoisted	4,347	2,210	6,557

417 Feet Drifted Between 30th and 40th Levels.	Per Ton of Quartz.	Per Foot Drifted.	Per Ton Quartz.
Mining, beaking — Labor	$0.64	$3.05	$0.83
Mining, beaking — Powder, candles, etc.	0.22	2.02	0.36
Machine drills — Labor, power, supplies	0.41	1.46	0.49
Tools, etc. — Labor and supplies	0.14	0.41	0.16
Timbering — Labor and supplies	0.11	0.46	0.14
Tramming — Labor, supplies, and power	0.80	1.64	0.82
Hoisting	0.27	1.16	0.34
Blacksmiths and mechanics	0.21	0.87	0.26
Total mining	$2.80	$11.07	$3.40
Pumping	0.51	2.15	0.63
Miscellaneous and general	0.25	1.04	0.31
Office and superintendence	0.16	0.53	0.18
Total contingent	0.92	$3.72	$1.12
Hauling	0.09	.....	0.09
Milling	0.46	.....	0.46
Cyaniding	0.35	.....	0.35
Total milling	$0.90	.....	$0.90
Grand total	$4.62	$14.79	$5.42
Grand total per ton of ore hoisted	$3.92	.....	$3.72

§ 1610. BLACK HILLS DISTRICT, SOUTH DAKOTA. — The Homestake is the greatest gold mine in the world in point both of tonnage and of gross value produced. In eight recent years the output has averaged as shown in Table 610.

TABLE 610. — RESULTS AT THE HOMESTAKE MINE FOR EIGHT YEARS.

		Per Ton.
Tons milled	9,383,114	.....
Gold recovered	$34,638,518.00	$3.69
Cost	28,587,300.00	3.04
Profit	6,051,218.00	0.65

It is to be observed that the costs are more than twice as high as at the Treadwell group. The external conditions are not as favorable as at Douglas Island. The wages are about the same, but there is not such a good supply of water and timber and transportation is more costly. The cost of water alone is approximately 10 cents a ton at the Homestake.

The internal factors would appear to be about the same. A vast body of silicified slate has been followed from the surface to a depth of nearly 1,600 feet. The thickness is several hundred feet. The metallurgical problem is simple; 4.7 tons are crushed per stamp per day. Amalgamation is followed by cyaniding the tailings at a cost of 18 cents per ton stamped.

There are 1,000 stamps employed on Homestake ore in six different mills. Table 611 gives the costs per ton of the whole process in 1907.

TABLE 611. — COSTS PER TON AT THE HOMESTAKE IN 1907.

	Per Ton.
Milling and amalgamating	$0.44
Cyaniding	0.18
Slime treatment and construction	0.24
Total	$0.86

The recent cost for mining and development is $2 a ton. For mining at the rate of 4,000 tons a day from a single ore body this seems high. Possibly the methods are not good; a more wasteful one might be more profitable.

§ 1611. SAN JUAN DISTRICT, COLORADO. — The external conditions at the Camp Bird property are unfavorable. The altitude of the mine is 11,300 feet and of the mill 7,800 feet in steep and snowy mountains. Wages are about average for the Rocky Mountain region, but it is not to be supposed that men are capable of sustaining their best exertions at such an altitude. Supplies have to be hauled 8 miles to the mine and 6 miles to the mill from the railroad station at Ouray, over a steep mountain road often blocked with snow.

The internal factors are as follows: The ore occurs in extensive shoots in a nearly vertical quartz vein from 3 to 10 feet thick. In a total length of 4,500 feet explored there are four ore shoots aggregating 1,700 feet long. This has involved an expense for development of 76 cents a ton. Stoping is done as at the Treadwell mine.

Table 612 (see opposite page) gives the cost for 1906–07, stated to be very near the average.

These costs are much higher than those of the Liberty Bell mine a few miles away. The reason undoubtedly is the higher grade of the Camp Bird ore; this accounts for higher costs in taxes, freight, and treatment, etc., and furnishes the excuse for pretty liberal fees and management.

At the Liberty Bell mine 34 tons of ore per foot of development work have been blocked out. The average cost per foot of delevopment seems to be about $10, and per ton delevoped, $0.30. The stoping width is about 5 feet.

Table 613 gives the results of operations at the Liberty Bell mine extending over a period of 2½ years.

TABLE 612. — COSTS AT THE CAMP BIRD MINE, 1906–07.

	Per Ton.
Blocking-out ore	$0.76
Ore breaking	0.56
Timbering	0.73
Loading and tramming	0.76
Electric lighting	0.01
Engineering and surveying	0.05
Mine sampling and assaying	0.06
Foremen, bosses, etc.	0.22
Power	0.39
Maintenance	0.43
Other expense — diamond drilling, hoisting, etc.	0.39
Total mining	$4.36
Tramway expense, mine to mill	0.20
Stamp mill expense	1.25
Cyanide expense	0.61
Freight, smelting, and selling concentrates	1.75
General expenses, consulting engineer, taxes, etc.	3.06
Depreciation of plant	0.85
Survey and labor on unpatented claims	0.16
Total	$12.24

TABLE 613. — AVERAGE COSTS AT THE LIBERTY BELL MINE, JANUARY 1, 1905, TO JULY 1, 1907.

Average yearly tonnage mined ..... 101,369 tons.

	Labor per Ton.	Supplies per Ton.	Total per Ton.
Foremen, shift-bosses, and clerk	$0.1148		$0.1148
Stoping. Powder		$0.0981	
Stoping. Fuse and caps	0.6056	0.0226	0.7637
Stoping. Candles		0.0374	
Hauling and mucking	0.4355		0.4355
Timbering	0.4590	0.1762	0.6352
Power, heat, lights, telephone, etc.	0.0423	0.0940	0.1363
Blacksmithing, track-laying, ditching, hardware, rails, drills, steel, etc.	0.0673	0.0669*	0.1342
Air lines and compressors	0.0205	0.0150	0.0355
Cars, skips, and hoists		0.0425	0.0425
Miscellaneous	0.0128	0.0152	0.0280
Assaying, sampling, surveying, accidents, etc.	0.0474		0.0474
Total mining exclusive of development	$1.8052	$0.5679	$2.3731
Cost of development			0.5353
Total mining per ton mined			$2.9084

* Includes complete cost of new drill equipment.

Average yearly tonnage trammed 2 miles to the mill ..... 101,208 tons.

Foremen and linemen	$0.0219		$0.0219
Other	0.2089	$0.0990	0.3079
Total tramway per ton trammed	$0.2308	$0.0990	$0.3298

Average yearly tonnage milled ..... 101,532 tons.

Superintendance	$0.0182		$0.0182
Crusher and conveyor	0.0288	$0.0438	0.0726
Stamping	0.1730	0.1632	0.3362
Re-grinding	0.0250	0.1166	0.1416
Settling and agitating	0.0461	0.00365	0.0826
Filtering	0.0934	0.1117	0.2051
Concentrating	0.1246	0.0354	0.1600
Amalgamating	0.00537	0.0518	0.1055
Precipitating	0.0504	0.0748	0.1252
General. Cyanide		0.3755	
General. Lime		0.0600	
General. Lead acetate	0.0404	0.0316	0.7326
General. General		0.2251	
Total milling per ton milled	$0.6536	$1.3260	$1.9796
Total mining per ton milled	1.8023	0.5670	2.3693
Total tramming per ton milled	0.2300	0.0987	0.3287
Total mining, tramming, and milling per ton milled	$2.6859	$1.9917	$4.6776
Cost of development per ton milled			0.5344
Shipping concentrates per ton milled			0.2500
Total maintenance and repairs per ton milled			0.7977
Depreciation per ton milled			0.3018
Total per ton milled			$6.5615

Since 30 cents per ton is a fair average cost of development, and 53 cents is an abnormal charge which has accrued during the past few years, if we deduct 23 cents per ton we find $6.33 to represent very nearly the actual average cost of operating this property. Since the opening of the mine the average net receipts have been $7.34 per ton milled, indicating, under the present conditions, a profit of about $1.01 per ton. The introduction of the Murphy air-feed drill cut down the cost of stoping about 15 cents per ton.

The company plans to get 2 tons of ore for each man on the mine pay roll, or 6.5 tons of ore for each man rated as a miner in the stopes.

The wage scale is wholly on 8-hour shifts. The average mill wages are $3.50 per shift. Underground men are paid as follows: Shift-bosses, $4.50 and $5; machine men, $4; timbermen, $3.50; hand miners and labor, $3; mechanics and helpers, $3.50 and $5 per shift. This is the San Juan wage scale.

Table 614 gives roughly an analysis of the difference between the costs of the Camp Bird and the Liberty Bell.

TABLE 614. — DIFFERENCE IN COSTS BETWEEN THE CAMP BIRD AND LIBERTY BELL MINES IN FAVOR OF THE LATTER.

	Per Ton.
Underground costs per ton	$1.69
Treatment charges	1.37
General expense	2.30
Depreciation of plant	0.55
Total	$5.91

In general, mining in the San Juan region costs from $7 to $7.50 per ton. The external factors of a rough surface, a severe climate, costly transportation, and a debilitating altitude are all unfavorable. The internal factors are such that only a small tonnage can be maintained. Metallurgically the ores are only fair, and while not markedly difficult, do not seem to permit of a full treatment at a cost of less than $2 a ton. The explanation, therefore, of the big jump in costs from $1.50 at the Treadwell and $3 at the Homestake to $7 in the San Juan is the cumulative effect of a variety of both external and internal factors.

§ 1612. El Oro District, Mexico. — The two principal mines are the Esperanza and El Oro on the San Rafael vein, and the Dos Estrellas on a parallel vein. The gold is finely divided, and will yield by amalgamation only about 15%.

The external conditions are probably about average for gold mining. The wages for natives are low and their labor inefficient. Water-generated electric power is furnished to the mine. The El Oro Company owns a railroad, timber lands, and a sawmill, and presumably supplies the other mines as well as its own with timber and transportation.

The walls of the mines are heavy and often soft. Ordinarily the square-set rooms can be kept open to a height of 40 to 50 feet; then they must be filled. The mines are pretty hot. About 1 foot of development work is required to open up 16 tons of ore.

Table 615 gives costs at the El Oro and the Esperanza mines.

The Esperanza produces other higher grade ores that are not cyanided. These ores are either concentrated and the concentrates smelted, or shipped directly to the smelters. Ores shipped direct have paid for freight, treatment, and shipping expenses about $18.75 per ton.

TABLE 615. — COSTS AT EL ORO AND ESPERANZA MINES.

	El Oro.	Esperanza.
Tons mined	1,080,788	450,000
Tons milled	1,027,282	333,330
Mining per ton	$1.99	$2 80
Development per ton	0.74	0.80
Milling per ton	0.77	2.63
Cyaniding per ton	1.11	
Water per ton	0.02	
Other per ton	0.13	
General per ton	0.90	1.08
Construction per ton	0.36	0.19
Total per ton	$6.02	$7.50

The recovery of metals at the two mines is reported for 1906–07, as shown in Table 616.

TABLE 616. — RECOVERIES AT EL ORO AND ESPERANZA MINES.

	Gold. Percent.	Silver. Percent.	Total Value. Percent.
Esperanza	90.64	57.33	86.20
El Oro	90.28	68.55	86.63

§ 1613. KOLAR DISTRICT, MYSORE, INDIA. — The principal mines are the Mysore, Champion Reef, Ooregum, and Mundydroog. The climate is tropical. The center of the field is 183 miles from the important seaport of Madras. Most supplies are more expensive than in the United States, in the proportion of perhaps two to one.

§ 1614. *Labor at Mysore.* — Of the labor employed 96.2% are natives, 1.6% are Eurasians, and 2.2% are Europeans. The salaries vary from $30 a month for some of the miners to $100 for smiths and machinists and $250 to the highest paid chemists and foremen. Transportation is provided by the companies for Europeans to and from Europe, and quarters, furniture, fuel, lights, and servants also. Men laid up by sickness draw full pay. Considering the debilitating effect of the climate and the loss of time during illness, voyages, and holidays the men probably perform about 50% as much work as similarly paid men in the United States. Assuming that the wages of miners are somewhere near the average for natives, and that Europeans average $5 a day including expenses, and the Eurasians $2, we find an average wage of 36 cents per day for all employees.

§ 1615. *Factors in Mining.* — The internal factors are a single marvelously persistent quartz vein developed for a length of 17,500 feet. The ore is a clean quartz containing 0.25% of pyrite. Some of the largest shoots are more than 4,000 feet deep along the slope and 800 feet wide at right angles to the long axis. The average thickness of the vein stoped is probably between 3 and 4 feet. Taking the vein at large, the poor with the good, the average thickness of mill ore developed on the Mysore property in 1907 was 1.8 feet.

The greatest vertical depth reached is about 2,400 feet in the Edgar shaft of the Mysore. When the mines were less than 1,000 feet deep the ore shoots on the Mysore and Champion Reef seem to have averaged nearly 5 feet in thickness.

§ 1616. *Method of Treatment.* — The milling practice is simple. The ore, when properly sorted, yields a clean quartz with very little clayey matter in it. The process consists of amalgamation in a stamp battery followed by

cyaniding the tailings. A special cyanide process is used for the comparatively small proportion of slimes. The only distinctive fact is that the crushing duty per stamp is low, being only 2.25 tons per day per 1,050-pound stamp. The pulp is put through screens averaging 1,600 apertures per square inch. The low stamp duty is made necessary by the high grade of the ore. In the Transvaal and at the Treadwell, the duty per day is about 5 tons per stamp. Table 617 gives the value and costs per ton at the principal mines.

TABLE 617. — VALUE AND COSTS PER TON.

	Value. Per Ton.	Profit. Per Ton.	Cost. Per Ton.
Mundydroog	$19.03	$9.21	$9.82
Ooregum	16.79	5.96	10.83
Mysore	24.48	13.81	10.67
Champion Reef	21.98	10.33	11.65
Average	$21.26	$10.36	$10.90

§ 1617. *Costs.* — Each foot of development work in the years 1902-07 inclusive opened up a little over 10 tons of ore at the Mysore, the largest and best mine in the district. Drifting and cross-cutting averaged $10 per foot, raises and winzes $40, and shaft sinking $100 per foot. Stoping in a 4.5-foot vein without timbering costs about $1.25 per ton. The cost of drifting by hand in 1899 was $9 per foot at the rate of 15 feet per month, while comparative figures on machine drifting are $11 per foot at the rate of 30 to 35 feet per month. Table 618 gives the cost of raising in this district.

TABLE 618. — COST PER FOOT OF RAISING (10 × 5 feet) 15.6 FEET PER MONTH.

	Per Foot.
Labor, white	$8.25
Labor, native	4.50
Explosives	6.25
Supplies	4.90
Compressed air	21.00
Total	$44.90

Table 619 gives the cost per foot of shaft-sinking in Kolar gold fields.

TABLE 619. — COST PER FOOT OF SHAFT SINKING.

	Mundydroog. 12 by 6 Feet. Per Foot.	Oakley's. 16 by 8 Feet. Per Foot.	Champion Reef. 16 by 8 Feet. Per Foot.	Edgar's Mysore. Circumference 18 Feet. Per Foot.
Labor	$31.27	$32.68	.....	.....
Timber	7.88	25.22	.....	.....
Explosives and supplies	13.40	24.20	.....	.....
Compressed air	32.84	33.88	.....	.....
Hoisting	10.93	4.84	.....	.....
Drill sharpening	0.49	.....	.....	.....
Total	$96.81	$120.82	$145.91	$120.00
Speed per month	15 feet	25 feet	28 feet	20 feet

Equivalent work in the United States may be estimated as follows: Sinking large working shafts (Lake Superior, Butte, Cœur d'Alene, or Cripple Creek), average rate per month 50 feet and costing per foot $100. Raising with complete timbering, 10 × 6 feet, $25 per foot. Drifting in average ground, 5 × 8 feet, about $9 per foot.

Table 620 gives the costs at the mines of Mysore in 1899 according to Hatch.

TABLE 620. — COSTS AT THE MINES OF MYSORE IN 1899.

	Mysore. Per Ton.	Champion Reef. Per Ton.	Ooregum. Per Ton.	Mundydroog. Per Ton.	Balaghat. Per Ton.	Coronadel. Per Ton.
Mine costs	$5.79	$7.15		$7.02	$12.12	$4.87
Mill	1.28	1.68	$9.46	1.41	1.41	1.60
Wheeler pans	.....	0.69		0.21	.....	.....
Cyanide	0.69	0.89		0.75	0.50	0.47
Administration	0.28	0.27	0.44	0.51	0.79	0.76
General charges	0.75	0.61	0.49	0.48	0.31	0.49
Total	$8.79	$11.29	$10.39	$10.38	$15.13	$8.19
Royalty on gold ore	1.58	1.51	0.86	1.12	0.63	0.21
Depreciation	0.41	0.26	0.14	0.40	2.20	0.50
London office	0.39	0.30	0.33	0.65	0.88	0.74
Grand total	$11.17	$13.36	$11.72	$12.55	$18.84	$9.64

These figures are believed to be nearly actual and they give an average cost per ton of ore developed of about $2.10 and per ton of ore milled of $3.30. In 1899 steam power cost $150 per horse-power year and the cost per ton for the power used was more than $3. Electric power is now furnished for $90 a year, reducing the power cost more than $1 per ton, but this is not taken into consideration in the above figures.

It must not be forgotten that the cost of working a high-grade ore is of necessity greater than that of a low-grade ore. For reasons which are evident and many of which have already been stated it is generally unwise, if not impossible, to compare the working costs of high-grade mines, such as those at Kolar, with the low-grade mines of other countries, as, for instance, those of the Witwatersrand in the Transvaal.

There does not seem to be any detail in which the work at these mines is done cheaper than in the United States. In Cripple Creek, or Butte, or the Coeur d'Alene, where wages average ten times as high as at Kolar, work can be done just as cheaply. This is true of drifting, of cross-cutting, of raising, of shaft sinking, of stoping, and on everything on which comparative data has been found.

It is true that supplies cost more than in the United States; nevertheless out of working costs of $8.96 per ton in 1907 at the Mysore mine, labor must account for about $5.50 or 61%. This is the usual proportion in the United States. The number of men employed to mine and mill 194,830 tons of rock in 1907 at the Mysore mine was 8,334 or about 23 tons per man per year. At the Camp Bird mine in Colorado, where external conditions are unfavorable, the ore being of the same grade and the costs nearly the same, the wages are ten times as high and the output per man ten times as great.

The true explanation of the wonderful difference in performance lies in the industrial efficiency of the community by which the men are surrounded.

§ 1618. WITWATERSRAND, SOUTH AFRICA. — The Witwatersrand produces one-third of the world's annual yield of gold. The occurrence of the ores here bears a resemblance to that of the copper conglomerates of Lake Superior and to the Kolar mines of India. Table 621 shows the average working conditions and Table 622 the average costs at nine of the representative mines of the district.

TABLE 621. — AVERAGE WORKING CONDITIONS.

Number of stamps operating	111
Working costs per ton milled	$5.19
Percentage rejected by sorting (probably at surface only)	13
Ratio of tons developed to tons mined	0.90
Width (thickness) of stopes in inches	69
Continuity of reefs, normal for the Rand, unrivaled elsewhere	
Average depth of mining in feet	1,200
Dip of reef	30 degrees
Hardness of ground. Solid quartzite and slate	
Cost of coal per ton delivered at plant	$3.41
Cost of timber per ton of ore mined	4 cents
Gallons of water pumped from mine per ton of ore milled	313
Duty of stamp, tons milled per 24 hours	4.85

TABLE 622. — AVERAGE COSTS.

	Per Ton.	Per Ton.
Development cost per ton	$0.37	
Other mining costs per ton	2.63	
Total cost per ton hoisted		$3.00
Milling, crushing, and amalgamation		0.69
Cyaniding		0.64
General expense at mines		0.25
General expense at head office		0.18
Total per ton		$4.76

These figures represent the costs as they would be if all the ore hoisted were milled, but as 13% is rejected by sorting, the cost is really $5.19 per ton.

§ 1619. THE ROBINSON GOLD MINING COMPANY, in the year 1897, hoisted 203,597 tons, of which 23,197 tons were sorted out on the surface. In addition the amount sorted out underground was estimated at 60,000 tons, making the total stoped about 263,500 tons. The total cost per ton was $6.90 divided between working cost at $6.65 and construction at $0.25 per ton. Table 623 gives mining costs at the Robinson Gold Mining Company corrected for comparison with similar work done at other mines.

TABLE 623. — MINING COSTS. ROBINSON GOLD MINING COMPANY.

	Per Ton.
263,500 tons stoped	$1.68
263,500 tons trammed	0.08
203,597 tons hoisted	0.10
263,500 tons, mine maintenance and pumping	0.18
320,000 tons developed	0.56
Total per ton	$2.60

These figures are as low as those of the Portland mine at Cripple Creek, figured on the same basis. They are not far above those of the Tamarack, or the Calumet & Hecla, where the volume of material in the same area is more than double, and lower than equivalent work in the Mysore mine. The two veins at the Robinson are 18 and 42 inches wide and an effort is made to carry the stopes as narrow as possible. Table 624 gives the milling costs, including the secondary treatment at the Robinson mine.

TABLE 624. — MILLING COSTS AND SECONDARY TREATMENT.

	Per Ton.
Crushing and sorting, 203,597 tons	$0.09
Transport to mill, 180,400 tons	0.03
Milling and maintenance	0.43
Power	0.22
	$0.77
Secondary Treatment	
Vanning, concentrating	0.07
Cyaniding and chlorination	0.70
Total treatment	$1.54

Here we have ore worth $20 a ton, treated with an extraction of 89.3% at a cost that seems low enough. Table 625 gives the general expense at the Robinson mine based on 263,500 tons a year.

TABLE 625. — GENERAL EXPENSE AT ROBINSON MINE.

	Per Ton.
General maintenance	$0.08
General charges	0.28
Machinery, plant, and buildings	0.36
Special charges	0.09
Construction	0.18
Total	$0.99

If all the rock broken, therefore, were treated, we should find the comparison with the costs already given as shown in Table 626.

TABLE 626. — COMPARISON OF COSTS PER TON MINED AND PER TON MILLED.

	Per Ton Milled (as given).	Per Ton Mined.
Mining	$3.90	$2.60
Treatment	1.57	1.54
General expense	1.18	0.81
Construction	0.25	0.18
Totals	$6.90	$5.13

As a mining camp grows older the working costs almost invariably decrease, providing the camp maintains a healthful activity with advancing years. This has been the case at the Witwatersrand. These ores will probably soon be mined with all working and construction costs for $5 per ton.

§ 1620. *Labor Costs.* — It is said that white people average to receive $4.60 per day and colored laborers $0.66 per day, and they are employed in the proportion of 9.2 colored men to one white man. The average wages are probably about $1.18 per day.

An exact comparison of costs and wages in different localities cannot be made because the rocks and conditions are different. In the Rand the rock is harder than at Cripple Creek, and the openings probably average larger, but on the other hand, there is less water to pump. Table 627 gives the average development costs and wages at various localities.

TABLE 627. — AVERAGE DEVELOPMENT COSTS AND WAGES IN DIFFERENT DISTRICTS.

	Per Foot.	Wages per Day.
Rand, average for shafts, drifts, raises, etc.	$20.00	$1.18
Kolar, average for shafts, drifts, raises, etc.	22.00	0.36
Cripple Creek, average for shafts, drifts, raises, etc.	14.00	3.40

IRON.

§ 1621. EASTERN UNITED STATES. — The cost of producing Eastern iron ores and concentrates varies considerably in mines of the same district and even more so in mines of different localities. In Virginia, for instance, in the early part of 1908, the output per man in the same district varied from 0.54 to 2.24 tons, with an average of about 0.91. The average mining cost was about $1.90 per ton, while the expense of washing was only $0.058 per ton. The cost of loading the product and tending the spitzlutte amounted to $0.20 per ton of product.

The expense of mining and milling 153,504 tons of crude iron ore at a plant in the vicinity of Hibernia, New Jersey, in the year 1905, amounted to about $1.50 per ton as shown in Table 628.

TABLE 628. — COST OF MINING AND MILLING IRON ORE IN THE VICINITY OF HIBERNIA, NEW JERSEY.

	Cost per Ton.
Mine labor	$0.6812
Surface labor	0.2329
Fuel	0.2795
Powder	0.0705
Oil	0.0244
Timber	0.0749
Supplies and repairs	0.1113
Milling	0.0300
Total	$1.5047

A very large Eastern iron company reports the cost of mining and milling per ton, in 1907, as $1.165 and $0.620 respectively. These costs are given in considerable detail in Table 629 and represent the average cost to a very large company handling, with magnetic separators, a large amount of comparatively high-grade ore.

TABLE 629. — DETAILS IN THE COST OF MINING AND MILLING EASTERN IRON ORE.

Tonnage. Run of mine ore in 1907 ..... 566,037 tons.

	Labor per Ton.	Supplies per Ton.	Total per Ton.
Superintendence, captains, shift bosses, and timekeepers	$0.040	.....	$0.040
Stoping	0.261	$0.159	0.420
Tramming (underground) tracks and cars	0.313	0.017	0.330
Pumping	0.013	0.021	0.034
Exploration and development	0.025	0.021	0.046
Underground expense	0.008	0.007	0.015
Total mining (underground)	$0.660	$0.225	$0.885
Hoisting	$0.039	$0.054	$0.093
Top landing, tramming (surface), railroad tracks, and yards	0.006	0.000	0.006
Stacking, sorting, and loading ore	0.027	0.001	0.028
Crushing ore	0.010	0.012	0.022

TABLE 629. — (*Continued*).

	Labor per Ton.	Supplies per Ton.	Total per Ton.
Mining engineer	0.006	0.001	0.007
Office expense	0.018	0.012	0.030
Surface expense, warehouse, contributions, and accidents	0.012	0.013	0.025
Depreciation (inventory, improvement, and new construction)	.....	0.044	0.044
Taxes and insurance	.....	0.025	0.025
Total mining (surface)	$0.118	$0.162	$0.280
" " (underground)	0.660	0.225	0.885
Grand total	$0.778	$0.387	$1.165

Tonnage of magnetically separated iron ore for 1907 ..... 337,469 tons.
Tons of crude ore per ton of concentrates ..... 1.308 tons.

Crushing ore	$0.015	$0.024	$0.039
Driers	0.009	0.015	0.024
Separators, magnetic	0.019	0.005	0.024
Power	0.021	0.059	0.080
Haulage expense	0.013	0.003	0.016
Screens	0.007	0.002	0.009
Lubricating machinery	0.007	0.005	0.012
Millmen	0.019	.....	0.019
Superintendence, foremen, and timekeepers	0.022	.....	0.022
General mill expense	0.014	0.011	0.025
Loading products	0.020	0.000	0.020
Building repairs and belting renewals	0.001	0.042	0.043
Car repairs, switching charges, railroad tracks, and yards	0.017	0.087	0.104
Analysis	0.005	0.004	0.009
Office expense	0.017	0.011	0.028
Surface expense, warehouse, contributions, and accidents	0.010	0.004	0.014
Depreciation (inventory, improvement, and new construction)	.....	0.117	0.117
Insurance and taxes	.....	0.015	0.015
Total concentrating	$0.216	$0.404	$0.620

TUNGSTEN.

§ 1622. BOULDER COUNTY, COLORADO. — The average cost of mining and milling Tungsten ores in the Boulder County district of Colorado is summarized in Tables 630 and 631.

TABLE 630. — AVERAGE COST OF MINING TUNGSTEN ORES IN COLORADO.

Operation.	Dimensions in the Clear.	Cost per Foot Including Powder, Fuse, and Caps.							Approximate Cost of Powder, Fuse, and Caps.
		First 50 Feet.	Second 50 Feet.	Third 50 Feet.	Fourth 50 Feet.	Fifth 50 Feet.	Sixth 50 Feet.	Next 200 Feet.	
Shaft-sinking	3.5 by 8.0 feet	$10.00	$15.00	$20.00	$25.00	$35.00	.....	.....	$1.50 per foot.
Drifting	4.0 by 7.0 feet	7.00	7.00	7.00	7.00	7.00	7.00	7.00	0.75 " "
Cross-cutting	5.0 by 8.0 feet	6.00	10.00	10.00	15.00	15.00	15.00	20.00	1.00 " "

TABLE 631. — AVERAGE COST OF MILLING TUNGSTEN ORES IN COLORADO.

Plant.	Ores.	Method of Running.	Power.	Capacity per 24 Hours.	Cost per Ton.
Number 1	Uniform	Continuous	Steam	.....	$1.25
" 2	.....	.....	.....	.....	3.50
" 3	Variable	Interrupted	Water	7 to 25	2.00
" 3	"	"	Steam	7 to 25	4.50
" 3	Uniform	Continuous	Steam and water	25	1.00

The usual milling practice is to crush with stamps, classify, and table the various products.

Testing.

§ 1623. Screens. — For investigating classifier work the author uses a set of screens with openings expressed in millimeters as follows: 2.83, 2.49, 2.08, 1.63, 1.27, 1.10, 0.97, 0.84, 0.68, 0.57, 0.45, 0.36, 0.28, 0.24, 0.20, 0.15, 0.12, 0.10, and 0.08. As will be noted the series is geometrical, the ratio of diameters being approximately equal to $\sqrt[4]{2}$ or 1.189. (See § 1101.) The exact diameter of the screen openings was measured by means of a micrometer microscope. When a careful sizing test is desired it is best to divide the crushed material to avoid abrasion of the particles incident to passing them through a number of sieves. Thus if one has material that has all been crushed through 2 mm., this may be sieved first on 1 mm., yielding oversize through 2 mm. on 1 mm., and undersize through 1 mm. This undersize can then be sieved on say 0.36 mm., giving finally three sizes, *i.e.*, through 2 mm. on 1 mm., through 1 mm. on 0.36 mm., and through 0.36 mm. Beginning now, with the material through 2 mm. on 1 mm., place a small amount of the material on the 1.63 mm. screen and tip the screen back and forth, allowing the grains opportunity to pass through the meshes if they are sufficiently small. Use no washers or other means of forcing the grains through the meshes. After removing the oversize feed on a second portion of the material and proceed as before. In this way there is the minimum amount of crumbling and the sizing is done in an extremely satisfactory manner. When it is desirable to carry the sizing down to extremely fine sizes, beyond the range of screens, the author uses the settling tube described in the following article.

§ 1624. Bardwell Sorting Tube. — The sorting tube shown in Fig. 852 was designed by E. S. Bardwell to do away with the use of beakers for making settling tests. The apparatus consists of a glass tube (1) fitted with rubber stoppers (2) and (3). The lower stopper (2) is perforated and provided with a brass discharge tube (8). The upper stopper (3) is provided with a stuffing box (4), also with a small glass tube (9) for admitting water and a similar tube (10) to allow the air to escape while the apparatus is being filled with water. The discharge tube (8) is closed by the rubber stopper (6). This stopper is provided above with a brass shield (7) and both are securely fastened to the brass rod (5) which is free to move in the stuffing box (4). When making a test the apparatus is held by a clamp so as to be free to turn on a horizontal axis from a vertical position through at least 180°. About 30 grams of the material to be sorted is put in the apparatus, the stoppers adjusted, and the apparatus filled with water and turned about its horizontal axis until the discharge tube (8) is uppermost. The material is allowed to settle until the water in the tube (1) is practically clear, whereupon it is turned end for end and the material allowed to settle say 1,000 seconds. The stopper (6) is then withdrawn by means of the rod (5), and the material which has not settled 500 millimeters in the 1,000 seconds, or material which will not settle 0.5 millimeter per second, may be drawn off into a bottle held beneath the discharge tube (8). The procedure is repeated, allowing the material to settle successively shorter periods of time, varying one from the other in constant ratio. In the case of the first drawings it is necessary to repeat five times in order to be sure to get all the particles. Later one or at most two drawings will be found sufficient. Tables 632 and 633 show two settling tests on stamp-mill pulp made with this device. In figuring the diameters of the particles we use Table 638 and assume the material to be all quartz. Thus knowing the

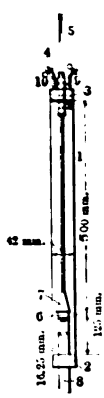

F.G. 852. — BARDWELL SORTING TUBE.

velocity the diameter can be obtained. Fig. 853 shows cumulative curves obtained in the two sizing tests.

TABLE 632. — SORTING-TUBE TEST. SAMPLE I.

Velocity Millimeters per Second.	Diameter Millimeters.	Weight Grams.	Percent of Total Weight.	Cumulative Percent.
71.40	0.690	1.11	4.11	4.11
50.00	0.485	1.35	5.00	9.11
35.70	0.323	1.30	4.81	13.92
25.00	0.204	1.85	6.86	20.78
17.83	0.159	2.06	7.65	28.43
12.50	0.127	1.66	6.14	34.57
8.93	0.116	2.05	7.60	42.17
6.25	0.095	2.32	8.60	50.77
4.46	0.081	1.35	5.00	55.77
3.12	0.070	0.87	3.22	58.99
2.23	0.0575	0.39	1.44	60.43
1.56	0.0478	1.35	5.00	65.43
1.18	0.0401	0.85	3.14	68.57
0.78	0.0324	1.17	4.34	72.91
0.56	0.0272	0.80	2.96	75.87
	−0.0272	6.51	24.13	100.00
Totals		26.99	100.00	

TABLE 633. — SORTING-TUBE TEST. SAMPLE II.

Velocity Millimeters per Second.	Diameter Millimeters.	Weight Grams.	Percent of Total Weight.	Cumulative Percent.
71.40	0.690	2.556	8.33	8.33
50.00	0.485	2.845	9.29	17.62
35.70	0.323	2.992	9.75	27.37
25.00	0.204	2.427	7.92	35.29
17.83	0.159	2.012	6.56	42.85
12.50	0.127	2.607	8.48	51.33
8.93	0.116	2.850	9.31	60.64
6.25	0.095	1.160	3.78	64.42
4.46	0.081	1.950	6.36	70.78
3.12	0.070	1.412	4.61	75.39
2.23	0.0575	0.801	2.61	78.00
1.56	0.0478	0.733	2.39	80.39
1.18	0.0401	0.702	2.29	82.68
0.78	0.0324	0.710	2.33	85.01
0.56	0.0272	0.775	2.54	87.55
	−0.0272	4.122	13.45	100.00
Totals		30.654	100.00	

§ 1625. CLASSIFIERS. — For testing purposes the author uses at present a 12-spigot closed-spigot classifier similar to the one shown in Figs. 854*a*, *b*, and *c*. This classifier as shown is a free-settling classifier. By placing a suitable constriction in the sorting columns above the inlet of the hydraulic water the classifier is made to deliver products with hindered-settling ratios. The 12-spigot classifier working with closed spigot uses a small amount of water, is easily regulated, and responds promptly to regulation. The rising currents may be calculated and the classifier calibrated so as to deliver a series of closely-graded products ranging from coarse in the first spigot to fine in the last. Products obtained in this way are extremely well suited for treatment on the Wilfley table. Attention is called to the classifiers for testing purposes described in Vol. II., pages 1144 to 1146 inclusive.

§ 1626. JIGS FOR TESTING PURPOSES. — For small tests a hand jig with sieve box one foot square (inside dimensions) and about 5 inches deep is most convenient. This device is constructed as shown in Fig. 855. It may be suspended from a helical spring by the ring in the top and jigged upward and downward by hand in a tank of water. The products are removed by skim-

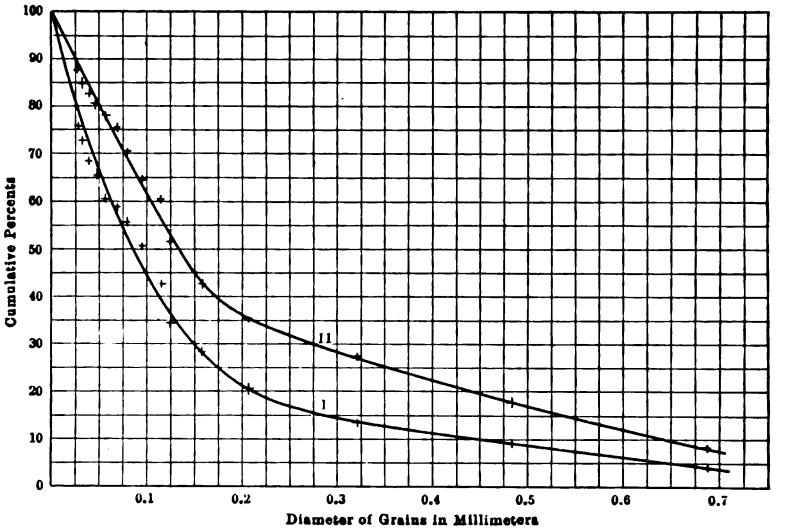

FIG. 853. — CUMULATIVE CURVES OF SORTING-TUBE TESTS.

ming. A smaller hand jig with sieve box 6 inches square is very satisfactory. For testing larger lots of ore a single-compartment Richards' pulsator jig with 4-inch pockets is extremely efficient. Table 511 of Vol. III. shows the result of a test made upon this machine. Where it is desirable to make a hutch product a small Harz jig having 3 compartments is very handy. (See Vol. II., page 1150.)

§ 1627. WILFLEY TABLE FOR TESTING. — Figs. 856*a* and *b* show in plan

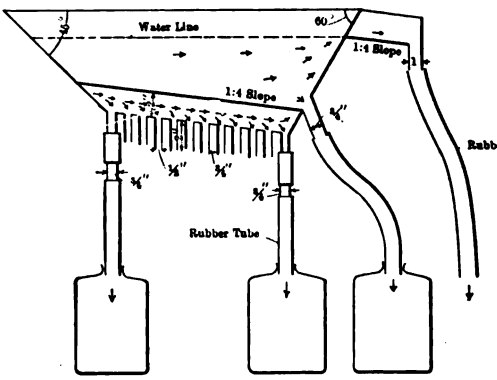

FIG. 854*a*. — 12-SPIGOT CLASSIFIER.

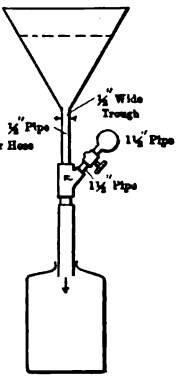

FIG. 854*b*. — END VIEW.

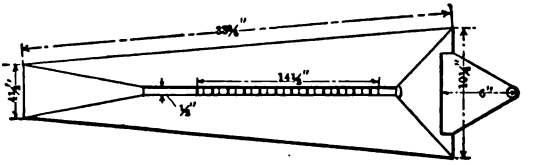

FIG. 854*c*. — PLAN.

and elevation the small Wilfley table as used in the laboratory of the Massachusetts Institute of Technology. The table top is trapezoidal in form and the diagonal line of the riffle tips is brought to the concentrates side about 8 inches above the corner instead of being brought directly to the corner. This renders it much easier to divide between concentrates and middlings. The trapezoidal shape of the table does away with the use of a spray pipe at the concentrates side. The table has a capacity of from 50 to 100 pounds of ore per hour, depending upon the size of the material fed. The work done by the table is extremely satisfactory. The table is equipped with the standard Wilfley-table mechanism. The other details of the table should be sufficiently clear from the cut.

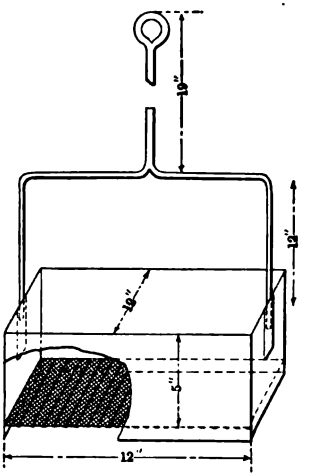

FIG. 855. — HAND-JIG FOR TESTING.

§ 1628. TESTING FOR FLOTATION. — The laboratory device about to be described is intended to determine the selective power of aluminated hydrocarbon oils, at different temperatures, in the concentration and separation of minerals by oil.[8] The selective action of aluminated hydrocarbon oils for mineral particles varies under different temperatures, and an oil may be composed whose selective power for a certain mineral may be perfect at a certain temperature, whereas with the same oil, under another temperature, no selective action may take place. For instance, a certain oil had a strong selective action for zinc minerals at 60° F., but none at all at 160° F. Bearing this in mind it may be possible to separate zinc minerals from other minerals, so producing a marketable product. This particular apparatus

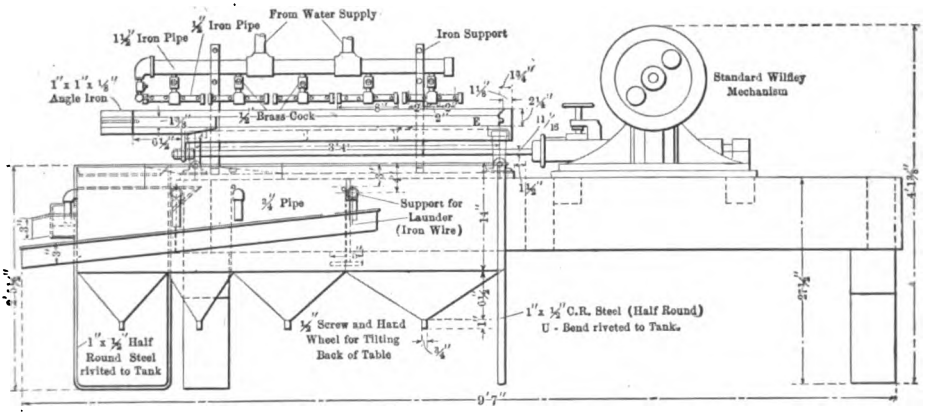
From Water Supply
1¼" Iron Pipe
½" Iron Pipe
Iron Support
1" x 1" x ¼" Angle Iron
½ Brass Cock
Standard Wilfley Mechanism
¾" Pipe
Support for Launder (Iron Wire)
1" x ½" Half Round Steel rivited to Tank
½" Screw and Hand Wheel for Tilting Back of Table
1" x ½" C.R. Steel (Half Round) U - Bend riveted to Tank.
0'-7"

FIG. 856*a*. — LABORATORY WILFLEY TABLE. ELEVATION.

was designed for use in laboratories, by assayers, etc., and illustrates the principle of the process. The manner of maintaining the oil at any given temperature and the means of keeping the oil and ore in contact by agitation have been carefully worked out.

The machine consists of an automatically working centrifugal extractor (1) (see Fig. 857), which separates the mineral from the oil. The glass spitzkasten

or funnel (2) contains a hollow aluminum cone (3) which revolves at about 200 revolutions per minute, being driven by a belt (4), connected with the upright shaft (5) inside of the support (6) to which the spitzkasten is attached.

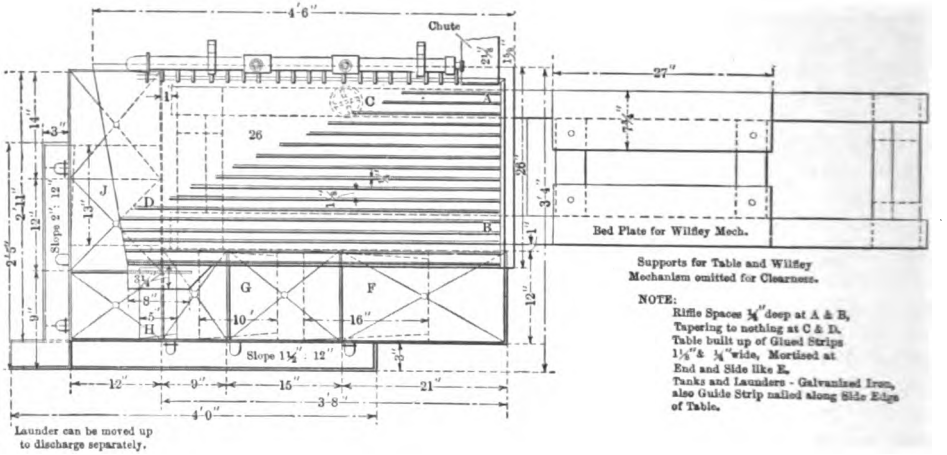
4'6"
Chute
27"
Bed Plate for Wilfley Mech.
Supports for Table and Wilfley Mechanism omitted for Clearness.
NOTE:
Riffle Spaces ¾" deep at A & B, Tapering to nothing at C & D.
Table built up of Glued Strips 1½" & ¾" wide, Mortised at End and Side like E.
Tanks and Launders - Galvanized Iron, also Guide Strip nailed along Side Edge of Table.
Slope 1½" : 12"
4'0"
Launder can be moved up to discharge separately.

FIG. 856*b*. — PLAN.

The manner in which the lower belt, connected with the extractor, and the upper belt are connected to the shaft allows the operator to swing the spitzkasten while working to any position. The aluminum cone is used, claims the inventor, because oil will not adhere to it when clean. The oil is raised to the different temperatures by means of steam generated in a small flask (7) by means of a gas lamp (8); the whole attached to the framework. A tube (9) passes from this retort (7) through the upright shaft of the cone and ends within the aluminum cone.

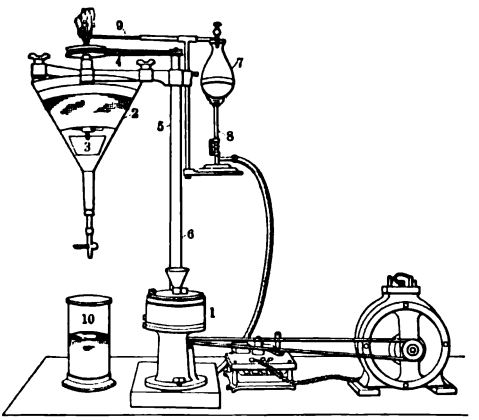

FIG. 857. — VAN METER'S OIL TESTING DEVICE.

Once the temperature of the oil has been raised above 100° F. the weight of the mineral entrapped by the oil tends to pull the oil to the bottom in sinking. This is avoided since centrifugal force holds the mineral in suspension with the oil while the gangue sinks. The gangue can be drawn off into a beaker while the apparatus is running by moving the spitzkasten over a beaker (10). Then by moving the spitzkasten over the centrifugal machine the oil may be here separated from the ore. The apparatus is self-contained. A standard test-oil has been compounded for this machine by J. W. Van Meter, of San Francisco, inventor of the Van Meter system of concentration and separation of minerals and ore by oil. All that is necessary in testing an ore is to find at what temperature the selective action for the mineral takes place. That determined, an oil is compounded which has the selective action at normal

temperature. The Van Meter process is used at the Santa Barbara oil-concentration plant, Yauli, Peru, South America.

The Elmore Ore Concentrating Company has a laboratory testing apparatus suited for determining the suitability of ores for treatment by the vacuum oil process. This is similar to Fig. 816. In § 1353 of Chapter XXXIX will be found suggestions with regard to testing by the Delprat and Potter processes.

§ 1629. TESTING BY HEAVY SOLUTION. — See Ore Dressing, Vol. II., page 1156. In coal-testing plants saturated solutions of calcium chloride and zinc chloride are used. As in most of this work solutions are required with higher specific gravity than has calcium chloride, zinc chloride finds the more extended use. Fig. 858 shows the form of apparatus best adapted for making these tests.[13] The sample of coal having been weighed is then deposited in the small tank *b* and thoroughly stirred in order that every piece may become well covered with the solution and so that pieces of a higher specific gravity may sink. The latter particles pass down through the funnel bottom *n*, settling finally to funnel *c*. Tank *b* is then moved very gently to the position *b*¹ over funnel bottom *o*, the float being carried along with it. The Richards' pump *i* is then started and the clamps *g* removed, allowing the heavy solution to be filtered off into the jar *h*. After washing with water funnels *c* and *c*¹ are removed and weighed.

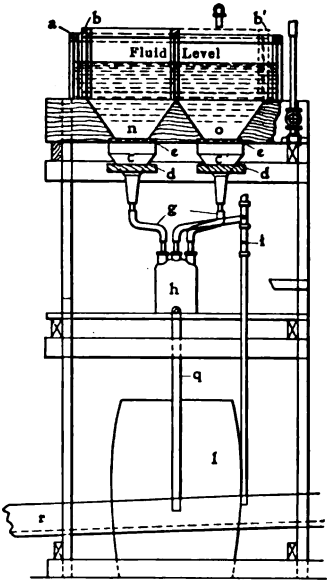

FIG. 858. — LONGITUDINAL SECTION OF DELAMETER COAL-TESTING DEVICE.

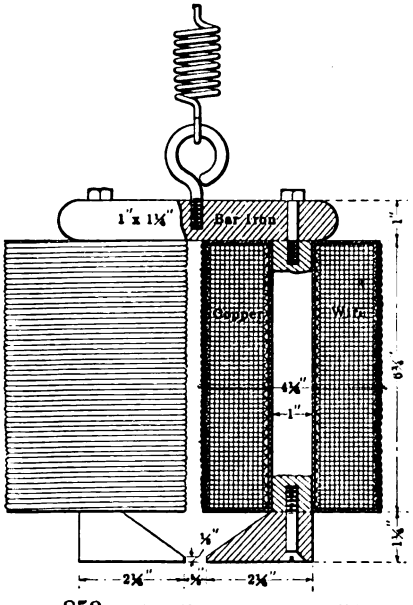

FIG. 859. — DOUBLE-POLE ELECTRO-MAGNET.

§ 1630. MAGNETIC SEPARATORS. — For general testing purposes there is needed a small electromagnet designed for use either as a high or low-power magnet. For large sized tests a two-pole Wetherill magnetic separator is without doubt the best machine. It may be used either as a high or low-power machine, the rheostat affording extremely close adjustment.

Small Testing Magnet. Fig. 859 shows a form of testing magnet that can be recommended for small and preliminary tests. This magnet has two cores of soft iron joined at the top by a yoke of cast iron; the pole shoes, with faces 1 × ⅛ inch, are screwed to the bottoms of the cores, leaving an air-gap ⅝ inch long between the north and south poles. The magnet is suspended by a screw-eye from a spring. Each core is wound with 5,000 feet of cotton-covered No. 21 copper wire making 6,760 coils. The turns are held in place at top and bottom by brass rings and are protected by layers of paper and

tarred marline. The winding is such that a current of 0.8 ampere at a pressure of 50 volts gives the maximum of magnetic lines the core can carry without undue heating. When making a test the material is spread out upon a piece of glass or glazed paper and the magnet brought over it. The magnetic particles that have been attracted to the poles are removed by holding the magnet over a sheet of paper and switching off the current.

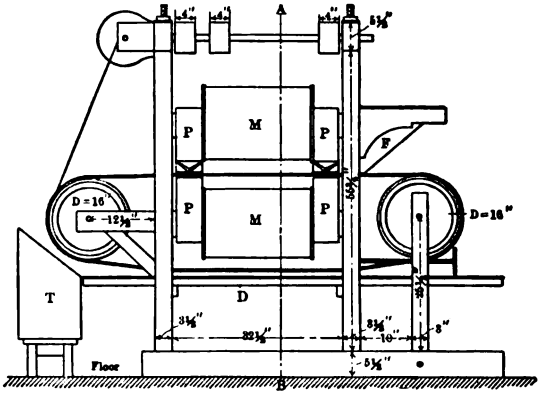

FIG. 860*a*. — LABORATORY WETHERILL SEPARATOR.

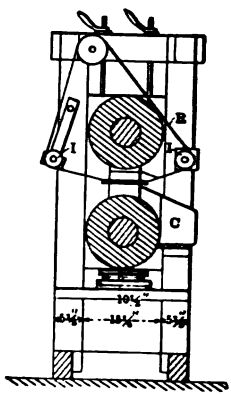

FIG. 860*b*. — CROSS-SECTION.

Wetherill Separator. Figs. 860*a* and *b* show a small Wetherill separator as used in the mining laboratory of the Massachusetts Institute of Technology. As this is very similar to the standard machine described in § 1300 of Vol. III. we need not enter into a complete description of the machine. Each of the magnets is wound for 100,000 ampere turns and the machine is capable of adjustment between 0.01 and 16.32 amperes. Table 634 gives a list of minerals which have been found to be magnetic at the current strength indicated. This list is only suggestive as it needs to be corroborated on many samples of the same mineral species.

TABLE 634. — ACTION OF THE WETHERILL MAGNET ON MINERALS FOUND IN PLACER SANDS TOGETHER WITH THEIR SPECIFIC GRAVITY.

Non-magnetic.		Separated by Current of ½ Ampere or less.		Separated by Current of 2 Amperes.		Separated by Current of 3.5 Amperes.	
Mineral.	Specific Gravity.	Mineral.	Specific Gravity.	Mineral.	Specific Gravity.	Mineral.	Specific Gravity.
Iridium	22						
Iridosmium	19						
Electrum	15.6–19.3						
Gold	15.6–19.3						
Platinum	14 –19	Platinum*		Platinum*		Platinum*	
Amalgam	14						
Mercury	13						
Lead	11						
Cinnabar	8.1						
Galena	7.5						
Wolframite	7.2– 7.5	Cast iron	7.5				
Cassiterite	7	Josephinite	7			Cassiterite (occasionally)	7
Scheelite	6			Hematite	5		
Crocoite	6						
Columbite	5.3–7.3						
Pyrite	5	Magnetite	5.2	Ilmenite	5	Monazite	5
Molybdenite	4.8						

* Probably due to iron.

TABLE 634. — (*Continued*).

Non-magnetic.		Separated by Current of ½ Ampere or less.		Separated by Current of 2 Amperes.		Separated by Current of 3.5 Amperes.	
Mineral.	Specific Gravity.	Mineral.	Specific Gravity.	Mineral.	Specific Gravity.	Mineral.	Specific Gravity.
Zircon	4.7						
Barite	4.3-4.6			Chromite	4.3-4.6	Pyrrhotite	4.5
Corundum	4			Rutile	4.2	Corundum	4
Cyanite	3.6			Limonite	4	Brookite	4
Diamond	3.5			Garnet	3 -4		
Topaz	3.5			Pyroxene	3.2-3.6		
Fluorite	3.25			Epidote	3.5	Spinel	3.5-4
Apatite	3.2			Titanite	3.5		
Spodumene	3.1						
Beryl	2.7			Chrysolite	3.3		
				Tourmaline	3		
				Siderite	3		
				Serpentine	2.5		

§ 1631. ROASTING FOR MAGNETIC SEPARATION. — Occasionally ores or products having in themselves little or no magnetic susceptibility, and which cannot be successfully handled otherwise, require concentration. This may sometimes be accomplished by roasting, with or without carbon, and subsequent treatment on a magnetic separator. Table 635 gives lists of minerals which become quite magnetic on roasting.

TABLE 635. — MINERALS WHICH BECOME QUITE MAGNETIC ON ROASTING.

Sulphides. Oxidizing roast without carbon.	Oxides and carbonates. Reducing roast with carbon.
Pyrite FeS_2	Hematite Fe_2O_3
Marcasite FeS_2	Siderite $FeCO_3$
Chalcopyrite $FeCuS_2$	Wolframite $FeMnWO_4$
Bornite $FeCu_3S_3$	Chromite $FeCu_2O_4$
Arsenopyrite FeAsS	

Sulphides are usually given an oxidizing roast, without the use of carbon, and well exposed to the atmosphere; while oxides and carbonates may be given a reducing roast, with carbon, and little exposed to the atmosphere.

Laboratory roasting tests on sulphide ores may be conducted by weighing out a small amount of the ore — say 1,000 grams — and placing it in an iron pan of comparatively large exposed area. The ore should be in a layer one-half inch or 1 inch deep. Place the pan containing the ore over a fire which can be fairly well regulated; a blacksmith forge is excellent as the heat is easily controlled and the hood serves to remove the sulphur dioxide fumes. Constantly stir the ore while heating it and, when it gets hot enough so that the play of blue flames of burning sulphur is seen all over the surface, examine the ore very carefully to see if there are any "shiners" or unattacked particles of the sulphide left. If so, continue the roast. As soon as no more "shiners" can be seen, cool the material as quickly as possible either by putting a little water on the hot ore itself, only as much as will entirely evaporate, or by setting the pan into another receptacle containing water. Weigh the roasted ore and proceed with the magnetic separation.

The ore must be constantly stirred to prevent caking and also to expose all the sulphide particles, while hot, to the oxygen in the air. This roasting forms a superficial coating of Fe_3O_4 on the particle which renders it magnetic even under very weak magnets. If the roast is carried too far Fe_2O_3 results which is not magnetic, and it is to prevent this that the material must be cooled quickly.

In giving oxides and carbonates a reducing roast with carbon, weigh out from 500 to 1,000 grams of the ore and mix in thoroughly from 3 to 5% by

weight of finely ground carbon or charcoal. Place in a deep crucible or pot with but little surface area and, without stirring, keep at a dull red heat until all of the carbon is consumed. Cool and weigh as in the case of the oxidizing roast. This usually results in a lumpy, cakey product which is rather hard to do anything with and consequently the reducing roast is generally unsatisfactory. If the ore is stirred during the roast an approximate result is obtained without lumps, but this also is unsatisfactory. A satisfactory reducing roast can only be obtained by exposing the ore for a short time to the action of reducing solid or gaseous carbon, at a red heat and with complete stirring and then chilling instantly on cold iron or otherwise.

§ 1632. BOTTLE AMALGAMATION. — In testing the black sands of the Pacific Coast for gold, platinum, and iridosmium the following method has been used very successfully.

A kilogram sample of each product of the concentrating tables is mixed with water in a 2-gallon bottle. To this is added a small quantity of sodium amalgam, and after mechanical agitation by revolving endwise in a mechanical agitator, making 30 revolutions a minute for about thirty minutes, it is found possible to extract practically all the free gold, platinum, and iridosmium. It has been found that the platinum and iridosmium will stick to the sodium amalgam as long as the sodium is not all converted by water into sodium hydroxide. When the sodium amalgam is so converted the platinum separates out. As in some instances the gold has been found to be so coated with martite and other oxides of iron as to defeat amalgamation, each product is also examined by fire assay to determine the total gold and platinum.

This method may be applied to the determination of the precious metal values contained in other low-grade products where the gold, silver, platinum, etc., exist chemically uncombined.

§ 1633. MEASUREMENT OF MINERAL PARTICLES. — The use of the micrometer microscope for measuring the size of grains has been referred to in § 1104. The suggestion has been made that the reflectoscope might be applied for the measurement of mineral grains in the same way that the stereopticon is used for the measurement of screen openings. The author is not aware that any work has thus far been done along this line, but offers this merely as a suggestion of possible value.

The readers' attention is called in general to the discussion under the head of testing to be found in Vol. II., pages 1136 and following.

TESTING FOR A PROCESS.

§ 1634. The question of testing for a process will be found discussed in Vol. II., pages 1161 to 1168.

REGULAR MILL TESTING.

§ 1635. TESTING SIEVES. — In fine jigging, whether the sand has been classified or not, unless the classifier is an extremely good one, the tailings of the jig will always contain fine free mineral which should be in the concentrates.

The tailings from the Wilfley table treating natural product, or mixed feed, or classified product, where the classifier is inefficient, will show fine free mineral in the tailings that ought to be in the concentrates.

The simplest way of detecting this in the mill is to have a little nest of sieves running from the finest size up, doubling the diameter of the hole of each succeeding sieve. From this nest of sieves one can take the one that seems most satisfactory. The sieves should have the sieve cloth soldered to the

bottom of the rim so that it can lie close to the bottom of the vanning shovel. With sieves so constructed one can sift the tailings to be tested with the aid of water by jigging the sieve up and down and quickly obtain the undersize. This undersize is greatly reduced in quantity and, because it contains all the fine free mineral, it is greatly enriched in quality. It will, therefore, give a good demonstration at once upon the vanning shovel of the loss which has taken place at this point.

The middlings of the Wilfley table which is treating the first spigot of the classifier on primary pulp, that is, pulp coming from the undersize of the main series of screens, will always have a large proportion of large free mineral which belongs in the concentrates, and associated with this in that product will be a considerable quantity of finer quartz. These two products can be separated approximately by putting them on one of the coarser sieves of the nest. This sieve can be determined by trial to see which in the nest is most suited to making this undersize. The coarser free mineral in this product can frequently be made to stand out alone, while the undersize because of its being free contains practically the whole of the quartz and only a small quantity of fine free mineral which is present in middlings.

BIBLIOGRAPHY.

1. *Eng. & Min. Jour.*, Vol. LXXVII., (1904), p. 1045. Dwight E. Woodbridge. Ore Dressing at Cananea. Water consumption in Arizona and Northern Mexico.
2. *Ibid.*, Vol. LXXVIII., (1904), pp. 945–48. T. A. Rickard. Milling in the Lake Superior District.
3. *Ibid.*, Vol. LXXIX., (1905), p. 1089. F. H. Probert. Concentration of copper ore.
4. *Ibid.*, Vol. LXXXII., (1906), p. 969. C. W. Goodale. Water consumption in Butte practice.
5. *Ibid.*, p. 1217. G. A. and H. S. Denny. Recent innovations in Rand metallurgical practice.
6. *Ibid.*, Vol. LXXXIII., (1907), p. 803. Edward K. Judd. Detection of willemite in jig tailings by phosphorescence.
7. *Ibid.*, Vol. LXXXV., (1908), p. 803. W. G. Martin. Marketing zinc ores.
8. Fuller, W. P. & Company, San Francisco, California. Catalogue describing the Van Meter aluminated hydrocarbon oil-concentrating process.
9. Goodale, C. W., Butte, Montana. Private communication.
10. Goodwin, E. G., Kansas City, Missouri. Private communication.
11. Hutchinson, W. Spencer, Boston, Massachusetts. Private communication.
12. *Mines & Minerals*, Vol. XXVI., (1905–06), p. 346. A. S. Atkinson. Milling at Lake Superior.
13. *Ibid.*, Vol. XXVIII., (1908), p. 401. G. R. Delamater. Description of government testing plant at Denver, Colorado.
14. *Min. & Sci. Press*, Vol. XCIII., (1906), p. 696. C. W. Goodale. Water consumption in Butte practice.
15. Rickets, L. D., Cananea, Sonora, Mexico. Private communication giving information as to power tests at the concentrator of the Cananea Consolidated Copper Company's mill, Cananea, Sonora, Mexico.

APPENDIX.

Tables and Other Useful Information.

TABLE 636. — STANDARD GAUGES FOR BRASS AND IRON WIRE.

Number.	Iron Wire. Washburn & Moen. Diameter.		Brass Wire. Old English. Diameter.	
	Inch.	Millimeter.	Inch.	Millimeter.
0000000	0.490	12.45	.....	.....
000000	0.460	11.684	.....	.....
00000	0.430	10.922	.....	.....
0000	0.393	9.982	0.454	11.531
000	0.362	9.194	0.425	10.795
00	0.331	8.407	0.380	9.652
0	0.307	7.797	0.340	8.636
1	0.283	7.188	0.300	7.620
2	0.262	6.680	0.284	7.213
3	0.244	6.197	0.259	6.578
4	0.225	5.715	0.238	6.045
5	0.207	5.257	0.220	5.588
6	0.192	4.876	0.203	5.156
7	0.177	4.495	0.180	4.572
8	0.162	4.114	0.165	4.191
9	0.148	3.759	0.148	3.759
10	0.135	3.429	0.134	3.403
11	0.120	3.048	0.120	3.048
12	0.105	2.667	0.109	2.768
13	0.092	2.336	0.095	2.413
14	0.080	2.032	0.083	2.108
15	0.072	1.828	0.072	1.829
16	0.063	1.600	0.065	1.651
17	0.054	1.371	0.058	1.473
18	0.047	1.1938	0.049	1.2446
19	0.041	1.0414	0.040	1.0160
20	0.035	0.8890	0.035	0.8890
21	0.032	0.8128	0.0315	0.8001
22	0.028	0.7112	0.0295	0.7493
23	0.025	0.6350	0.027	0.6853
24	0.023	0.5842	0.025	0.6350
25	0.020	0.5080	0.023	0.5842
26	0.018	0.4572	0.0205	0.5207
27	0.017	0.4318	0.01875	0.4762
28	0.016	0.4064	0.0165	0.4191
29	0.015	0.3810	0.0155	0.3937
30	0.014	0.3556	0.01375	0.3492
31	0.0135	0.3429	0.01225	0.3111
32	0.013	0.3302	0.01125	0.2857
33	0.011	0.2794	0.01025	0.2603
34	0.010	0.2540	0.0095	0.2413
35	0.0095	0.2413	0.009	0.2286
36	0.009	0.2286	0.0075	0.1905
37	0.0085	0.2159	0.0065	0.1651
38	0.008	0.2032	0.00575	0.1460
39	0.0075	0.1905	0.005	0.1270
40	0.007	0.1778	0.0045	0.1143

TABLE 637. — TABLE OF DIAMETERS AND AREAS OF CIRCLES.

Diameter Inches.	Area Square Inch.	Area Square mm.	Diameter Inches.	Area Square Inch.	Area Square mm.
1/64	.0007670	.4948	2 17/64	5.0320	3,246.4
1/32	.00307	1.981	2 9/32	5.1572	3,327.2
3/64	.00690	4.452	2 19/64	5.2836	3,408.8
1/16	.01227	7.916	2 5/16	5.4119	3,491.5
5/64	.01917	12.37	2 21/64	5.5413	3,575.0
3/32	.02761	17.81	2 11/32	5.6727	3,659.8
7/64	.03758	24.25	2 23/64	5.8051	3,745.2
1/8	.04909	31.67	2 3/8	5.9396	3,832.0
9/64	.06213	40.08	2 25/64	6.0751	3,919.4
5/32	.07670	49.48	2 13/32	6.2126	4,008.1
11/64	.09281	59.88	2 27/64	6.3512	4,097.5
3/16	.11045	71.26	2 7/16	6.4918	4,188.2
13/64	.12962	83.63	2 29/64	6.6335	4,279.7
7/32	.15033	96.99	2 15/32	6.7771	4,372.3
15/64	.17257	111.34	2 31/64	6.9219	4,465.7
1/4	.19635	126.68	3	7.0686	4,560.4
17/64	.22166	143.01	3 1/32	7.3662	4,752.4
9/32	.24850	160.32	3 1/16	7.6699	4,948.3
19/64	.27688	178.63	3 3/32	7.9798	5,148.2
5/16	.30680	197.94	3 1/8	8.2958	5,352.1
21/64	.33824	218.22	3 5/32	8.6179	5,559.9
11/32	.37122	239.50	3 3/16	8.9462	5,771.7
23/64	.40574	261.77	3 7/32	9.2806	5,987.5
3/8	.44179	285.03	3 1/4	9.6211	6,207.1
25/64	.47937	309.27	3 9/32	9.9678	6,430.8
13/32	.51849	334.51	3 5/16	10.3210	6,658.7
27/64	.55914	360.73	3 11/32	10.680	6,890.3
7/16	.60132	387.95	3 3/8	11.045	7,125.8
29/64	.64504	416.15	3 13/32	11.416	7,365.1
15/32	.69029	445.35	3 7/16	11.793	7,608.4
31/64	.73708	475.53	3 15/32	12.177	7,856.1
1	.78540	506.71	4	12.566	8,107.1
1 1/32	.83525	538.87	4 1/32	12.962	8,362.6
1 1/16	.88664	572.04	4 1/16	13.364	8,621.9
1 3/32	.93956	606.17	4 3/32	13.772	8,885.1
1 1/8	.99402	641.30	4 1/8	14.186	9,152.2
1 5/32	1.0500	677.42	4 5/32	14.607	9,423.9
1 3/16	1.1075	714.51	4 3/16	15.033	9,698.7
1 7/32	1.1666	752.64	4 7/32	15.466	9,978.0
1 1/4	1.2272	791.74	4 1/4	15.904	10,261.
1 9/32	1.2893	831.80	4 9/32	16.349	10,548.
1 5/16	1.3530	872.90	4 5/16	16.800	10,839.
1 11/32	1.4182	914.97	4 11/32	17.257	11,134.
1 3/8	1.4849	958.90	4 3/8	17.721	11,433.
1 13/32	1.5532	1,002.1	4 13/32	18.190	11,735.
1 7/16	1.6230	1,047.1	4 7/16	18.665	12,042.
1 15/32	1.6943	1,093.1	4 15/32	19.147	12,353.
1 1/2	1.7671	1,140.1	5	19.635	12,668.
1 17/32	1.8415	1,188.1	5 1/32	20.129	12,986.
1 9/16	1.9175	1,237.1	5 1/16	20.629	13,309.
1 19/32	1.9949	1,287.0	5 3/32	21.135	13,635.
1 5/8	2.0739	1,338.0	5 1/8	21.648	13,966.
1 21/32	2.1545	1,390.0	5 5/32	22.166	14,301.
1 11/16	2.2365	1,442.9	5 3/16	22.691	14,639.
1 23/32	2.3202	1,496.9	5 7/32	23.221	14,981.
1 3/4	2.4053	1,551.8	5 1/4	23.758	15,328.
1 25/32	2.4920	1,607.7	5 9/32	24.301	15,678.
1 13/16	2.5802	1,664.6	5 5/16	24.850	16,032.
1 27/32	2.6699	1,722.5	5 11/32	25.406	16,391.
1 7/8	2.7612	1,781.4	5 3/8	25.967	16,753.
1 29/32	2.8540	1,841.3	5 13/32	26.535	17,119.
1 15/16	2.9483	1,902.1	5 7/16	27.109	17,490.
1 31/32	3.0442	1,964.0	5 15/32	27.688	17,863.
2	3.1416	2,026.8	6	28.274	18,241.
2 1/32	3.2404	2,090.6	6 1/4	29.465	19,010.
2 1/16	3.3410	2,155.5	6 1/2	30.680	19,794.
2 3/32	3.4429	2,221.2	6 3/4	31.919	20,593.
2 1/8	3.5466	2,288.1	6 7/8	33.180	21,408.
2 5/32	3.6515	2,355.8	6 7/8	34.472	22,240.
2 3/16	3.7583	2,424.7	6 7/8	35.785	23,087.
2 7/32	3.8662	2,494.3	6 7/8	37.122	23,950.
2 1/4	3.9761	2,565.2	7	38.485	24,830.
2 9/32	4.0871	2,636.8	7 1/4	39.871	25,723.
2 5/16	4.2000	2,709.7	7 1/2	41.282	26,633.
2 11/32	4.3141	2,783.3	7 3/4	42.718	27,560.
2 3/8	4.4301	2,858.1	7 7/8	44.179	28,503.
2 13/32	4.5473	2,933.7	7 7/8	45.664	29,461.
2 7/16	4.6654	3,010.6	7 7/8	47.173	30,434.
2 15/32	4.7866	3,088.1	7 7/8	48.707	31,424.
2 1/2	4.9087	3,166.9	8	50.265	32,429.

TABLE 637. — TABLE OF DIAMETERS AND AREAS OF CIRCLES. — *Continued.*

Diameter Inches.	Area Square Inch.	Area Square mm.	Diameter Inches.	Area Square Inch.	Area Square mm.
8⅛	51.849	33,451.	18⅛	265.18	171,080.
8¼	53.456	34,488.	18¼	268.80	173,420.
8⅜	55.088	35,541.	18⅜	272.45	175,770.
8½	56.745	36,611.	18½	276.12	178,140.
8⅝	58.426	37,694.	18⅝	279.81	180,520.
8¾	60.132	38,795.	19	283.53	182,920.
8⅞	61.862	39,911.	19⅛	287.27	185,340.
9	63.617	41,043.	19¼	291.04	187,770.
9⅛	65.397	42,192.	19⅜	294.83	190,210.
9¼	67.201	43,355.	19½	298.65	192,680.
9⅜	69.029	44,535.	19⅝	302.49	195,150.
9½	70.882	45,730.	19¾	306.35	197,640.
9⅝	72.760	46,942.	19⅞	310.24	200,150.
9¾	74.662	48,169.	20	314.16	202,680.
9⅞	76.589	49,412.	20⅛	318.10	205,230.
10	78.540	50,671.	20¼	322.06	207,780.
10⅛	80.516	51,946.	20⅜	326.05	210,350.
10¼	82.516	53,236.	20½	330.06	212,940.
10⅜	84.541	54,542.	20⅝	334.10	215,550.
10½	86.590	55,864.	20¾	338.16	218,170.
10⅝	88.664	57,202.	20⅞	342.25	220,810.
10¾	90.763	58,557.	21	346.36	223,460.
10⅞	92.886	59,926.	21⅛	350.50	226,130.
11	95.033	61,311.	21¼	354.66	228,810.
11⅛	97.205	62,713.	21⅜	358.84	231,510.
11¼	99.402	64,130.	21½	363.05	234,230.
11⅜	101.62	65,561.	21⅝	367.28	236,950.
11½	103.87	67,013.	21¾	371.54	239,700.
11⅝	106.14	68,477.	21⅞	375.83	242,470.
11¾	108.43	69,955.	22	380.13	245,240.
11⅞	110.75	71,451.	22⅛	384.46	248,040.
12	113.10	72,968.	22¼	388.82	250,850.
12⅛	115.47	74,497.	22⅜	393.20	253,680.
12¼	117.86	76,039.	22½	397.61	256,520.
12⅜	120.28	77,600.	22⅝	402.04	259,380.
12½	122.72	79,174.	22¾	406.49	262,250.
12⅝	125.19	80,768.	22⅞	410.97	265,140.
12¾	127.68	82,374.	23	415.48	268,050.
12⅞	130.19	83,993.	23⅛	420.00	270,970.
13	132.73	85,632.	23¼	424.56	273,910.
13⅛	135.30	87,290.	23⅜	429.13	276,860.
13¼	137.89	88,961.	23½	433.74	279,830.
13⅜	140.50	90,645.	23⅝	438.36	282,810.
13½	143.14	92,348.	23¾	443.01	285,810.
13⅝	145.80	94,064.	23⅞	447.69	288,830.
13¾	148.49	95,800.	24	452.39	291,860.
13⅞	151.20	97,548.	24⅛	461.86	297,970.
14	153.94	99,316.	24¼	471.44	304,150.
14⅛	156.70	101,100.	24½	481.11	310,390.
14¼	159.48	102,890.	25	490.87	316,690.
14⅜	162.30	104,710.	25⅛	500.74	323,060.
14½	165.13	106,540.	25¼	510.71	329,490.
14⅝	167.99	108,380.	25½	520.77	335,980.
14¾	170.87	110,240.	26	530.93	342,530.
14⅞	173.78	112,120.	26⅛	541.19	349,150.
15	176.71	114,010.	26¼	551.55	355,840.
15⅛	179.67	115,920.	26½	562.00	362,580.
15¼	182.65	117,840.	27	572.56	369,390.
15⅜	185.66	119,780.	27⅛	583.21	376,260.
15½	188.69	121,740.	27¼	593.96	383,200.
15⅝	191.75	123,710.	27½	604.81	390,200.
15¾	194.83	125,700.	28	615.75	397,260.
15⅞	197.93	127,700.	28¼	626.80	404,390.
16	201.06	129,720.	28½	637.94	411,570.
16⅛	204.22	131,750.	28¾	649.18	418,820.
16¼	207.39	133,810.	29	660.52	426,140.
16⅜	210.60	135,871.	29¼	671.96	433,520.
16½	213.82	137,950.	29½	683.49	440,960.
16⅝	217.08	140,051.	29¾	695.13	448,470.
16¾	220.35	142,161.	30	706.86	456,040.
16⅞	223.65	144,290.	30½	718.69	463,670.
17	226.98	146,440.	30½	730.62	471,370.
17⅛	230.33	148,600.	30⅞	742.64	479,120.
17¼	233.71	150,780.	31	754.77	486,950.
17⅜	237.10	152,970.	31¼	766.99	494,830.
17½	240.53	155,180.	31½	779.31	502,780.
17⅝	243.98	157,410.	31¾	791.73	510,780.
17¾	247.45	159,640.	32	804.25	518,870.
17⅞	250.95	161,900.	32¼	816.86	527,010.
18	254.47	164,170.	32½	829.58	535,210.
18⅛	258.02	166,460.	32¾	842.39	543,480.
18¼	261.59	168,770.	33	855.30	551,810.

TABLE 637. — TABLE OF DIAMETERS AND AREAS OF CIRCLES. — *Continued.*

Diameter Inches.	Area Square Inch.	Area Square mm.	Diameter Inches.	Area Square Inch.	Area Square mm.
33¼	868.31	560,200.	59½	2,780.5	1,793,900.
33½	881.41	568,650.	60	2,827.4	1,824,100.
33¾	894.62	577,170.	61	2,922.5	1,885,500.
34	907.92	585,750.	62	3,019.1	1,947,800.
34¼	921.32	594,400.	63	3,117.2	2,011,100.
34½	934.82	603,110.	64	3,217.0	2,075,500.
34¾	948.42	611,880.	65	3,318.3	2,140,800.
35	962.11	620,710.	66	3,421.2	2,207,200.
35¼	975.91	629,620.	67	3,525.7	2,274,600.
35½	989.80	638,580.	68	3,631.7	2,343,000.
35¾	1,003.8	647,610.	69	3,739.3	2,412,400.
36	1,017.9	656,710.	70	3,848.5	2,482,900.
36¼	1,032.1	665,870.	71	3,959.2	2,534,300.
36½	1,046.3	675,030.	72	4,071.5	2,626,800.
36¾	1,060.7	684,320.	73	4,185.4	2,700,300.
37	1,075.2	693,680.	74	4,300.8	2,774,700.
37¼	1,089.8	703,100.	75	4,417.9	2,850,300.
37½	1,104.5	712,580.	76	4,536.5	2,926,800.
37¾	1,119.2	722,060.	77	4,656.6	3,004,300.
38	1,134.1	731,680.	78	4,778.4	3,082,800.
38¼	1,149.1	741,350.	79	4,901.7	3,162,400.
38½	1,164.2	751,100.	80	5,026.5	3,242,900.
38¾	1,179.3	760,840.	81	5,153.0	3,324,500.
39	1,194.6	770,710.	82	5,281.0	3,407,100.
39¼	1,210.0	780,640.	83	5,410.6	3,480,700.
39½	1,225.4	790,580.	84	5,541.8	3,575,300.
39¾	1,241.0	800,640.	85	5,674.5	3,661,000.
40	1,256.6	810,710.	86	5,808.8	3,747,600.
40¼	1,272.4	820,900.	87	5,944.7	3,835,300.
40½	1,288.2	831,100.	88	6,082.1	3,923,900.
40¾	1,304.2	841,420.	89	6,221.1	4,013,600.
41	1,320.3	851,800.	90	6,361.7	4,104,300.
41¼	1,336.4	862,190.	91	6,503.9	4,196,100.
41½	1,352.7	872,710.	92	6,647.6	4,288,800.
41¾	1,369.0	883,220.	93	6,792.9	4,382,500.
42	1,385.4	893,800.	94	6,939.8	4,477,300.
42¼	1,402.0	904,510.	95	7,088.2	4,573,000.
42½	1,418.6	915,220.	96	7,238.2	4,669,800.
42¾	1,435.4	926,060.	97	7,389.8	4,767,600.
43	1,452.2	936,900.	98	7,543.0	4,866,400.
43¼	1,469.1	947,800.	99	7,697.7	4,966,200.
43½	1,486.2	958,840.	100	7,854.0	5,067,100.
43¾	1,503.3	969,870.	101	8,011.9	5,169,000.
44	1,520.5	980,970.	102	8,171.3	5,271,800.
44¼	1,537.9	992,190.	103	8,332.3	5,375,700.
44½	1,555.3	1,003,400.	104	8,494.9	5,480,600.
44¾	1,572.8	1,014,700.	105	8,659.0	5,586,400.
45	1,590.4	1,026,100.	106	8,824.7	5,693,300.
45¼	1,608.2	1,037,500.	107	8,992.0	5,801,300.
45½	1,626.0	1,049,000.	108	9,160.9	5,910,200.
45¾	1,643.9	1,060,600.	109	9,331.3	6,020,200.
46	1,661.9	1,072,200.	110	9,503.3	6,131,100.
46¼	1,680.0	1,083,900.	111	9,676.9	6,243,100.
46½	1,698.2	1,095,600.	112	9,852.0	6,356,100.
46¾	1,716.5	1,107,400.	113	10,029.	6,470,300.
47	1,734.9	1,119,300.	114	10,207.	6,585,100.
47¼	1,753.5	1,131,300.	115	10,387.	6,701,300.
47½	1,772.1	1,143,300.	116	10,568.	6,818,100.
47¾	1,790.8	1,155,400.	117	10,751.	6,936,100.
48	1,809.6	1,167,500.	118	10,936.	7,055,500.
48½	1,847.5	1,191,900.	119	11,122.	7,175,500.
49	1,885.7	1,216,600.	120	11,310.	7,296,800.
49½	1,924.4	1,241,500.	122	11,690.	7,541,900.
50	1,963.5	1,266,800.	124	12,076.	7,791,000.
50½	2,003.0	1,292,300.	126	12,469.	8,044,500.
51	2,042.8	1,317,900.	128	12,868.	8,301,900.
51½	2,083.1	1,343,900.	130	13,273.	8,563,200.
52	2,123.7	1,370,100.	132	13,685.	8,829,000.
52½	2,164.8	1,396,600.	134	14,103.	9,098,700.
53	2,206.2	1,423,400.	136	14,527.	9,372,200.
53½	2,248.0	1,450,300.	138	14,957.	9,649,700.
54	2,290.2	1,477,500.	140	15,394.	9,931,600.
54½	2,338.8	1,505,000.	142	15,837.	10,217,000.
55	2,375.8	1,532,800.	144	16,286.	10,507,000.
55½	2,419.2	1,560,800.	146	16,742.	10,801,000.
56	2,463.0	1,589,000.	148	17,203.	11,099,000.
56½	2,507.2	1,617,500.	150	17,671.	11,401,000.
57	2,551.8	1,646,300.	152	18,146.	11,707,000.
57½	2,596.7	1,675,300.	154	18,627.	12,017,900.
58	2,642.1	1,704,600.	156	19,113.	12,331,000.
58½	2,687.8	1,734,100.	158	19,607.	12,650,000.
59	2,734.0	1,763,900.	160	20,106.	12,972,000.

TABLE 637. — TABLE OF DIAMETERS AND AREAS OF CIRCLES. — *Continued.*

Diameter Inches.	Area Square Inch.	Area Square mm.	Diameter Inches.	Area Square Inch.	Area Square mm.
162	20,612.	13,298,000.	202	32,047.	20,675,000.
164	21,124.	13,628,000.	204	32,685.	21,087,000.
166	21,642.	13,963,000.	206	33,329.	21,503,000.
168	22,167.	14,301,000.	208	33,979.	21,922,000.
170	22,698.	14,644,000.	210	34,636.	22,346,000.
172	23,235.	14,990,000.	212	35,299.	22,774,000.
174	23,779.	15,341,000.	214	35,968.	23,205,000.
176	24,328.	15,695,000.	216	36,644.	23,641,000.
178	24,885.	16,055,000.	218	37,325.	24,081,000.
180	25,447.	16,417,000.	220	38,013.	24,524,000.
182	26,016.	16,784,000.	222	38,708.	24,973,000.
184	26,590.	17,155,000.	224	39,408.	25,424,000.
186	27,172.	17,530,300.	226	40,115.	25,881,000.
188	27,759.	17,909,000.	228	40,828.	26,341,000.
190	28,353.	18,292,000.	230	41,548.	26,805,000.
192	28,953.	18,679,000.	232	42,273.	27,273,000.
194	29,559.	19,070,000.	234	43,005.	27,745,000.
196	30,172.	19,466,000.	236	43,744.	28,222,000.
198	30,791.	19,865,000.	238	44,488.	28,702,000.
200	31,416.	20,268,000.	240	45,239.	29,186,000.

TABLE 638. — QUARTZ DIAMETERS AND VELOCITIES FOR COMPUTING SPIGOTS, SORTING COLUMNS, POCKETS, CONES, AND TANKS.

Diameters.		Average Diameter mm.	Velocities.		
Through Screen mm.	On Screen mm.		Average mm. Sec.	Maximum mm. Sec.	Minimum mm. Sec.
12 85	11.01	11.93	393.	489.	271.
.....	.....	11.80	391.	.....	.....
.....	.....	11.60	387.	.....	.....
.....	.....	11.40	383.	.....	.....
.....	.....	11.20	379.	.....	.....
.....	.....	11.00	375.	.....	.....
.....	.....	10.80	371.	.....	.....
.....	.....	10.60	368.	.....	.....
.....	.....	10.40	364.	.....	.....
11.01	9.51	10.26	361.	489.	252.*
.....	.....	10.20	360.	.....	.....
.....	.....	10.00	358.	.....	.....
.....	.....	9.80	355.	.....	.....
.....	.....	9.60	352.	.....	.....
.....	.....	9.40	350.	.....	.....
.....	.....	9.20	347.	.....	.....
.....	.....	9.00	345.	.....	.....
.....	.....	8.80	342.	.....	.....
9.51	7.79	8.65	340.	489.	231.*
.....	.....	8.60	339.	.....	.....
.....	.....	8.40	333.	.....	.....
.....	.....	8.20	329.	.....	.....
.....	.....	8.00	321.	.....	.....
.....	.....	7.80	316.	.....	.....
.....	.....	7.60	311.	.....	.....
.....	.....	7.40	305.	.....	.....
7.79	6.85	7.32	303.	489.	227.
.....	.....	7.20	301.	.....	.....
.....	.....	7.00	298.	.....	.....
.....	.....	6.80	295.	.....	.....
.....	.....	6.60	292.	.....	.....
6.85	5 97	6.41	289.	416.	185.
.....	.....	6.20	283.	.....	.....
.....	.....	6.00	277.	.....	.....
.....	.....	5.80	270.	.....	.....
.....	.....	5.60	264.	.....	.....
5.97	4.95	5.46	260.	362.	172.
.....	.....	5.40	259.	.....	.....
.....	.....	5.20	254.	.....	.....
.....	.....	5.00	250.	.....	.....
.....	.....	4.90	247.	.....	.....
.....	.....	4.80	245.	.....	.....
.....	.....	4.70	243.	.....	.....
.....	.....	4.60	240.	.....	.....
4.95	4.21	4.58	240.	345.	153.
.....	.....	4.50	237.	.....	.....
.....	.....	4.40	233.	.....	.....

* These figures were observed all through the table. See § 1162. The others are interpolated.

TABLE 638. — QUARTZ DIAMETERS AND VELOCITIES FOR COMPUTING SPIGOTS, SORTING COLUMNS, POCKETS, CONES, AND TANKS. — *Continued.*

Diameters.		Average Diameter mm.	Velocities.		
Through Screen mm.	On Screen mm.		Average mm. Sec.	Maximum mm. Sec.	Minimum mm. Sec.
		4.30	230.		
		4.20	226.		
4.21	4.12	4.17	225	345.	154.
		4.10	223.		
		4.00	221.		
3.48		3.90	219.		
		3.80	216.		
		3.70	214.		
		3.60	212.		
		3.50	209.		
4.12	2.83	3.48	209.	307.	154.
		3.40	207.		
		3.30	204.		
		3.20	201.		
		3.10	198.		
		3.00	196.		
		2.90	193.		
2.83	2.82	2.83	191.	256.	127.
		2.80	189.		
		2.70	183.		
		2.60	177.		
		2.50	172.		
2.82	2.05	2.44	168.	252.	119.
		2.40	167.		
		2.30	166.		
2.49	2.06	2.28	166.	238.	89.
		2.20	162.		
		2.10	158.		
		2.00	153.		
		1.90	148.		
2.06	1.63	1.85	146.	227.	71.
		1.80	142.		
		1.70	134.		
1.63	1.46	1.60	126.	192.	68.
		1.55	124.		
		1.50	122.		
		1.45	121.		
		1.40	119.		
1.46	1.27	1.37	118.	173.	82.
		1.35	116.		
		1.30	113.		
		1.25	109.		
		1.20	106.		
1.27	1.10	1.19	105.	156.	69.
		1.15	102.		
		1.10	98.		
		1.05	95.		
1.10	.97	1.04	94.	147.	64.
		1.00	91.		
		.98	89.		
		.96	88.		
		.94	86.		
		.92	85.		
.97	.84	.91	84.	119.	43.
		.90	84.		
		.88	83.		
		.86	82.		
		.84	81.		
		.82	80.		
		.80	79.		
		.78	78.		
.84	.68	.76	77.	114.	40.
		.74	75.		
		.72	74.		
		.70	72.		
		.68	71.		
		.66	69.		
		.64	68.		
.68	.57	.63	67.	89.	36.
		.62	66.		
		.60	64.		
		.59	62.		
		.58	61.		
		.57	60.		
		.56	59.		
		.55	58.		
		.54	56.		
		.53	55.		

TABLE 638. — QUARTZ DIAMETERS AND VELOCITIES FOR COMPUTING SPIGOTS, SORTING COLUMNS, POCKETS, CONES, AND TANKS. — *Continued.*

Diameters.		Average Diameter mm.	Quartz Velocities.		
Through Screen mm.	On Screen mm.		Average mm. Sec.	Maximum mm. Sec.	Minimum mm. Sec.
		.52	54.		
.57	.45	.51	53.	78.	32.
		.50	52.		
		.49	51.		
		.48	49.		
		.47	48.		
		.46	47.		
		.45	46.		
		.44	45.		
		.43	44.*		
		.42	43.*		
.45	.36	.41	42.*	61.	27.
		.40	41.*		
		.39	41.*		
Microscope		.38	40.*		
Max.	Min.				
.509	.243	.369	39.0*		
		.360	38.4*		
		.350	37.7*		
		.341	37.1*		
		.332	36.4*		
		.323	35.8		
		.314	35.1		
.413	.163	.305	34.48		
		.297	33.7		
		.288	33.0		
		.279	32.3		
		.270	31.5		
		.261	30.8		
		.252	30.0		
		.243	29.3		
.339	.114	.234	28.57		
		.222	27.2		
		.211	25.8		
.321	.130	.199	24.39		
		.194	23.		
		.190	22.		
		.186	21.		
.298	.103	.182	20.41		
		.177	20.		
		.173	19.		
		.169	19.		
		.164	18.		
		.160	18.		
.254	.0827	.156	17.24		
		.151	17.		
		.147	16.		
		.143	16.		
		.139	15.		
.252	.0655	.135	14.49		
		.130	14.		
.249	.0803	.126	12.05		
		.125	11.		
.237	.0679	.121	10.20		
		.119	10.		
		.118	9.		
.219	.0655	.116	8.55		
		.114	8.		
.235	.0569	.112	7.14		
		.108	6.916		
		.104	6.692		
		.099	6.468		
		.095	6.244		
.168	.0608	.0912	6.02		
		.0890	5.697		
		.0868	5.374		
.158	.0429	.0846	5.05		
.147	.0414	.0800	4.26		
		.0773	3.902		
.120	.0364	.0747	3.57		
		.0718	3.285		
.0972	.0387	.0689	3.00		
		.0659	2.76		
.0970	.0315	.0629	2.52		
		.0592	2.32		
.0918	.0317	.0555	2.12		
.0842	.0200	.0503	1.78		

* These figures are slightly modified from the observed figures to bring them into series.

TABLE 638. — QUARTZ DIAMETERS AND VELOCITIES FOR COMPUTING SPIGOTS, SORTING COLUMNS, POCKETS, CONES, AND TANKS. — *Continued.*

Diameters by Microscope.		Average Diameter mm.	Quartz Velocity.		
Maximum mm.	Minimum mm.		Average mm. Sec.	Maximum mm. Sec.	Minimum mm. Sec.
.0718	.0164	.0478	1.50		
		.0451	1.375		
.0715	.0138	.0425	1.26		
		.0401	1.16		
.0660	.0109	.0377	1.06		
		.0360	0.968		
.0629	.0109	.0344	0.887		
.0611	.00806	.0319	0.746		
		.0300	0.687		
		.0282	0.627		
.0539	.00962	.0282	.627		
.0543	.00780	.0267	.526		
.0462	.00868	.0253	.442		
		.0242	.404		
.0462	.00666	.0232	.372		
		.0220	.340		
.0394	.00419	.0209	.313		
		.0203	.3004		
		.0198	.2876		
		.0193	.2748		
.0408	.00326	.0188	.262		
		.0185	.241		
.0323		.0182	.220		
		.0177	.2118		
		.0173	.2051		
		.0169	.1984		
		.0165	.1917		
.0301		.0161	.185		
		.0156	.1754		
		.0150	.1657		
.0412		.0144	.156		
		.0138	.1478		
		.0134	.1422		
		.0130	.1366		
.0403		.0126	.131		
		.0116	.12575		
		.0107	.12050		
		.00978	.11525		
.0318		.00884	.1100		
		.00811	.1056		
		.00737	.1012		
		.00663	.0968		
.0264		.00589	.0924		

TABLE 639. — PERCENT OF VOIDS IN CRUSHED LIMESTONE.

Screen Opening. Inches.	Percent of Voids.	
	By Water Displacement.	From Specific Gravity.
¾	40.9	46.8
¾	39.6	46.1
½	42.2	47.1
½	43.0	45.6
¼	45.7	44.7
1¼ to ¾	47.9	46.2
2 to ½	46.6	46.6
2 to ¾	44.3	42.9
2½ to ¾	46.2	43.4
2½ to 1¼	46.1	45.1
3 to 2	47.5	46.1
3 to 2		

TABLE 640. — EFFECT OF DISTANCE HAULED UPON SETTLEMENT IN WAGON.

Test No.	Size of Stone. Inch.	Method of Loading.	Percent of Settlement for Hauls of — Feet.								
			100	200	300	400	500	600	700	2,640	5,280
3	¾ Scr.	15 ft. drop	7.3	8.3	8.9	9.2	9.5	10.1	10.1	11.2	11.20
4	"	" "	5.0	9.7	10.2	10.2	10.4	10.4	10.7	12.4	.....
6	2 to ¾	" "	2.6	3.7	4.9	5.3	5.3	5.3	5.4	5.4	5.4
7	"	" "	5.3	6.2	7.1	7.7	7.9	8.0	8.3	9.2	.....
9	"	Shoveled	3.5	4.1	4.8	5.3	5.3	5.7	6.5	7.3	.....
11	3 to 2	15 ft. drop	0.57	2.6	2.8	4.1	4.25	4.25	4.25	4.9	4.9
12	"	" "	3.5	4.2	4.5	4.8	5.0	5.1	5.1	6.0	6.0
14	.....	Shoveled	5.0	5.7	6.53	6.53	6.7	6.7	6.7	7.1	7.1

Further reference tables will be found in the Appendix of Volume II.

GENERAL BIBLIOGRAPHY OF ORE-DRESSING LITERATURE.

Bibliography for Preliminary Crushing.

Can. Min. Rev., Vol. XXIV., (1905), p. 80. Trade write up. Illustrated description of jaw and gyratory crushers made by Hadfield Steel Foundry Company, Sheffield, Eng.

Coll. Guard., Vol. LXXX., (1900), p. 288. M. H. Lenicque. Exhibition at Paris Exposition; description of breakers, rolls, screens, classifiers, jigs, and slime tables.

Ibid., Vol. LXXXIX., (1905), p. 737. Trade write up. Description of different types of crushing machinery made by Hadfield Steel Foundry Company, Sheffield, Eng. Describes jaw and spindle crushers and rolls.

Comptes-Rendus Soc. Ind. Min., Feb., 1906, p. 52. M. Butery. Description of the Galland breaker for coal. This is a combination of jaw breaker and toothed rolls.

Eng. & Min. Jour., Vol. LXV., (1898), p. 134. Editorial. Short description of the Sturtevant roll jaw breaker.

Ibid., Vol. LXVII., (1899), p. 83. No author. The Union Iron Works advocates putting a small breaker between the feeder and stamp battery.

Ibid., Vol. LXVIII., (1899), p. 671. No author. Article on Comet breaker.

Ibid., Vol. LXIX., (1900), p. 143. No author. Description of Aultman jaw breaker.

Ibid., p. 561. No author. Governeur rotary rock breaker for talc.

Ibid., Vol. LXX., (1900), p. 733. No author. Description of Austin breaker of the Gates type.

Ibid., Vol. LXXII., (1902), p. 420. No author. Description of the Perfection ore breaker for laboratory use. A combination of jaw and roll breaker. Able to crush to 100 mesh. Adjustable.

Ibid., Vol. LXXV., (1903), p. 712. No author. An article describing the Heclon breaker designed by R. H. Hadfield and A. G. M. Jack.

Ibid., Vol. LXXX., (1905), p. 348. M. M. Green. Requirements for a first-class coke crusher for an electric furnace plant.

Ibid., Vol. LXXXIV., (1907), p. 589. No author. A short article showing long life in crushing machinery.

Field. Mag., Vol. III., (1901), p. 559. Description of the Halk multiple action ore breaker.

Inst. Min. & Met., Vol. XVI., (1907), p. 195. G. E. Brown. Describes a breaking piece for jaw rock breakers.

Iron Age, Vol. LXII., (Nov. 10, 1898), p. 4. No author. Short description of the Preston stone breaker.

Ibid., Vol. LXV., (March 1, 1900), p. 15. No author. Description of the Aultman jaw breaker.

Ibid., Vol. LXV., (May 10, 1900), p. 8. No author. Description of the Governeur rotary rock breaker.

Iron Trade Rev., Vol. XXXII., No. 49., (1899), p. 14. No author. Article on the Comet breaker.

Ibid., Vol. XXXVI., No. 20, (1903), p. 51. Description of an ore breaker made by Wm. R. Martin Iron Works, Lancaster, Penn.

Ibid., Vol. XXXIX., No. 4, (1906), p. 25. R. C. Newhouse. Article on crushing of Lake Superior iron ores.

Mines & Minerals, Vol. XVIII., (1898), p. 303. No author. Short article on the Sturtevant roll jaw breaker.

Ibid., Vol. XX., (1900), p. 380. No author. Description of the Aultman jaw breaker.

Min. Jour., Vol. LXXXI., (1907), p. 285. No author. Description of Bigelow patent breaker.

Min. Mag., Vol. XI., (1905), p. 50. L. H. Sturtevant. General description of gradual reduction, with a trade write up of Sturtevant roll jaw breaker, balanced rolls, and centrifugal finishing rolls.

Min. Reporter, Vol. LIV., (1906), p. 370. No author. Description of the Hathaway gyratory breaker.
Ibid., Vol. LV., (1907), p. 12. No author. Article on chrome steel for jaw plates.
Ibid., p. 114. G. E. Brown. Description of a breaking piece for jaw breakers.
Min. & Sci. Press, Vol. LXXXVI., (1903), p. 24. No author. Description of the Wallace steel breaker.
Ibid., p. 201. No author. An article on the Krom rolling-toggle breaker.
Min. World, Vol. XXVII., (1907), p. 30. No author. Trade write up of McCully breaker.
Ibid., p. 360. Trade write up on a new gyratory rock breaker.
Oest. Zeit., Vol. LIII., (1905), p. 94. Gustav Kroupa. Description of a new coke breaker.
Thon-Ind. Zeit., Vol. XXIII., (1899), p. 681. Karl Weishan. Stone breaker.
Ibid., p. 805. No author. Description of a clay breaker.
Ibid., Vol. XXIV., (1900), p. 883. F. Hauenschild. Description of the Moustier centripetal breaker.
Ibid., p. 1326. F. Hauenschild. Description of the Moustier centripetal breaker, an impact breaker.
Ibid., Vol. XXIX., (1905), p. 1636. No author. Illustrated description of the Konus rock breaker made by C. F. Speyerer, Berlin, Germany.
Zeit. Berg-Hütt-u. Salinen-wesen., Vol. LIII., (1905), p. 125. No author. Description of the Humboldt suspended-spindle gyratory breaker.
Zeit. Ver. Deut. Ing., Vol. LI., (1907), p. 536. Theobold Demuth. Description of jaw breakers, rolls and ball mills at the Reichenberg Exposition in 1906.

BIBLIOGRAPHY FOR ROLLS.

Am. Mfr., Vol. LXV., (1899), p. 448. Trade write up. Description of corrugated rolls.
Can. Min. Rev., Vol. XXIV., (1905), p. 80. Trade write up. Illustrated description of rolls with inserted teeth made by Hadfield Steel Foundry Company, Sheffield, Eng.
Coll. Guard., Vol. LXXXIX., (1905), p. 737. Trade write up, describing different types of crushing machinery made by Hadfield Steel Foundry Company, Sheffield, Eng. Rolls of spiked surface type shown.
Eng. & Min. Jour., Vol. LXIX., (1900), p. 111. No author. Description of Sturtevant rolls.
Ibid., Vol. LXXV., (1903), p. 339. Trade write up, describing the Fritsch crushing rolls.
Ibid., Vol. LXXVI., (1903), p. 624. No author. Description of the R. K. Humphrey new ore crushing rolls.
Ibid., Vol. LXXIX., (1905), p. 77. R. K. Humphrey. General consideration of roll crushing.
Ibid., p. 657. Lewis Searing. Rolls without springs.
Inst. Min. & Met., Vol. X., (1902), p. 234. Philip Argall. Paper entitled, "Sampling and dry crushing in Colorado." Very complete discussion of roll crushing.
Ibid., Vol. XIV., (1905), p. 63. W. Simpkin and J. B. Ballatine. Dry crushing of ores by the Edison process.
Ibid., p. 74. W. Fisher Wilkinson. Results of experiments in crushing ores from the mines of the Simmer and Jack, and from the Robinson Deep, by Edison rolls.
Iron Age, Vol. LXV., (1900), p. 28. No author. Description of Edison 3-high rolls.
Metallurgie., Vol. IV., (1907), p. 277. C. Brömeke. An article on coarse and fine rolls.
Min. Jour., Vol. LXXX., (1906), p. 593. Trade write up. Description of six sets of rolls without springs installed by the Hadfield Steel Foundry Company at the Caucasas Copper Company's mill.
Min. Mag., Vol. XI., (1905), p. 500. L. H. Sturtevant. General discussion of gradual reduction, with a trade write up of Sturtevant roll jaw breaker, balanced rolls, and centrifugal finishing rolls.
Mines & Minerals, Vol. XIX., (1898), p. 160. Catalogue description of Fraser and Chalmer's standard rolls.
Ibid., Vol. XX., (1900), p. 328. Trade write up of Sturtevant centrifugal rolls.
Min. & Sci. Press, Vol. LXXXVI., (1903), p. 262. Trade write up of Krom cushioned rolls.
Oest. Zeit., Vol. LIII., (1905), p. 202. No author. Brief description of Edison's process of preparing iron ore, with brief description of rolls, drying oven, screens, etc.
Thon-Ind. Zeit., Vol. XXIII., (1899), p. 1059. No author. A short general article on rolls.
Ibid., pp. 1099, 1162, 1363. E. Rüsager. Capacity and power of rolls, tube mills, and dry separators for cement.
Ibid., Vol. XXIV., (1900), p. 167. Sieman and Halske rolls.
Ibid., p. 354. G. Hornemann. Comparison of rolls and Chili mills for clay.
Ibid., p. 1367. C. Comper. An article on rolls.
Ibid., p. 1590. Editorial comparing rolls and Chili mill for clay grinding.
Ibid., Vol. XXIX., (1905), p. 132. Question and answer as to machine best suited for crushing calcareous tuff. Answer states that rolls are best suited for this work.

Ibid., p. 1616. No author. Article containing description of rolls used in manufacture of brick.
Ibid., p. 1862. On page 1865 of this article is a description of a pair of smooth rolls manufactured by the Nienburger Eisengieserei und Maschinenfabrick.
Ibid., Vol. XXXI., (1907), pp. 1413, 1544. M. Villard and L. Reiter. Description of apparatus for cleaning rolls.
Zeit. Berg-Hütt-u. Salinen-wesen, Vol. XLVIII., (1900), p. 141. No author. Article on chrome steel for roll shells.
Ibid., Vol. XLIX., (1901), p. 332. No author. Describes experiments with chilled steel roll shells.

BIBLIOGRAPHY FOR STEAM STAMPS.

Coll. Eng., Vol. XX., (1899), p. 128. W. W. Elliot. Work of the Wood steam stamp at Cherry, Arizona.
Engineering, Vol. LXXXVII., (1899), p. 40. A short description of the Wood steam stamp.
Eng. & Min. Jour., Vol. LXVII., (1899), p. 237. No author. Improvements in steam stamp built by Allis-Chalmers Co. for the Tamarack mill in Michigan.
Ibid., Vol. LXVIII., (1899), p. 491. No author. Article on the Wood steam stamp.
Ibid., Vol. LXIX, (1900), p. 383. No author. Article on the Wood steam stamp in Mexico.
Ibid., Vol. LXX., (1900), p. 701. No author. The American steam stamp.
Ibid., Vol. LXXIII., (1902), p. 488. No author. Description of the Parnell-Krause stamp mill mortar.
Ibid., Vol. LXXXIV., (1907), p. 349. No author. A good article comparing the Nordberg compound steam stamp with the simple steam stamp.
Field. Mag., Vol. III., (1900), p. 559. Philip R. Bjorling. The Tremain steam stamp.
Ibid., Vol. V., (1901), p. 167. Trade write up. On a prospecting steam stamp mill.
Min. & Sci. Press, Vol. LXXVIII., (1899), p. 232. C. H. Fitch. History of steam stamps.
Ibid., Vol. XCIII., (1906), p. 319. Louis Fogle and Reginald Leonard. A laboratory steam stamp.

BIBLIOGRAPHY FOR GRAVITY STAMPS.

Can. Min. Inst., Vol. II., (1899), p. 54. B. McDonald. The author describes a method of introducing water into mortars.
Ibid., p. 149. Courtenay DeKalb. Adjustments of the stamp mill.
Can. Min. Rev., Vol. XVIII., (1899), pp. 36, 71. B. McDonald. Method of introducing feed water into mortars.
Ibid., p. 114. Courtenay DeKalb. Adjustments in the stamp mill.
Chem. Met. & Min. Soc. of So. Africa, Vol. VI., (1906), p. 215. W. Beaver. Notes on stamp mills. Experiments with 1050 pound stamps, regards capacity, size of feed for best working, etc.
Ibid., Vol. VII., (1907), p. 269. Q. C. McMillan. Suggestion for removal of broken stamp stems.
Ibid., Vol. VIII., (1907), p. 1. John Gates. Heavy stamps at the Simmer Deep, Ltd., South Africa.
Colo. Sch. Mines, Vol. IV., (1907), p. 7. F. A. Thompson. A little-stamp battery frame.
Electro. & Met. Ind., Vol. V., (1907), p. 14. Geo. P. Scholl. Abstracted from *Min. & Sci. Press*, Vol. XCIV., (1907), p. 211. An article on concrete foundations for stamp mills.
Engineering, Vol. LXXIV., (1902), p. 145. Description of Morison's open front mortar box.
Eng. Mag., Vol. XXXIV., (1907), p. 29. C. C. Christensen. Improvements in stamp mills. The modern stamp.
Eng. & Min. Jour., Vol. LXVII., (1898), p. 351. Canda stamp mill cam.
Ibid., p. 531. E. M. Pritchett, Jr., and H. M. Stanley. Description of a wooden stamp mill.
Ibid., Vol. LXVIII., (1899), p. 763. Life of shoes and dies.
Ibid., Vol. LXIX., (1900), p. 263. Description of a portable prospecting gravity stamp.
Ibid., p. 529. A. W. Warwick. Water economy in stamp milling.
Ibid., Vol. LXXII., (1901), p. 225. W. C. Potter. An article on water economy in stamp mills.
Ibid., p. 759. An article comparing Krupp ball mills and stamps.
Ibid., Vol. LXXV., (1903), p. 514. Geo. S. Binckley. Foundations for stamp batteries.
Ibid., Vol. LXXVI., (1903), p. 622. An abstract from the Journal of the Witerwatersrand Mechanical Engineering Association of an article on high speed stamping.
Ibid., Vol. LXXIX., (1905), p. 203. Illustrated write up of Nissen stamp, touching on weight, capacity, power, advantages, etc.
Ibid., Vol. LXXX., (1905), p. 648. Illustrated article on the Nissen stamp.

Ibid., p. 1063. Description of the Bremner mortar box for stamp mills, a device to hasten passage of pulp through the screen.
Ibid., Vol. LXXXI., (1906), p. 763. Editorial comparing Boston Con. Mining Co. mill and the mill of the Utah Copper Co., regards stamps and rolls as crushers.
Ibid., Vol. LXXXII., (1906), p. 194. H. G. Granger. Description of wooden-stamp mill in Columbia, South America.
Ibid., p. 886. A. D. Foote. An article on masonry foundations for stamp mills.
Genie Civil, Vol. L., (1907), p. 232. Design and working of gold milling equipment with special reference to the Witerwatersrand.
Inst. Civ. Eng., Vol. CLXVI., (1906), p. 243. G. A. Denny. Design and working of gold milling equipment with special reference to the Witerwatersrand.
Inst. Min. & Met., Vol. VIII., (1900), p. 156. D. B. Morison and D. A. Bremner. An article entitled "Development in gravity stamp mills," with special reference to Morison's high speed stamps.
Ibid., Vol. IX., (1901), p. 310. C. G. W. Lock. Discussion of battery construction.
Ibid., p. 310. Robert Canning. Description of iron guides for stems in stamp battery.
Los Angeles Min. Rev., (Sept. 30, 1905). P. S. Pheby. Experiences with a second-hand stamp mill. Illustrates the folly of installing second-hand machinery.
Min. Ind., Vol. VII., p. 383. Edward D. Chester. Statement for reason of coarse stamping in South Africa.
Min. Mag., Vol. XII., (1905), p. 279. J. A. Wauchope. The author finds capacity of 640-pound stamp crushing from 1½ inch through 40-mesh is three tons in 24 hours per stamp, while the capacity crushing to ¼ inch is increased to ten tons.
Ibid., p. 412. T. Wilms. Abstract of paper read before the S. African Society of Engineers, on electric driving of stamp batteries.
Ibid., p. 454. Trade write up. Comparison between a standard ten stamp battery and a Merrall stamp mill.
Min. Rep., XLVII., (1903), p. 221. Crushing to ¼-inch in size as preparation for gravity stamps is advocated.
Ibid., Vol. LII., (1905), p. 184. H. J. S. Heather. The author advocates electrical driving of stamp batteries, and recommends slow speed motor making 250 revolutions per minute, 25 cycles and a 30 horse-power motor for every ten stamps.
Ibid., Vol. LIII., (1906), p. 247. Description of Richards Rapid Economy stamp mill.
Ibid., p. 287. Heavy stamp mills on the Rand.
Mines & Minerals, Vol. XX., (1899), p. 181. R. W. Barrell. Description of a battery frame.
Ibid., Vol. XXVI., (1905), p. 170. Description of the Nissen stamp.
Min. & Sci. Press, Vol. LXXVI., (1898), p. 107. C. P. Stanford. Origin of the California stamp battery.
Ibid., Vol. LXXVIII., (1899), p. 4. Fatigue of stamp stems.
Ibid., Vol. LXXVIII., (1899), p. 5. L. Blanding. An article on the temperature of battery water.
Ibid., p. 264. Abstract from B. McDonald in the *Canadian Mining Institute*, Vol. XVIII., p. 36, on a method for introducing feed water into mortars.
Ibid., p. 400. A. D. Gassaway. Stamp mill for cement gravel.
Ibid., p. 484. Description of the Globe battery stem guide.
Ibid., p. 532. Abstract from the *Canadian Mining Institute*, Vol. II., (1889), p. 149, by Courtenay DeKalb. Adjustments in the stamp mill.
Ibid., Vol. LXXVIII., p. 382. Description of Canda stamp mill cam.
Ibid., Vol. LXXX., (1900), p. 264. Description of Taylor portable, one stamp, hand stamp mill.
Ibid., Vol. LXXXI., (1900), p. 556. Dana Harmon. The author discusses stamp milling.
Ibid., Vol. LXXXIV., (1902), p. 157. Description of the mortar foundations at North Star Mine, Grass Valley, California. Good results were obtained with a concrete base and granite foundations.
Ibid., p. 246. W. H. Washburn. Interesting and valuable article on mortar foundations.
Ibid., Vol. LXXXV., (1902), p. 247. Note on individual mortar stamp mill.
Ibid., p. 268. W. J. Adams. The author claims that sluice plates should not be as wide as the apron plates and that they should have less slope.
Ibid., p. 326. C. M. Myrick. Description of the Cornish stamp mill used for crushing tin stone in Cornwall.
Ibid., Vol. XC., (1905), p. 239. An article discussing the capacity and extraction of stamps and methods for increasing the same.
Ibid., p. 375. Description of the Rapid Economy stamp, a camless mill of the individual circular mortar type.
Ibid., Vol. XCI., (1906), p. 104. Description of the cantilever steel battery frame designed by M. P. Boss.
Ibid., p. 345. Description of a battery stem guide. It is essentially a guide frame, with

sockets to receive removable shells which are the only wearing parts. This type does not require bolts or nuts, simply a set of screen wedges or keys.
Ibid., p. 421. Description of milling changes on the Rand. At the Simmer and Jack mills the 1250 pound stamps have been replaced by 1415 pound stamps. The fine grinders follow the stamps. The tendency is to slime everything.
Ibid., Vol. XCIII., (1906), p. 240. Peter Nissen. Results of tests on Nissen stamp, California stamp, rolls, and Chili mills made by Boston Con. Mining Co., Garfield, Utah.
Ibid., p. 597. Algernon De Mar. Discusses advantages of stamps.
Ibid., Vol. XCIV., (1907), pp. 115, 146, 303. A discussion in which is brought forth disadvantages of simple stamp batteries.
Ibid., p. 211. G. P. Scholl. Discussion on concrete foundations for stamp mills.
Ibid., p. 598. C. D. Kaeding. An article on concrete mortar blocks.
Ibid., Vol. XCV., (1907), p. 434. Description of heavy stamps at the Simmer Deep, Ltd., South Africa.
New Zealand Mines Rec., Vol. VIII., (1905), p. 409. A 20 per cent. increase in tonnage is claimed by the use of a form of rebounding mortar block in use at the Village Deep.
Ibid., Vol. XI., (1907), p. 147. Description of heavy stamps at the Simmer Deep, Ltd., South Africa.
S. African Min. Jour., Vol. VII., (1898), p. 753. An article on the duty of stamps.
Ibid., Vol. VII., (1898), p. 446–457, 360, 378, 420, 505, 729, 920, and 936. Weights and duties of stamps in South Africa.
Ibid., Vol. VIII., (1899), nearly every number gives duties of stamps.
Zeit. Berg-Hütt-u. Salinen-wesen., Vol. LIII., (1905), p. 128. Details concerning an electrically driven stamp for crushing coal previous to coking.

BIBLIOGRAPHY FOR PULVERIZERS OTHER THAN GRAVITY STAMPS.

Am. Inst. Min. Eng., Vol. XXXI., (1901), p. 1004. D. W. C. Nelson. Data on Bryan mills is given.
Ibid., Vol. XXXVI., (1905), p. 227. A. H. Bromley. An article on tube mills.
Ibid., Vol. XXXVII., (1906), p. 3. G. Caetani and E. Burt. Fine grinding by tube mills at El Oro, Mexico.
Ibid., Vol. XXXVIII., (1907), p. 196. E. G. Banks. Tube mill grinding at the Waihi mine, New Zealand.
Am. Mfr., Vol. LXV., (1899), p. 202. No author. Description of Jeffrey coke crusher.
Aust. Inst. Min. Eng., Vol. VIII., (1902), p. 40. Frank Moss. Description of Griffin mills in use at the Great Boulder, Australia.
Berg. u. Hütt. Zeit., Vol. LIX., (1900), p. 263. No author. Comparison of the Heberli mill and Gröndal ball mill.
Ibid., Vol. LXII., (1903), p. 118. Description of the Seiler and Dubois ball mill for clays.
Cal. Reporter, Vol. XIII., (1896), p. 394. Arthur Lakes. Description of the arrastra.
Chem. Met. & Min. Soc. S. Africa, Vol. V., (1905), p. 290. H. A. White. Very complete discussion of the theory of the tube mill. Illustrated.
Ibid., Vol. VI., (1906), p. 308. W. R. Dowling. Good article on tube mill practice.
Ibid., Vol. VII., (1907), pp. 207, 265, 289. S. H. Pearce and W. A. Caldecott. Sizing tests showing work of tube mills in S. Africa.
Ibid., p. 225. Abstract from *Mining Reporter*, Vol. LIV., (1906), p. 599. The work of tube mills.
Ibid., pp. 317, 368. K. L. Graham. Good articles on tube mill practice in S. Africa.
Ibid., p. 348. Description of tube mill grinding at the Waihi mine, New Zealand.
Ibid., p. 417. W. W. Bradley. Description of tube mill lining used at Standard mine, Bodie, California.
Ibid., Vol. VIII., (1907), p. 10. Ralph Stokes. Description of tube mills at Waihi mills, New Zealand.
Ibid., pp. 51, 78. K. L. Graham. Good articles on tube mill practice in South Africa.
Ibid., p. 60. Description of El Oro tube mill lining.
Ibid., p. 63. Robert Clarke. Interesting comparison tests between grinding pans and tube mills.
Clay Worker, Vol. XLIV., (1905), p. 141. The Crossley pebble or ball mill, a small testing laboratory grinder, convenient to charge, run, and discharge.
U. S. Consular Monthly Report, No. 296, (May, 1905), p. 82. Albert W. Swalm, Consul to South Hampton, England. Report states that tube mills in South Africa have proved very successful, an increase of 5 per cent. extraction being made.
Electro. & Met. Ind., Vol. V., (1907), pp. 99, 146. An article on milling practice with special reference to Lane Chili mills.
Ibid., p. 101. Description of tube mill lining used at Standard Mine, Bodie, California.

Ibid., p. 191. S. H. Pearce and W. A. Caldecott. An article on tube mill grinding in South Africa, giving screen tests of work done.
Ibid., p. 422. C. W. Van Law. An abstract from *Mining and Scientific Press*, on tube mills at Guanajuato, Mexico, giving details.
Ibid., p. 422. An article on tube mills in South Africa.
Eng. & Min. Jour., Vol. LXVII., (1899), p. 83. Description of a fine crusher in a stamp mill.
Ibid., p. 234. J. N. Nevins. Description of a talc grinding mill.
Ibid., p. 353. No author. Description of the Kent pulverizing mill.
Ibid., 466. M. F. Leech. The author discusses the value of the arrastra.
Ibid., Vol. LXVIII., (1899), p. 365. Description of the Albert Raymond roller mill.
Ibid., p. 701. No author. Description of the Clark tube mill.
Ibid., p. 760. No author. General article on the arrastra.
Ibid., Vol. LXX., 1900), p. 313. No author. Description of the Simpson pulverizer
Ibid., Vol. LXXVI., (1903), p. 164. An article on regrinding machines.
Ibid., p. 811. W. R. Ingalls. Description of the Ferraris ball mill.
Ibid., Vol. LXXIX., (1905), p. 184. Frank E. Shepard. Description of tube mills at Gold King mill, near Silverton, Colorado.
Ibid., p. 511. An abstract from a paper by Alfred James in *Mining Reporter*, Vol. LII., (1905), p. 135. The author treats of tube mill practice on the Rand, designing of tube mill installation, etc.
Ibid., p. 1099. W. G. West. An article concerning the use of Huntington Mills at El Oro, Mexico, giving costs of wearing parts, capacities, etc.
Ibid., Vol. LXXX., (1905), p. 539. H. A. White. Abstract of author's paper read before the Chem. Met. and Min. Soc. of S. Africa, Vol. V., (1905), p. 290. The author develops the theory of the tube mill and draws conclusions to guide the mill man.
Ibid., p. 932. A short article discussing different methods of attaching rollers in Chili mills so as to utilize the centrifugal force for crushing.
Ibid., Vol. LXXXIII., (1907), p. 475. A trade write up on the Gates ball mill.
Ibid., Vol. LXXXIV., (1907), p. 295. H. W. Hardinge. An article on the Hardinge patent conical tube mill, giving principle of action, results, etc.
Ibid., p. 1133. W. H. Fox. Description of a special feeder for tube mills.
Engineer, Vol. LXXXVIII., (1899), p. 281. No author. An article on the ball mill.
Ibid., p. 606. No author. Description of the Kent pulverizing mill.
Eng. Mag., Vol. XXI., (1901), p. 405. A. G. Charleton. An article on the Huntington mills at the North Boulder mill, West Australia.
Field. Mag., Vol. III., (1901), p. 559. A brief statement of duty of Huntington mills at Butte, Montana.
Genie Civil, Vol. L., (1907), p. 422. P. Chignaterie. Description of crushing machinery for lime, cement, phosphate, and similar materials.
Henshaw, Bulkley & Co. Catalogue describes the Kinkead mill.
Inst. Min. & Met., Vol. XIV., (1904), p. 3. Charles Butters and E. M. Hamilton. Results of numerous tests on re-grinding of sands.
Ibid., p. 48. W. A. Caldecott. A general tentative sketch of some phases of the problem of fine grinding of Witwatersrand and Banket ores and methods of treating the same.
Ibid., Vol. XV., (1906), p. 587. C. E. Parsons. Very valuable article on Huntington mills, giving life of wearing parts, costs, etc.
Ibid., Vol. XVI., (1905), p. 97. Abstract from article by Alfred James, in *Mining Reporter*, Vol. LII., (1905), p. 135. Treats of tube mill practice on the Rand.
Iron & Steel Trades Jour., (July 8, 1905). From *Index Mining Mag.* Brief illustrated description of a new English construction of the hinged hammer stone breaker type.
Iron Trade Rev., Vol. XXXII., (1899), p. 16. No author. Description of the Albert Raymond roller mill.
London Min. Jour., Vol. LXXVIII., (Sept. 2, 1905.) An account of experiments made at Ivanhoe mill, Kalgoorlie, Australia, to determine the relative efficiency of two grinding pans and one 13 feet tube mill.
Min. Ind., Vol. VII., p. 705. An abstract from *Eng. & Min. Jour.*, Vol. LXVII., (1899), p. 234. J. N. Nevins. Description of a talc grinding mill.
Min. Jour., Vol. LXXIX., (1906), pp. 213, 313, 344, 380, 409, 615, 686, and 853. Robert Allen. From *Monthly Journal of the Chamber of Mines of West Australia*. A very complete article on fine crushing machines.
Ibid., Vol. LXXX., (1906), p. 184. An article discussing the use of tube mills for diamond washing at the Premier Diamond mine, South Africa.
Ibid., Vol. LXXXI., (1907), p. 287. Discusses tube milling at the Waihi mine, New Zealand.
Ibid., Vol. LXXXII., (1907), p. 383. Discusses tube mills at Waihi, New Zealand.
Ibid., p. 505. Description of Barry tube mill lining.

Min. Mag., Vol. XI., (1905), p. 173. Walter Broadbridge. Abstracted from *Inst. Min. & Met.*, Vol. XIV., (1904), p. 100. Fine grinding in Wheeler pans.
Ibid., p. 405. George P. Scholl. Illustrated article of Krupp and Abbe tube mills; giving formulæ for calculation of pebble charge, number of revolutions per minute, etc.
Ibid., p. 445. Editorial. Discussion of the advisability of stage crushing. Doubt is expressed as to the fitness of the tube mill to entirely replace the stamp mill.
Ibid., Vol. XII., (1905), p. 236. H. A. White. Digest of paper read before Chem. Met. & Min. Soc., S. Africa, Vol. V. (1905), p. 290. on tube mill theory.
Ibid., p. 279. J. A. Wauchope. Mention is made of use of Lane edge roller as a re-grinder. Author believes in crushing to 1¼ inch before stamping, then stamping through ¼ inch, following by fine crushing with mercury in the Lane slow speed mill.
Ibid., p. 288. Editorial. Discussion as to relative merits of stamp mill, tube mill, and grinding pans. Writer concludes that tube mills will be superseded by grinding pans.
Ibid., p. 416. Abstract from *London Mining Journal*, (1905). Account of experiments by R. B. Nickolson and H. J. Brett to determine the relative efficiency of two grinding pans and one 13-foot tube mill at the Ivanhoe Mill, Kalgoorlie, Australia.
Mines and Minerals, Vol. XX., (1899), p. 63. Arthur Lakes. Description of the arrastra.
Ibid., 303. Arthur Lakes. Description of Standard mills.
Ibid., Vol. XXI., (1900), p. 76. No author. Williams pulverizer.
Ibid., Vol. XXV., (1905), p. 300. Digest of a paper by W. A. Caldecott in *Inst. Min. & Met.*, Vol. XIV., (1904), p. 48. Details of costs of grinding, capacity, power consumption, for tube mills, with special reference to West Australia practice.
Ibid., p. 312. Brief illustrated description of Jeffrey hammer crusher for coal, clay, shale, and rock.
Ibid., p. 391. Description of Williams hinged hammer coal crusher, giving capacities, etc.
Ibid., p. 400. Abstract of article by Davidson in *Inst. Min. & Met.*, Vol. XIV., (1904), p. 154. Pebble mills for fine grinding.
Ibid., Vol. XXVI., (1905), p. 53. Arthur Lakes calls attention to the chert of lower Carboniferous limestones and the quartzite in the lower Cambrian and Algonkian of Colorado in case hard stones are required for tube mills.
Ibid., Vol. XXVI., (1905), p. 77. H. A. White. Digest of paper read before the Chem. Met. & Min. Soc. of S. Africa, Vol. V., (1905), p. 290. on tube mill theory.
Ibid., p. 511. G. Caetani and E. Burt. Abstract from *Am. Inst. Min. Eng.*, Vol. XXXVII., (1906), p. 3. Fine grinding by tube mills at El Oro, Mexico.
Ibid., Vol. XXVII., (1907), p. 297. Complete account of tube mills on the Rand.
Ibid., p. 334. An article on fine grinding ball mills in Australia.
Ibid., pp. 464, 492. Description of tube mill practice at the Waihi mine, New Zealand.
Ibid., Vol. XXVIII., (1907), p. 126. Description of tube milling in South Africa.
Ibid., Vol. XXVII., (1907), p. 520. Description of El Oro tube mill lining.
Min. Rep., Vol. LI., (1905), pp. 240 and 333. A. W. Warwick. Abstract from *West. Chem. and Met.*, Vol. I., (1905), p. 37. Good articles on fine grinding of gold ores with special reference to tube mills.
Ibid., p. 259. Report of government mining engineer on experiments on crushing with stamps to coarse mesh, classifying, and tube milling coarse product, then amalgamating by passing pulp over shaking amalgamating plates.
Ibid., p. 287. A. W. Warwick. Article giving general description of tube mills with drawings. Discusses types of tube mills, capacity, linings, duration, and adjustments.
Ibid., p. 307. A. W. Warwick. The mechanics of the tube mill.
Ibid., p. 579. A. W. Warwick. Discussion of the tube mill.
Ibid., Vol. LII., (1905), p. 135. Alfred James. Discussion of regular tube mill practice on the Rand, with notes on the rates of revolution, weight of correct pebble charge, etc.
Ibid., p. 284. Abstract from Chamber of Mines, West Australia concerning comparative tests of two grinding pans and one 13-foot tube mill at Ivanhoe mill, Kalgoorlie, Australia.
Ibid., p. 514. Editorial comment on the success of the grinding pan over the tube mill at the Ivanhoe Gold Mines Corporation, Kalgoorlie, Australia.
Ibid., Vol. LIV., (1906), p. 599. Description of ball mills in Kalgoorlie, Australia; touches upon feeding, capacity, screen analysis of products, speed, wear, etc.
Ibid., Vol. LV., (1907), p. 251. Description of the Wild re-grinding mill.
Ibid., p. 413. An article discussing tube mills on the Rand. Results of adding tube mills to mill equipment has largely increased capacity and extraction.
Ibid., p. 515. C. C. Lane. Development of Chili mills.
Ibid., p. 543. J. A. Stewart. Describes milling practice with the Lane Chili mill.
Ibid., p. 599. An article on ball mills.
Ibid., Vol. LVI., (1907), p. 285. Description of the Humphrey quartz mill.
Ibid., p. 517. J. Johnson. Description of the Johnson ore mill.

Min. & Sci. Press, Vol. [illegible], [illegible], p. [illegible]. No author. Discusses a fine crusher in the stamp mill.

Ibid., p. [illegible]. [illegible] Bailey. Describes the construction of the arrastra.

Ibid., p. [illegible], [illegible], p. [illegible]. No author. Discusses grinders in the stamp mill.

Ibid., p. [illegible]. No author. Description of the Clark tube mill.

Ibid., p. [illegible], [illegible], p. [illegible]. No author. Description of the Griffin mill.

Ibid., p. [illegible], p. [illegible]. Philip Argall. Abstract from the *West. Chem. & Met.*, Vol. I., (1905), p. [illegible]. Discussion of A. W. Warwick's papers.

Ibid., p. 349. Illustration of a series of Bryan roller mills used in Cananea, Mexico, for re-grinding.

Ibid., p. [illegible], p. [illegible]. E. E. Wann. The author recommends the crushing of every particle of gold ore to the size equal to that of the most minute particle of gold contained, both for amalgamation and cyaniding.

Ibid., Vol. [illegible], [illegible], p. 344. Charles Butters. Account and results of tube mill experiences at El Oro, Mexico. Contains much valuable information.

Ibid., Vol. [illegible], [illegible], p. [illegible]. Costs of tube mill lining at Waihi mine, New Zealand.

Ibid., p. [illegible]. R. G. Brown. Details given of the tube mills at the Standard mill, Bodie, California.

Ibid., p. [illegible]. S. D. McNicken. Description of tube mill lining of hard iron segments held in place by longitudinal bars. These bars hold the flints and so reduce the wear on the linings.

Ibid., p. [illegible]. A. E. Drucker. Note on tube mill lining. Hard quartz laid in cement replaced by cast steel.

Ibid., Vol. XCIV., 1907, p. 17. W. W. Bradley. Description of tube mill linings at Standard mill, Bodie, California.

Ibid., p. 147. Description of milling practice with Lane Chili mill.

Ibid., p. 317. Description of Allis-Chalmers ball mills, regarding quality of work, wear, etc.

Ibid., p. 414. Description of the Wild re-grinding mill.

Ibid., p. 431. Robert Clarke. Interesting comparison between grinding pans and tube mills.

Ibid., p. 541. U. C. Groch and F. J. Nagel. Description of special feeder for tube mills.

Ibid., p. 574. An article on tube mills.

Ibid., Vol. XCV., (1907), p. 205. C. W. Van Law. Description of tube mills at Guanajuato, Mexico.

Ibid., p. 466. Description of tube mill lining at El Oro, Mexico.

Ibid., p. 356. Description of the Graupner mill, a centrifugal roller mill similar to the Huntington.

Ibid., p. 555. An article on tube mills in South Africa.

Min. World., Vol. XXIV., (1906), p. 634. C. E. Parsons. A valuable paper on Huntington mills. Abstracted from *Inst. Min. &. Met.*, Vol. XV., (1906), p. 587.

Ibid., Vol. XXV., (1906), p. 6. C. C. Schnatterbeck. An abstract from the U. S. Geol. Survey paper on "Abrasive Materials." Pebbles for tube mills.

Ibid., Vol. XXVI., (1907), pp. 306, 446. Description of tube mill grinding at the Waihi mill, New Zealand.

Ibid., p. 699. Description of the Wild re-grinding mill.

Ibid., Vol. XXVII., (1907), p. 1005. H. W. Hardinge. An article on the Hardinge conical tube mill, giving principle of action, results, etc.

Metallurgie, Vol. III., (1906), p. 408. C. Blömeke. A complete article on ball and tube mills.

Ibid., Vol. IV., (1907), p. 422. C. Blömeke. Description of new fine crushing machines, showing Humboldt high-speed rolls and the Roulette ball mill.

New Zealand Min. Rec., Vol. VIII., (1905), p. 428. Alfred James. Notes on tube mill grinding. Abstracted from contributions to discussions, *Inst. Min. & Met.*, Vol. XIV., (1904), p. 96.

Ibid., p. 429. H. Leupold. Tube mill results in South Africa. Abstracted from S. African Assoc. Eng.

Ibid., Vol. X., (1907), p. 477. Tube mill grinding at the Waihi mill, New Zealand.

Ibid., Vol. XI., (1907), p. 108. S. D. McMiken. An article on tube mill liners, wear, cost, etc.

Ibid., p. 145. An article on tube mill grinding at Waihi, New Zealand.

Oest. Zeit., Vol. XLIX., (1901), p. 429. G. Gröndal. Treatment of iron ore by Gröndal ball mills.

Ibid., Vol. LIII., (1905), p. 491. Illustrated description of a ball mill with air pressure attachment for separating the coarse and fine ore, with elevator for returning the oversize. Capacity 5 tons in 24 hours.

[illegible], Vol. IV., (1907), p. 327. Description of grinders for cement.

Ibid., p. 480. An article on cement grinding.

Ibid., p. 563. A complete account of tube mill grinding on the Rand.
Ibid., p. 569. Trade write up on the Gates ball mill.
S. African Min. Rep., Vol. LV., (1907), p. 201. H. S. Kenney. Cleaning up sands from roller mills.
Thon Ind. Zeit., Vol. XXIII., (1899), pp. 339 and 566. Description of a new under-driven Chili mill.
Ibid., p. 805. Description of a machine for crushing clay.
Ibid., p. 1099. E. Rüsager. Capacity and power of rolls, tube mills, and dry separators for cement.
Ibid., pp. 1283 and 1318. Data on several patents for tube mills.
Ibid., Vol. XXIV., (1900), p. 38. No author. Description of Raymond Bros. roller mill.
Ibid., pp. 299 and 639. No author. Description of Schmidlieing Chili mill.
Ibid., p. 1028. No author. Description of combined cone and horizontal ball mill.
Ibid., p. 1113. J. Poettgens. Description of patent ball mill using roller instead of balls.
Ibid., p. 1114. No author. Description of mill similar to the Kent.
Ibid., p. 1276. No author. Description of a cone mill.
Ibid., p. 1324. H. A. Siordet. An article on the motion of the roller of a Griffin mill and its crushing force.
Ibid., p. 1059. No author. Description of the Krupp ball mill.
Ibid., p. 1881. No author. Description of Chili mills.
Ibid., p. 2063. No author. Description of wet Chili mills.
Ibid., Vol. XXIX., (1905), p. 74. An article on the crushing of burnt gypsum in cone mills with illustrations of several crushing and grinding mills used.
Ibid., p. 132. Question and answer as to what machine is best suited for crushing calcareous tuff. Answer states that Chili mill is best suited for the work.
Ibid., p. 1041. Amende Braunschweig. The author illustrates the different forms of Chili mills used by the clay industry.
Ibid., p. 1384. Description of a dry ball mill with elevator and mud separator for taking out the fines and returning the coarse to the mill. Capacity is from 5 to 6 tons to cement fineness in a working day.
Ibid., p. 1385. Illustrated description of a continuous, dry grinding, sieveless ball mill; the sorting of the ground and unground material being done by air pressure.
Ibid., p. 1433. An illustrated description of a double tube mill and a gyratory pendulum grinding mill, both made by the Fried. Krupp Grusonwerk, Germany.
Ibid., p. 1521. Descriptions of a crushing plant used to crush lime before slaking.
Ibid., p. 1561. Illustrated description of tube mills used to grind cement. Made by F. L. Smith & Co., Copenhagen.
Ibid., p. 1743. Illustrated description of a step roller crushing mill.
Ibid., p. 1805. An illustrated article of a wet crushing mill made by "Der Leitzer Eisengiesserei und Maschinenbau Aktien Gesellschaft." Similar to the Chili mill.
Ibid., p. 1881. Illustrated description of grinding mill used in conjunction with a brick press. Made by the Giesserei und Maschinenfabrik Konstang.
Ibid., Vol. XXX., (1906), p. 685. Description of the Kominor ball mill and the Dana tube mill.
Ibid., Vol. XXXI., (1907), p. 1220. Description of Chili mill with two sets of rollers.
Ibid., p. 1229. Description of a triple deck Chili mill.
U. S. Geol. Survey Min. Resources, (1906), p. 1153. An article on grinding of scrap mica in Mitchell County, North Carolina.
Ibid., p. 1255. An article on the grinding of quartz.
Zeit. Berg-Hütt-u. Salinen-wesen, Vol. LIII., (1905), p. 125. Description and uses of a wet ball mill manufactured by the Humboldt Eng. Works Co. Capacity 10 to 12 tons in 24 hours. Sizing tests of pulp given.
Zeit. Ver. Deut. Ing., Vol. XXXIX., (1906), pp. 1587–1592. Grinding cement.
Ibid., Vol. XLI., (1907), pp. 668–674. Grinding cement

Bibliography for Laws of Crushing.

Can. Min. Inst., Vol. IV., (1901), p. 205. J. B. Porter. Tabulated results of crushing and sizing tests.
Cassiers Mag., Vol. XIII., (April, 1898), p. 496. James Douglas. Principles and operation of crushing and grinding machinery.
Chem. Met. & Min. Soc. S. Africa, Vol. VII., (1906), p. 72. S. H. Pearce and N. A. Caldecott. Means of comparing crushing efficiency of various crushing machines.
Inst. Min. & Met., Vol. VII., (1899), p. 35. No author. A comparison between wet and dry crushing for cyaniding.
Sch. Mines Quart., Vol. XXVII., (1904), p. 28. H. W. Gartrell. Results of experiments to determine the effect of variation in the speed of crushing upon the production of undersize material.

Min. & Sci. Press, Vol. LXXVIII., (1899), p. 584. Frank Merrick. A comparison between wet and dry crushing. Abstracted from *Inst. Min. & Met.*
Ibid., Vol. LXXIX., (1899), p. 492. A. B. Paul. A comparison between breakers, rolls, ball mills, and stamps.
Ibid., Vol. XC., (1905), p. 152. Paul Danckwardt. Relative merits of wet and dry crushing for cyanidation. Abstracted from Transactions of the Black Hill Mining Assoc.
Ibid., p. 357. P. Argall. Ideas on a modern fine crushing plant.
Ibid., Vol. XCI., (1905), pp. 209 and 228. A general description of the advance in crushing machinery.
Ibid., Vol. XCII., (1906), p. 198. J. Parke Channing. Graded crushing at Lake Superior.
Ibid., Vol. XCV., (1907), p. 621. E. A. Hersom. An article on the theory of crushing.

Bibliography for Preliminary Washers.

Am. Mfr., Vol. LXIII., (1898), p. 375. A brief statement of progress in concentrating iron ore of the Menominee Range.
Annules des Mines de Belique, Vol. V., (1900), p. 253. Description of the Coppée coal washer.
Coll. Guard., Vol. LXXVI., (1898). p. 256. M. A. Sattiaux. Description of a combined disintegrator and screen for coal.
Ibid., Vol. LXXVII., (1899), p. 62. W. Kellett. An article on iron ore washing.
Eng. & Min. Jour., Vol. LXVIII., (1899), p. 729. No author. Description of the Anaconda coal washer.
Ibid., Vol. LXX., (1900), p. 430. No author. Description of the Burnett and Newbegin washer.
Ibid., Vol. LXXXII., (1907), p. 846. Description of the New Century disintegrating screen.
Inst. Min. & Met., Vol. XVII., (1899), p. 290. W. Kellett. An article on iron ore washing.
Metallurgie, Vol. IV., (1907), p. 515. C. Brömeke. The use of wash trommels, touching upon the various designs adapted for different conditions.

Bibliography for Sizing Screens.

British Soc. Min. Students, Vol. XXII., (1900), p. 105. W. W. Beaumont. Description of the Vibromotor Screen.
Ibid., Vol. LXXXIV., (1902), p. 1393. Description of the Allard coal screening method.
Comptes-Rendus Soc. Ind. Min., (1907), p. 21. Description of a new spring for shaking screens.
Coll. Guard., Vol. LXXVII., (1899), p. 157. No author. Description of the Bray coal screen.
Ibid., Vol. LXXIX, (1900), p. 882. No author. Description of the Vibromotor screen. Abstracted from *British Soc. Min. Students*, Vol. XXII., (1900), p. 105.
Dinglers Polyt. Jour., Vol. CCCXVIII., p. 160. Description of the great screening tower at Hensburg.
Eng. & Min. Jour., Vol. LXVIII., (1899), p. 69. No author. Description of the Bray coal screen.
Ibid., Vol. LXIX., (1900), p. 466. No author. Description of the Berthelet inclined screen.
Ibid., Vol. LXX., (1900), p. 731. No author. Description of the Pratt-Wethey screen.
Ibid., Vol. LXXIII., (1902), p. 558. Description of the Sturtevant toggle separator.
Ibid., p. 767. Description of the Seitz portable coal loading and screening machine.
Ibid., Vol. LXXV., (1903), p. 335. Description of the McDermott Sizer.
Ibid., Vol. LXXX., (1905), p. 347. Description of a rotary screen on a fixed shaft used at the new plant of the Trevorten Coal Land Co., Trevorten, Penn.
Ibid., p. 435. A. H. Wethey. Description of the Pratt ore sizer.
Ibid., p. 867. Description of the shaking screens in use at the Truesdale Coal Washery.
Ibid., Vol. LXXXI., (1906), p. 468. J. M. Callow. Description of the Callow traveling belt screen.
Ibid., Vol. LXXXIII., (1907), p. 236. Description of the King revolving screen.
Ibid., p. 1041. E. Ferraris. Description of hand screen used at Monteponi, Sardinia.
Ibid., Vol. LXXXIV., p. 1120. Description of the Newaygo screen. Gives capacity, etc.
Iron Age, Vol. LXII., (1898), p. 11. Dec. 1. Description of the Jeffrey Columbian separator.
Ibid., Vol. LXVI., (1900), p. 11. Aug. 30. Description of the Aultman balanced shaking coal screen.
Ibid., Vol. LXXX., (1907), p. 988. Description and capacity of the Newaygo screen.
Iron & Coal Trades Rev., (Feb. 17, 1905). Brief illustrated description of a coal screen.
Iron & Steel Inst., Vol. LXIII., (1903), p. 609. A list of papers on coal screening is given.
Inst. Min. & Met., Vol. X., (1902), p. 233. Philip Argall. A paper entitled "Sampling and dry crushing in Colorado." Treats of screens and screening.
Ibid., Vol. XV., (1906), p. 524. J. H. Collins. Description of the Wilfley impact screen at the Wheal Kitty used for treating Wilfley tailings.

Min. Mag., Vol. XI., (1905), p. 333. Charles W. Wright. Description of the Ferraris waving screen.
Mines & Minerals, Vol. XXI., (1900), p. 113. No author. Description of the Aultman balanced shaking screen.
Min. Reporter, Vol. LI., (1905), p. 10. Description of the Imperial ore screen.
Ibid., Vol. LIII., (1906), p. 608. Description of the Weller pulp thickener at the Jackson mill, Idaho Springs, Colorado.
Ibid., Vol. LV., (1907), p. 79. Description of the King revolving screen. States advantages of its use.
Min. & Sci. Press, Vol. LXXVII., (1898), p. 404. No author. Description of the Jeffrey Columbian separator.
Ibid., Vol. LXXXI., (1900), p. 156. No author. Description of the Crown dry ore sizer and concentrator.
Ibid., Vol. LXXXIV., (1902), p. 113. S. I. Hallett. A comparison between screen and hydraulic sizing.
Ibid., Vol. XCIV., (1907), p. 318. Description of the King revolving screen, and advantages of its use.
New Zealand Min. Rec., Vol. IX., (1905), p. 29. An article showing size of screens used at the Waihi mill, New Zealand.
Oest. Zeit., Vol. LI., (1903), p. 57. A description and illustration of a gyrating screen used for screening coal.
Revue de Metallurgie, Vol. IV., (1907), p. 445. Description of the King revolving screen.
Zeit. Berg-Hütt-u. Salinen-wesen, Vol. XLVII., (1898), p. 210. Description of the Cox screen.
Ibid., Vol. LIV., (1906), p. 278. Use of bronze wire screen at Lautenthal.

BIBLIOGRAPHY FOR THE PRINCIPLES OF SCREEN SIZING.

Am. Inst. Min. Eng., Vol. XXXV., (1905), pp. 256–287. W. S. Hutchinson. Discussion of standardization of screens.
Ibid., Vol. XXXVII., (1906), p. 265. E. A. Hersam. Complete discussion of the question — size of opening versus mesh.
Can. Min. Inst., Vol. II., (1899), p. 33. F. T. Snyder. Discussion of metallurgical standards.
Can. Min. Rev., Vol. XVIII., (1899), p. 33. F. T. Snyder. Discussion of metallurgical standards.
Chem. Met. & Min. Soc. So. Africa, Vol. VI., (1905), p. 115. A. Whitby. Ideas on standardization of screens.
Ibid., Vol. VI., (1906), p. 293. Report of committee on standardization of screens.
Ibid., Vol. VII., (1907), p. 346. Philip Argall. Standardization of screens. Abstracted from *Min. & Sci. Press*, Vol. XCIII., (1906), p. 654.
Electro. & Met. Ind., Vol. V., (1907), p. 512. Discussion on standardization of screens, and gives the sieve scale of the Inst. Min. & Met.
Eng. & Min. Jour., Vol. LXXIX., (1905), p. 469. H. S. Denny. Sizing tests of sands and slimes. Abstract of paper read before South African Association of Engineers.
Ibid., p. 1140. W. McDermott. Circular of the Inst. Min. & Met. sent to mill men everywhere to arouse discussion of the question of a standard of screens for screen analysis.
Ibid., Vol. LXXX., (1905), p. 151. Courtenay DeKalb. Discussion of standardization of screens for screen analysis.
Ibid., p. 213. W. S. Hutchinson. Discussion of the standardization of screens for screen analysis.
Ibid., 592. Discussion of the relative advantages and disadvantages of shaking and cylindrical screens as breaker screens.
Ibid., Vol. LXXXII., (1906), p. 925. F. W. Parsons. Description of a coal screen device patented by W. O. Gunckel, Terra Haute, Ind.
Ibid., Vol. LXXXIII., (1907), p. 526. Standardization of screens. Sieve scale of the Inst. Min. & Met. is given.
Inst. Min. & Met., Bulletin No. 5. George T. Holloway. Author considers the disadvantages of use of the mesh designation. Tables are given.
Iron Trade Rev., Vol. XXXII., (1899), p. 12, March 23; p. 16, March 30. S. H. Stupakoff. An article on wire gauges.
Min. Reporter, Vol. LII., (1905), p. 185. Abstract of paper sent to members of the Inst. Min. & Met., concerning standardization of screens for screen analysis.
Ibid., Vol. LV., (1907), p. 215. An article on standardization of screens. The sieve scale of the Inst. Min. & Met. is given.
Min. & Sci. Press, Vol. LXXVIII., (1899), p. 176. "Millman" discusses action of screens.
Ibid., p. 485. F. T. Snyder. Metallurgical standards. Abstract from *Can. Min. Inst.*, Vol. II., (1898), p. 3.

Ibid., Vol. XCIII., (1906), p. 654. P. Argall. Comments on report of South African Committee on standardization of screens.
Ibid., Vol. XCIV., (1907). p. 52. R. H. Richards. Discusses standardization of screens.
Min. World, Vol. XXV., (1906), p. 65. G. T. Holloway. Disadvantages of mesh designation for screens. Abstracted from *Inst. Min. & Met.*, Bull. No 5.

Bibliography for Classifiers.

Am. Inst. Min. Eng., Vol. XXXI., (1901), p. 619. F. H. Regei. Description of operation of the Klein classifier.
Chem. Met. & Min. Soc. So. Africa, Vol. VII., (1907), p. 403. A. Salkinson. Use of steam for settling slimes.
Eng. & Min. Jour., Vol. LXIX., (1900), p. 441. No author. Ayton intermittent thick pulp extractor.
Ibid., p. 1090. Abstract from the *Chem. Met. & Min. Soc. So. Africa*, Vol. V., (1905), p. 238. H. Leupold offers as an improvement on the ordinary Bilharz spitzlutte, a spitzlutte made by him for the Treasury mine.
Ibid., Vol. LXX., (1900), p. 441. No author. Ayton intermittent thick pulp extractor.
Ibid., Vol. LXXXI., (1906), pp. 649 and 1151. F. W. Parsons. Recovery of water from coal washing.
Ibid., Vol. LXXXII., (1906), p. 206. Courtenay DeKalb. Description of the DeKalb classifier, a device for separating sand from slime.
Ibid., p. 348. E. J. Sweetland. Settling box for recovering water used at the American mill at Goldfield.
Ibid., Vol. LXXXIII., (1907), p. 1251. R. H. Richards. Richards' undercurrent for saving black sands.
Mines & Minerals, Vol. XXII., (1901), p. 545. No author. Brief description of the Dimmick classifier.
Ibid., Vol. XXV., (1905), p. 300. Digest by Torrents of an article in the *Jour. Chem. Met. & Min. Soc. So. Africa*. A settling tank for ore dressing.
Min. Reporter, Vol. XLVII., (1903), p. 78. Description of Isbells improved hyrdaulic sizer.
Ibid., Vol. LI., (1905), p. 307. A. W. Warwick. Discussion of what constitutes slimes.
Ibid., p. 333. A. W. Warwick. The author defines "slimes" as "that part or portion of crushed ore possessing the property of forming calloid hydrates, when mixed with water."
Ibid., p. 579. A. W. Warwick. The author takes up different discussions of his paper on tube mills, especially as regards slimes.
Ibid., Vol. LVI., (1907), p. 192. A. Salkinson. The author treats of the use of steam for settling slimes.
Min. & Sci. Press, Vol. LXXXV., (1902), p. 221. Principle of Klein's hydraulic classifier.
Ibid., Vol. LXXXVII., (1903), p. 83. A description of the Hamboic classifier. Illustrated.
Ibid., Vol. XCI., (1905), p. 449. J. M. Callow. Flow sheet of mill operated on Callow system of ore classification using Callow settling and pulp thickening tank.
Min. World, Vol. XXVII., (1907), p. 241. Description of the Bruyn slime separator, a double cone classifier.
Ibid., p. 483. Trade write up on Callow tanks.
Sch. Mines Quart., Vol. XXII., (1901), p. 449. Henry S. Munroe. Description of a new laboratory classifier.
Sci. Am. Supp., No. 1552, p. 24874. Sir Wm. Crookes. Abstract of a lecture before the South African meeting of the British Association for the Advancement of Science. Author touches upon the washing pan and pulsator.
Thon-Ind. Zeit., Vol. XXIV., (1900), p. 1336. No author. Description of the hydraulic classifier.
Zeit. Berg-Hütt-u. Sainenl-wesen, Vol. LV., (1907), p. 132. Description of a concrete settling pond used in the Harz Mountains.

Bibliography for Laws of Classification.

Am. Inst. Min. Eng., Vol. XXXVIII., (1907), p. 210. Robert H. Richards. "Velocities of Galena and Quartz grains falling in water."
Coll. Guard., Vol. LXXIX., (1900), p. 499. L. Kleritz and O. Bilharz. Discussion of the theory of separation by a hydraulic centrifugal separator.
Jern. Konterets Annaler, (1906), p. 321. G. G. Bring. A very complete study of the action of sands in classifiers and jigs.
Min. & Sci. Press, Vol. LXXXIV., (1902), p. 113. S. I. Hallett. Discussion of screen versus hydraulic sizing.
Ibid., Vol. XC., (1905), p. 132. J. O. Dimmick. Importance of classification as a preliminary to further concentration.

Oest. Zeit., Vol. LVIII., (1900), p. 121. L. Kleritz and O. Bilharz. Mathematical discussion of the theory of separation by a hydraulic centrifugal separator.
Zeit. Ver. Deut. Ing., Vol. L., (1906), p. 1947. W. Rottmann. Mechanical settling and filtering of sands.

Bibliography for Hand Picking.

Cassier's Mag., Vol. XIV., (1898), p. 3. A. C. Key. An article on ore sorting at South African gold mines.
Coll. Guard., Vol. LXXVII., (1899), p. 703. A. H. Roberts. Description of a mechanical slate picker.
Eng. Mag., Vol. XV., (1898), p. 51. Webb and Yeatman. An article on ore sorting at South African gold mines.
Eng. & Mag. Jour., Vol. LXVIII., (1899), p. 515. No author. Description of the ore sorting belt at the Aurora West Mine, Transvaal.
Ibid., Vol. LXIX., (1900), p. 142. No author. Description of Robins conveying and picking belts.
Ibid., Vol. LXXX., (1905), p. 735. Description of the Nichter spiral slate picker in use at the Truesdale breaker of the Lackawanna Company.
Ibid., Vol. LXXXI., (1906), p. 1139. E. H. Messiter. Detailed description of picking belts regarding speed, etc.
Iron & Coal Trades Rev., Vol. LVIII., p. 200. Description of Wrightson's coal picking table.
Metallurgie, Vol. IV., (1907), p. 248. C. Blömeke. Description of Luhrig picking table.
Mines & Minerals, Vol. XIX., (1899), p. 412. A. H. Roberts. Description of a mechanical slate picker.
Ibid., Vol. XX., (1900), p. 342. A. Langerfeld. Description of a new coal picker.
Min. Reporter, Vol. LI., (1905), p. 9. Brief description of methods used in washing and sorting ores at different mines of the Cripple Creek district, Colorado.
Ibid., Vol. LII., (1905), p. 107. Article dealing with hand sorting of low grade ore at the Moyer mine, Leadville, Colorado.
Ibid., Vol. LV., (1907), p. 32. An article on the advantages of hand picking.
Min. & Sci. Press, Vol. XC., (1905), p. 102. Description of methods of washing and hand sorting at several different mills in Cripple Creek, Colorado.
Oest. Zeit., Vol. LV., (1907), p. 544. Nichter spiral slate picker.
Sch. Mines Quart., Vol. XXI., (1899), p. 1. G. A. Denny. An article on hand sorting.
So. African Min. Jour., Vol. VII., (1898), pp. 550 and 935. Complete description of hand sorting in South Africa.
Ibid., Vol. VIII., (1899), p. 403. No author. An equation for hand sorting.
Ibid., p. 403. A mathematical discussion of ore sorting leading to a mathematical equation.
Ibid., p. 893. Description of a Robins picking belt installed at the Aurora West mill.

Bibliography for Jigs.

Berg. u. Hütt. Zeit., Vol. LIX., (1900), p. 2. C. Blömeke. Description of the Rompf patent jig screen.
Ibid., Vol. LXII., (1903), p. 188. Descriptions of the Baum-Herne coal washing jig.
Am. Inst. Min. Eng., Vol. XXXI., (1901), p. 619. F. H. Regel. Description of the Klein jig.
Can. Min. Rev., Vol. XIX., (1900), p. 196. Editor. Description of W. J. Evans' short and quick stroke on jigs at Great Falls.
Ibid., Vol. XXVII., (1906), p. 24. An article dealing with the Hancock jig installed at Mine La Monte, and St. Joseph Lead Company's mills in Missouri.
Coll. Guard., Vol. LXXVI., (1898), p. 320. An abstract on the use of Oberegger's jig in coal washing.
Ibid., Vol. LXXVII., (1899), p. 778. W. J. May. Short article on the principles of water separation.
Ibid., Vol. LXXIX., (1900), p. 544. C. Blömeke. Description of a new jig screen.
Comptes-Rendus, (1907), p. 301. M. Lenicque. Comparative work of jigs and Ferraris table.
Eng. & Min. Jour., Vol. LXXIX., (1905), p. 923. Description of Hancock jig with illustrations.
Ibid., Vol. LXXIX., (1905), p. 491. W. S. Thyng. Illustrated description of a hand jig regards feed, capacity, stroke, number of strokes per minute, duration of jigging operation, economy.
Ibid., Vol. LXXXII., (1906), p. 60. Description of the Wall jig which is similar to the Hancock jig. Good results were obtained.
Ibid., Vol. LXXXIII., (1907), p. 425. Description of the Traylor all-iron jig.

Ind., Vol. LXXXIV., 1907, p. 76. S. B. Peele. Use of the Stewart jig in coal washing.
Ind., p. 1063. J. T. Gibson. Description of the Woodbury jigging system.
Iron Age, Vol. LXXVI., 1905, p. 1234. Description of jigs at a Pittsburg coal washer.
Jern. Kontorets Annaler, 1905, p. 321. G. C. Bring. Results of a great amount of experimenting on jigs.
Mines & Minerals, Vol. XXVII., 1907, p. 329. Use of the Pittsburg jig in coal washing.
Min. Reporter, Vol. LII., 1905, p. 190. Description of a jig screen protection device. At the Stannco Copper Company's mill, the jig screens are protected from the corrosive action of H_2SO_4 and metallic salts in solution, by passing a current of low voltage from a graphite anode hung beneath the screen, to the screen as a cathode. Corrosion ceases and an even copper is deposited to make up for the metal lost by abrasion. Both the time of replacing screens and price is saved.
Min. & Sc. Press, Vol. LXXXVII., 1903, p. 148. Description of the new Century drop motion jig.
Min. Wealth, Vol. XXIV., 1906, p. 214. Description of the Hedberg jig.
Ind., Vol. XXVI., 1907, p. 512. G. E. Edwards. Description of the Woodbury jigging system.
Oest. Zeit., Vol. XLVI., 1898, p. 685. V. Waltl. Use of the Oberegger jig for coal washing.
Ind., Vol. XLVIII., 1900, p. 138. C. Blumeke. Description of the new Rompf jig screen.
Ind., Vol. LVII., 1899, p. 257. No author. Description of the Oberegger jig.
Prakss. Zeit., 1898, p. 134. Brief description of the jig used at the Reden coal mines.
Zeit. Berg-Hütten. Sal.-wesen, Vol. XLIX., 1901, p. 332. Description of changes in jigging in the Harz mountains.

Bibliography for Laws of Jigging.

Can. Min. Rev., Vol. XIX., 1900, p. 190. Editorial. New developments in jigging.
Coll. Guard., Vol. LXXVII., 1899, p. 171. Walter J. May. Discussion of close sizing before jigging.
Mines & Minerals, Vol. XXV., 1905, p. 165. Principle and advantages of jigging.
Min. & Sc. Press, Vol. LXXXI., 1900, p. 405. No author. Evans' ideas on jigging at Great Falls.

Bibliography for Fine Sand and Slime Concentrators.

Am. Inst. Min. Eng., Vol. XXIV., 1904, p. 572. E. A. Sperry. Description of the Sperry vanning buddle.
Ibid., Vol. XXXVIII., 1907, p. 556. R. H. Richards. A study of the Wilfley table, treating natural, sized, and classified products.
Berg. u. Hütt. Zeit., Vol. LXII., 1903, p. 118. Description of the Bartsch round concentrating table.
Ibid. Description of the Krupp Grusonwerk concentrating table.
Can. Min. Rev., Vol. XVII., 1898, p. 43. F. T. Snyder. Description of a gyrating vanner.
Ibid., (November 1898), p. 287. Thomas White. Description of an automatic blanket table.
Ibid., Vol. XIX., 1900, pp. 43, 189. Editorials. Use of Wilfley tables in Canadian mills.
Coll. Guard., Vol. XXVII., 1899, p. 678. R. A. Thomas. An article on the use of Frue vanners in Cornwall.
Eng. Mag., Vol. XIX., 1900, p. 823. Thomas Tonge. Description of the use of Wilfley tables on old zinciferous tailings at Leadville.
Eng. & Min. Jour., Vol. LXVII., 1899, p. 383. No author. Description of the Cammett table.
Ibid., Vol. LXVIII., 1899, p. 191. No author. Description of the Bartlett table.
Ibid., Vol. LXIX., 1900, p. 352. No author. Description of the Hallett table.
Ibid., Vol. LXX., (1900), p. 403. No author. Notes on dry concentration by the Cammett table.
Ibid., Vol. LXXVI., (1903), p. 933. Description of the Pinder concentrator.
Ibid., Vol. LXXIX., (1905), p. 299. Description of the Dillon concentrator made by the Dillon Iron Works Company.
Ibid., Vol. LXXX., 1905), p. 121. Description of the Bartlett simplex concentrator, manufactured by the Colorado Iron Works Company.
Ibid., p. 723. George Attwood. Description of the mechanism and principle of the Dodd buddle. Abstracted from the *Am. Inst. Cir. Eng.*, Vol. CLIX.
Ibid., p. 1106. Edward Walker. Description of the Buss slimer made by the Luhrig Company, London, England.
Ibid., Vol. LXXXII., (1906), p. 316. Description of the Deister concentrator.
Ibid., Vol. LXXXIII., (1907), p. 713. Description of the Akens and Evans slime concentrators.

Ibid., p. 905. E. Walker. Description of the Acme concentrator.
Ibid., Vol. LXXXIV., (1907), p. 968. R. Meeks. Description of the Traylor concentrator.
Inst. Min. Eng., Vol. XXIII., (1903), p. 435. C. R. Claghorn. Description of the Campbell coal washing table.
Inst. Min. & Met., Vol. VII., (1899), p. 175. R. A. Thomas. An article on the use of Frue vanners without previous classification of tin ores.
Ibid., Vol. XV., (1906), p. 299. L. H. L. Huddart. Description of the Acme combined concentrator.
Metallurgie, Vol. IV, (1907), p. 193. C. Blömeke. Description of the Groppel concentrator.
Ibid., p. 513. C. Blömeke. Description of the Humboldt riffle concentrator.
Ibid., p. 632. Description of the Sherman slime concentrator.
Min. Jour., Vol. LXXXII., (1907), pp. 298, 343, and 375. R. H. Richards. A complete study of the Wilfley table treating different classes of feed. Abstracted from *Am. Inst. Min. Eng.*, Vol. XXXVIII., (1907), p. 556.
Mines & Minerals, Vol. XXII., (1901), p. 99. W. G. Weatherby. Description of the New Standard concentrator at the Lost Chance mill.
Ibid., p. 334. Announcement of an agreement by which Cammett concentrators are guaranteed free from infringement.
Ibid., Vol. XXV., (1905), p. 344. Digest of a description from Gluckauf, Vol. XLI., (1905), of the Esser concentrator.
Ibid., p. 401. Charles W. Comstock. A discussion of the principle of concentrating tables and their application in practice.
Ibid., p. 511. Description of the Campbell washer, a bumping table with curved riffles. The riffles are perforated so they act like miniature jigs. The idea is to do away with expensive sizing plants.
Min. Reporter, Vol. XLVIII., (1903), p. 540. Description of the Pinder concentrator.
Ibid., Vol. LI., (1905), p. 272. Description of the Dillon concentrator.
Ibid., Vol. LIII., (1906), p. 108. L. H. L. Huddart. Description of the Acme combined concentrating table. Abstracted from *Inst. Min. & Met.*
Ibid., Vol. LXVII., (1903), p. 518. A. R. Wilfley. Description of the Wilfley slimer.
Ibid., Vol. LXVIII., (1903), p. 258. Description of the Berrigan centrifugal separator.
Ibid., p. 357. Description of the Overstrom concentrator as manufactured by the Allis-Chalmers Company, Milwaukee, Wis.
Ibid., p. 436. Description and cut of the Acme concentrator.
Ibid., Vol. LV., (1907), p. 206. Description of the Akens and Evans slime concentrator.
Ibid., Vol. LVI., (1907), p. 498. Description of the Traylor concentrator.
Ibid., Vol. LXVII., (1908), p. 516. Description of the Card concentrator.
Min. & Sci. Press. Vol. LXXVIII., (1899), p. 85. Description of the Woodbury Imperial concentrator.
Ibid., p. 407. No author. Description of the Cammett concentrator.
Ibid., Vol. LXXXVI., (1903), p. 120. Description of the Brownell Frue vanner.
Ibid., Vol. LXXXVII., (1903), p. 202. A. R. Wilfley. Description of the Wilfley slimer.
Ibid., Vol. XCI., (1905), p. 260. Description of the Wilfley slimer.
Ibid., Vol. XCIV., (1907), p. 35. L. S. Austin. Description of the Deister concentrator in use at the Baltic mill, Michigan.
Ibid., p. 350. Description of the Akins and Evans slime concentrator.
Ibid., p. 600. Description of the Sherman slime concentrator, similar in design to the Wilfley slimer.
Ibid., Vol. XCV., (1907), p. 692. Description of the Traylor concentrator.
Min. World, Vol. XXIII., (1905), p. 415. W. S. Zehring. Description of the Wiswall pulsatory concentrator.
Ibid., Vol. XXIV., (1907), p. 338. Description of the Akens and Evans concentrator for slimes.
Ibid., Vol. XXVII., (1907), p. 979. Description of the Traylor concentrator.
Rev. de Metallurgie, Vol. IV., (1907), p. 598. Description and results obtained from the Acme concentrator.
Ibid., Vol. V., (1907), p. 105. Description of the Akens and Evans slime concentrator.
Sch. Mines Quart., Vol. XXII., (1901), p. 306. Henry S. Munroe. Description of a laboratory slime table.
Tech. Quart., Vol. XX., (1907), p. 453. Robert H. Richards. A very complete study of the Wilfley table, treating natural, sized, and classified feed.
Zeit. Berg-Hütt-u. Salinen-wesen, Vol. XLVII., (1899), p. 239. Hübner. A comparison of different circular slime tables.
Ibid., Vol. XLVIII., (1900), p. 141. No author. Description of the use of the Bartlett table in Germany.
Ibid., Vol. LIII., (1905), p. 126. General description of the Humboldt "Perfect Table" and class of material treated.
Ibid., Vol. LV., (1907), p. 129. Description of an adjustable round table.

BIBLIOGRAPHY FOR AMALGAMATION.

Am. Inst. Min. Eng., Vol. XXIX., (1899), p. 666. James Park. An article on cyaniding and amalgamation in New Zealand.

Berg. u. Hütt. Zeit., Vol. LIX., (1900), p. 121. C. T. Nissen. Gold amalgamation in mills in the southern Urals.

Can. Min. Inst., Vol. IV., (1901), p. 190. Courtenay DeKalb. Discussion of amalgamation inside the mortar.

Can. Min. Rev., Vol. XIX., (1900), p. 9. A. J. Clark. Discussion of silver plating. Abstracted from *Sch. Mines Quart.*, Vol. XXI., 1899.

Ibid., p. 11. B. C. Wilson. Discussion of gold loss caused by potassium cyanide on the plates. Abstracted from the *Min. Soc. of Nova Scotia*, Vol. V., Part II, (1899), p. 63.

Chem. Met. & Min. Soc. So. Africa, Vol. II., (1898), p. 295. J. J. MacDowell. Discussion of effect of temperature in amalgamation in South Africa.

Ibid., Vol. VIII., (1907), p. 30. Discussion of the principles of amalgamation.

Eng. & Min. Jour., Vol. LXV., (1898), p. 126. Thomas J. Grier. Discussion of the effect of temperature in amalgamation at the Homestake mines.

Ibid., Vol. LXVI., (1898), p. 370. Ernest W. Woakes. A remedy for hard amalgamation produced by fine gold.

Ibid., p. 423. Arthur L. Collins. Statement that fine, high-quality gold produces hard amalgam.

Ibid., Vol. LXIX., (1900), p. 499. No author. Description of a hydraulic amalgam squeezer for the Alaska Treadwell mill.

Ibid., Vol. LXX., (1900), p. 100. T. G. Davey. An article on the amalgamation of auriferous pyrites.

Ibid., Vol. LXXI., (1901), p. 330. James R. Cooper. Discussion of Halse's tests on the use of plain copper plates for amalgamation.

Ibid., Vol. LXXII., (1901), p. 108. A. C. Beatty. Description of an improved amalgamation process.

Ibid., p. 464. Edward Halse. Discussion of the use of copper plates for amalgamation.

Inst. Min. & Met., Vol. IX., (1900), p. 155. Edward Halse. Discussion of electroplated versus plain copper plates for amalgamation.

Ibid., Vol. XLVIII., (1903), p. 309. R. P. Hall. A suggestion for saving flour gold.

Ibid., Vol. LII., (1905), p. 80. Paul J. Johnston. Description of form of trap to save coarse gold in cyanide tailings.

Ibid., p. 186. Description of a new device for amalgamating gold in sands and pulps. Essentially a sluice box with zigzag metal riffles forming mercury pockets.

Ibid., Vol. LVI., (1907), p. 29. Description of the Lagarrigue Sutil amalgamator.

Min. & Sci. Press, Vol. LXXVIII., (1899), p. 206. H. S. C. An article on temperature of amalgamation.

Ibid., Vol. LXXIX., (1899), p. 8. N. S. Keith. An article on amalgamated plates.

Ibid., Vol. LXXX., (1900), p. 261. No author. An article on treating amalgam and retorting.

Ibid., Vol. LXXXIII., (1901), p. 130. H. S. Guess. Description of a laboratory amalgamating device.

Ibid., Vol. LXXXVII., (1903), p. 65. W. H. Kritzer. Directions for dressing amalgamated plates.

Ibid., Vol. XC.,(1905), p. 41. F. W. Cindel. Author seems to think that extra silver-coated amalgamating plates would increase the amount of gold amalgamated. Abstracted from *Chem. Met. & Min. Soc. So. Africa*, Vol. V., (1904), p. 92.

Ibid., p. 221. Description of the Pierce gold separator and amalgamator.

Ibid., p. 368. Algernon Del Mar. Discussion of plate amalgamation.

Ibid., Vol. XCI., (1905), p. 89. Algernon Del Mar. The article deals solely with the construction of an amalgamating table on which the plate rests and a crude tail box and mercury trap.

Ibid., Vol. XCII., (1906), p. 281. A. R. Parsons. Discussion in regard to the use of Muntz metal for amalgamation plates.

Ibid., Vol. XCIII., (1906), p. 379. Percy Morgan. The author advocates placing plates in separate room away from the battery. Arguments are given.

Ibid., Vol. XCIII., (1906), p. 534. J. R. Sears. The suggestion is made that the pulp flow sidewise rather than endwise over the amalgamation plates.

Ibid., p. 566. C. G. Dennis. The author noted that plates at a distance from the battery were not satisfactory, possibly due to the lack of wave motion produced by the mortar splash.

Ibid., Vol. XCV., (1907), p. 216. An article on the use and care of mercury.

Min. Soc. of Nova Scotia., Vol. V., (1899), p. 63. B. C. Wilson. Relation of use of cyanide on plates to loss of gold by solution.

New Zealand Mines Rec., Vol. VIII., (1905), p. 410. Description and use of amalgamation plates with side shake. Abstracted from the *South African Mines Jour.*
Pacific Miner., Vol. X., (1905). Brief illustrated description of an amalgamating machine. From *Min. Mag. Index.*
Sch. Mines Quart., Vol. XXI., (1899), p. 53. A. J. Clark. Discussion of silver-plated copper plates.
Sci. American, Vol. XCII., p. 148. Description of an improved amalgamator.
Sci. American Supp., Vol. LX., p. 25054. Leon de Mortillet. Description of amalgams in general, also description of amalgamation of copper plates for gold milling. Abstracted from *Rev. Chem. Ind.*

BIBLIOGRAPHY FOR MISCELLANEOUS PROCESSES OF SEPARATION.

Alaska Geol. Survey, (1898), p. 247. W. B. Phillips. An article on iron making in Alaska in 1898.
Am. Ceramic Soc., Vol. VIII., (1906), p. 244. C. F. Binns. Description of washing of clay.
Am. Electrochem. Soc., Vol. XI., (1907), p. 265. W. M. Johnson. General discussion of various types of electrostatic and electromagnetic separators now on the market.
Am. Inst. Min. Eng., Vol. XXXV., (1905), p. 928–947. H. O. Hofman and H. L. Norton. Description of apparatus and methods used, with results obtained, in roasting a blende-marcasite concentrate which after roasting was treated magnetically.
Am. Mfr., Vol. LXXIII., (1903), p. 550. Description of the Joplin Jack table — a magnetic separator.
Ann. des Mines, Vol. IV., (1899), p. 781. J. Henrotte. An article on the cement industry.
Aust. Mining Stand., Vol. XXIX., (1903), p. 597. F. B. Allen. Experiments with a dry, gold concentrator invented by C. W. Phillips.
Berg. u. Hütt. Jahrb., Vol. XLIX, (1901), p. 242. C. Blömeke. Description of a method of magnetically treating blende carrying barite.
Berg. u. Hütt. Zeit., Vol. LIX., (1900), p. 262. L. Kleritz and O. Bilharz. Description of der Schleuder separator.
Ibid., Vol. LXI., (1902), p. 53. Description of the Wenstrom separator at Grangesberg, Sweden. Details of sizes treated, capacity and results obtained.
Ibid., Vol. LXII., (1903), p. 118. Description of the Krupp Grusonwerk magnetic separator, also the Wetherill Magnetic separator.
Booklovers Magazine, (January, 1905). Illustrated article on the Burmese ruby mines and washeries.
Brass World and Platers Guide, Vol. III., (1907), p. 1. Recovery of metals from brass foundry skimmings.
Ibid., p. 55. Recovery of brass from machine shop chips.
Ibid., p. 219. Treatment of brass foundry and brass rolling mill refuse for recovery of metals.
Brit. Columbia Min. Exchange, (February, 1905). F. H. Claudet. A statement in defense of the Elmore process called forth by the annual report of the Le Roi mine No. 2. Ltd. Taken from *Min. Mag. Index.*
Brit. Columbia Standard, (May, 1905). Brief discussion of the suitability of the Elmore process for Slocan dry ores. From *Min. Mag. Index.*
Cal. Bull., No. 45. J. A. Edman. An article dealing with the black sands of California and their treatment.
Canadian Mines Bulletin. Fritz Cirkel. Complete description of the mining and milling of mica in Canada.
Can. Min. Inst., Vol. VII., (1904), p. 185. J. F. Hamilton. An article on the attraction of some of the common mills for residuum oil.
Ibid., Vol. X., (1907), p. 85. H. P. H. Brumell. Description of graphite dressing in Canada.
Can. Min. Jour., Vol. I., (1907), p. 79. Description of graphite dressing at the plant of the Diamond Graphite Company near Buckingham, Quebec.
Ibid., p. 163. Description of graphite dressing in Canada.
Ibid., p. 202. P. McM. Bennie. Description of the magnetic concentration of ores by the Gröndal process.
Ibid., p. 291. H. E. T. Hamilton. An article on corundum milling.
Can. Min. Rev., Vol. XIX., (1900), p. 266. C. M. Rolker. Description of the Elmore process. From *Inst. Min. & Met.*, Vol. VIII., (1900), p. 379.
Ibid., Vol. XXIV., (1905), p. 177. Article taken from the *Mining Standard* containing a letter from Mr. Elmore stating exact reason why the Elmore process failed in Rossland.
Ibid., Vol. XXV., (1905), p. 77. D. G. Kerr. Brief notes on the milling practice at the Canadian Corundum Company's mill.
Ibid., p. 123. Brief description of the milling of graphite at Port Elmsley, Ontario.

Ibid. Brief description of the methods of concentrating graphite at the mill of the Calumet Mining and Milling Graphite Company.
Ibid., Vol. XXVII., (1906), p. 152. D. G. Kerr. Description of corundum dressing in Renfrew County, Ontario, Canada. Abstracted from the *Inst. Min. & Met.*, Vol. XXX. (1905), p. 143.
Cassier's Mag., Vol. XIII., (1898), p. 433. Wm. A. Anthony. Concise comparison between the Wetherill and other magnetic machines.
Chem. Met. & Min. Soc. So. Africa, Vol. VII., (1907), p. 421. Description of the Elmore vacuum flotation process.
Clay Worker, Vol. XXI., (1899), p. 45. F. Lehmann. Description of process for removing impurities from clay.
Ibid., Vol. XXXIII., (1900), p. 360. A. M. Fish. Clay washing in Ohio for the removal of limestone pebbles.
Colo. Sch. Mines, VII., No. 4, (1905), p. 18. Richard H. Grider. Author discusses flumes, ditches, and pipes for conveying water; hydraulic giants, methods of making sluices, riffles, methods of cleaning up sluices, etc.
Ibid., Vol. III., No 1, (1907), p. 68. H. D. Ford. Illustrated description of Wetherill, Knowles, Ball-Norton, Wenstrom, and Blake-Morscher electric separators.
Ibid., p. 268. J. M. McClare. Discusses the principles of electrostatic separation.
Col. Sci. Soc., Vol. VIII., (1906), p. 88. W. G. Swart. Discusses electrostatic separation of copper ores.
Coll. Guard., Vol. LXXVII., (1899), p. 314. H. C. McNeill. Description of different forms of magnetic separators.
Ibid., p. 867. O. A. P. Srustedt. Description of a magnetic separator with no moving parts.
Ibid., Vol. LXXIX., (1900), p. 499. L. Kleritz and O. Bilharz. Description of a centrifugal separator. Taken from *Oest. Zeit.*, Vol. XLVIII., (1900), p. 121.
Ibid., Vol. LXXX., (1900), p. 187. H. Smits. Magnetic separation. Abstracted from *Bull. Soc. Ind. Min.*, Vol. III., XIV., (1900), p. 1243.
Comptes-Rendus, (1907), p. 304. M. Lenicque. Description of a magnetic separator.
Daily Consular and Trade Reports, No. 2408. (Nov. 9, 1905.) Consular Snodgrass of Pretoria. Results of Elmore oil process in diamond concentration at Premier Diamond Mining Company. Results were highly satisfactory.
Dinglers Polyt. Jour., Vol. CCCXXII., (1907), pp. 421, 438. Gustav Benfey. Preparation of clay.
Electrical Rev., (American), Vol. XXXVIII. Description of a patent for concentration by electricity.
Ibid., Vol. XLVI., p. 1023. A. M. Plomb. Brief description of the Blake-Morscher separator and a short article on the process. Abstract from *Mining Mag.*
L'Electricien, Vol. XXXI., (1906), pp. 100 and 120. Results obtained from the Wetherill magnetic separator.
Electro. & Met. Ind., Vol. V., (1907), p. 30. C. Blömeke. An article on magnetic separation.
Ibid., p. 83. General discussion of various types of electrostatic and electromagnetic separators now on the market.
Ibid., p. 134. Description of magnetic concentration of iron ores by the Gröndal process.
Ibid., p. 469. An article on electrostatic separation.
Electric World and Eng., (January, 1905). W. McA. Johnson. Brief description of the Blake-Morscher electrostatic separator. Taken from *Mining Mag. Index.*
Engineering, Vol. LXXXII., (1906), p. 260. Description of different flotation processes.
Eng. News, Vol. LIII., (1905), p. 196. Edwin Higgins, Jr. Description of method used in barite dressing.
Eng. & Min. Jour., Vol. LVIII., (1899), p. 245. T. C. Hopkins. Description on Kaolin washing, abstracted from *Mineral Ind.*
Ibid., Vol. LXVII., (1899), p. 503. O. A. P. Srufeldt. Description of a magnetic separator with no movable parts.
Ibid., Vol. LXVIII., (1899), p. 453. D. D. Wolff. Description of Waugh and Bignell dry concentration process.
Ibid., Vol. LXIX., (1900), p. 561. No author. Description of a steel bar riffle for gold slimes.
Ibid., pp. 732 and 742. No author. Description of Elmore concentration process. Abstracted from *Inst. Min. & Met.*
Ibid., Vol. LXX., (1900), p. 459. M. Smits. An abstract on the Wetherill magnetic separator.
Ibid., p. 578. No author. An article stating the Wetherill's patent is maintained in Germany.
Ibid., Vol. LXXI., (1901), p. 691. No author. An article stating the advantages of the Elmore process of oil concentration.
Ibid., p. 694. No author. Description of the Crown dry concentrating system.
Ibid., Vol. LXXII., (1901), p. 328. No author. Full description of the Waring system of magnetic separation.

Ibid., p. 602. W. R. Crane. Description of gypsum milling in Kansas.
Ibid., p. 710. W. B. Phillips. An article on the roasting temperature as regards the removal of iron from blende.
Ibid., Vol. LXXIV., (1902), p. 482. B. Dunstan. Description of the use of dry blowers in Australia gold practice. These do not prove suitable when earth is clayey.
Ibid., Vol. LXXV., (1903), p. 113, 262, and 292. McDermott. Description of the oil concentration of ores.
Ibid., p. 146. W. G. Swart. Description of the Blake-Morscher electrostatic separator.
Ibid., p. 713. Cloyd M. Chapman. Description of Edison dry process of separating gold from gravel.
Ibid., Vol. LXXVI., (1903), p. 349. S. W. Osgood. Description of magnetic separation processes.
Ibid., p. 970. Douglas McLean. Description of the Freid gravity dry separator.
Ibid., Vol. LXXIX., (1905), p. 590. A. Schwartz. Patent for increasing the efficiency of the oil concentration process by means of sulphur.
Ibid., p. 1036. Lucien I. Blake. Illustrated article on electrostatic separation with special reference to the Blake-Morscher separator.
Ibid., Vol. LXXX., (1905), p. 204. R. D. A. Johnson. Description of milling of phosphates in Tennessee. Costs given.
Ibid., p. 218. Description of the Blake magnetic separator.
Ibid., p. 253. Description of the Sutton-Steele electrostatic separator.
Ibid., p. 257. Editorial. An article on the Elmore oil process. Discussion of the principle and announcement of installation at the Premier diamond mines, where the capacity of the plant is 800 tons per day.
Ibid., p. 351. W. G. Swart. A good article on electrostatic separation.
Ibid., Vol. LXXX., (1905), p. 396. F. T. Snyder. Description of the Snyder magnetic separator made by the International Separator Co.
Ibid., p. 505. Description of a generator for electrostatic separators.
Ibid., p. 728. Robert B. Brinsmade. Description and plan of a marble mill, gives methods and tools used to cut and saw marble.
Ibid., Vol. LXXXI., (1906), p. 749. Description of Dings magnetic separator.
Ibid., p. 842. C. R. Böhm. Description of monazite sand washing in North and South Carolina.
Ibid., p. 893. R. C. Canby. Description of the Sutton-Steele dielectric separator.
Ibid., Vol. LXXXII., (1906), p. 581. C. T. Rice. Description of dry concentration at Manhattan, Nevada.
Ibid., p. 893. R. C. Canby. Description of the Sutton-Steele dry table.
Ibid., p. 1129. Description of the latest type of Ferraris magnetic separator.
Ibid., Vol. LXXXIII., (1907), p. 344. G. Haglund. The theory of the flotation process.
Ibid., p. 478. E. K. Judd. An article on dressing of manganese ores.
Ibid., p. 613. F. H. Trego. An article on roasting for magnetic concentration of zinc ores.
Ibid., p. 751. E. K. Judd. Description of barytes washing at the plant of the W. D. Gilman Company in Tennessee.
Ibid., p. 800. E. Walker. Description of the Elmore vacuum flotation process.
Ibid., pp. 908 and 1110. A. S. Elmore. Description of the Elmore vacuum flotation process.
Ibid., p. 996. E. K. Judd. Description of barite cleaning at the Ainslee plant at Long Island City.
Ibid., p. 1047. Description of the treatment of California black sands.
Ibid., p. 1205. F. H. Prentiss. Description of the Elmore vacuum oil process.
Ibid., Vol. LXXXIV., (1907), p. 112. Description of magnetic separation of tin oxide and wolfram.
Ibid., p. 251. F. Powell. Description of the Caribou riffle for saving of black sands.
Ibid., p. 441. Description of the Sutton-Steele dry table.
Ibid., p. 768. W. R. Ingalls. Description of Macquisten water flotation process.
Ibid., Vol. LXXXVIII., (1899), p. 550. Description of the Bromilow magnetic separator.
Ind. Min., Vol. VII., Ser. IV., (1907), p. 199. Description of the Elmore vacuum flotation process.
Ind. World, (1906), p. 908. D. G. Kerr. Description of corundum dressing in Renfrew County, Ontario, Canada. Abstracted from *Inst. Min. Eng.*
Inst. Min. Eng., Vol. XXIII., (1905), p. 446. Complete description of corundum milling at the Robillard property, North Renfrew County, Ontario, Canada.
Ibid., Vol. XXX., (1905), p. 143. D. G. Kerr. Description of corundum dressing in Renfrew County, Ontario, Canada.
Franklin Inst., Vol. CLX., (1905), p. 147. N. S. Keith. An article on roasting for magnetic separation, where an addition of 3 per cent. of finely ground coal was added to the charge.
Ibid., pp. 327-368. George Wetmore Colles. An article on the mica industry in general. Description of methods of splitting, sorting, cutting, and cleaning mica.

Genie Civil., Vol. XXXIV., (1899), p. 167. F. Schiff. Descriptions of magnetic separators.
Ibid., Vol. XLVII., p. 284. Illustrated description of a magnetic separator. Abstract from *Iron Age.*
Ibid., Vol. LI., (1907), p. 144. Description of Elmore vacuum flotation process.
Glückauf, Vol. XXXVI., (1900), p. 1039. Description of treatment of ores by the Wetherill magnetic separator.
Ibid., Vol. XLI., (1905), p. 1261. W. R. Ingalls. An article on the separation of a blende-galena-pyrite ore. Abstracted from *Eng. Min. Jour.*, Vol. LXXX., (1905), p. 289.
Iron Age, Vol. LXXV., (1905), p. 1974. Description of the Buchanan magnetic separator.
Ibid., Vol. LXXVI., (1905), p. 1367. Description of a separator. of the Ball-Norton type made by the Witherbee, Sherman Co., and used at Mineville, N. Y.
Iron & Coal Trades Rev., (1905). Brief illustrated description of the Forsgren electromagnetic concentrator for wet processes.
Iron Trade Rev., Vol. XXXVI., (1903), p. 64. Description of the Ding magnetic separator.
Ibid., Vol. XXXIX., (1906), p. 35. Some results obtained at Port Henry, N. Y., by a separator of the Ball-Norton type.
Iron & Steel Inst., Vol. LVI., (1899), p. 18. H. C. McNeill. Description of different forms of magnetic separators.
Ibid., p. 332. H. Wedding. Review of magnetic separation. An abstract from *Ver. Bef. Gewerbebefleisses*, (1899), p. 154.
Ibid., Vol. LXIII., (1903), p. 548. Description of the Fröding separator at Herräng. Abstracted from *Oest. Zeit.*, Vol. L., (1902), p. 560.
Ibid., Vol. LXVII., (1905), p. 556. E. Ferraris. Description of a magnetic separator used at Monteponi treating one-half ton of calcined ore per hour. Abstracted from *Rassegna Mineraria*, Vol. XXII., (1905), p. 168.
Ibid., Vol. LXXV., (1907), p. 340. An article giving some references to magnetic separation.
Inst. Min. & Met., Vol. XIV., (1904), p. 169. Description of the Blake-Morscher electrostatic separator.
Ibid., Vol. XVII., (1907), p. 137. A. Treloar and G. Johnson. An article on magnetic separation of tin oxide from wolfram.
Jern. Konterets Annuler, (1903), p. 251. Lengthy article describing magnetic concentrators. Description of the Ball-Norton, Monarch, Gröndal Nos. 1. 2, 3, Heberli, Fröding, Erikson, Forsgren, Wetherill cross-belt and Wetherill type VI. Mills are given.
Metallurgie, Vol. IV., (1907), p. 478. Description of the Elmore vacuum flotation process.
Ibid., pp. 522, 543. C. Gopner. An article giving the history of the various flotation processes up to the present time.
Ibid., Vol. IV., (1907), pp. 592 and 607. An article on electrostatic separation.
Min. Ind., Vol. VII., (1899), p. 150. T. C. Hopkins. An article on kaolin washing.
Mining Ind., Vol. IX., (1900), p. 107. Heinrich Ries. An article on clay washing.
Min. Jour., Vol. I., (1907), p. 524. Description of methods used for monazite sand cleaning in the Carolinas.
Ibid., Vol. LXXXI., (1907), p. 623. Description of the Elmore vacuum flotation process.
Ibid., Vol. LXXXII., (1907), p. 16. C. C. Longridge. Description of a magnetic separator for black sands.
Ibid., pp. 454, 490, 514, and 542. An article on magnetic separators in Cornwall.
Ibid., pp. 642 and 670. A. Treloar and G. Johnson. An article on the separation of tin oxide from wolfram. Abstracted from *Inst. Min. & Met.*
Min. Mag., Vol. XI., (1905), p. 515. A. M. Plomb. Illustrated description of the operation of the Blake-Morscher separator with table of results obtained on various ores.
Ibid., Vol. XIII., (1906), pp. 325 and 484. Description of the friction process of ore dressing.
Mines & Minerals, Vol. XXV., (1905), p. 299. Description of Blake-Morscher electrostatic separator.
Ibid., p. 299. Brief description of the Odling magnetic separator. Abstracted from *Australian Mining Standard*, Oct. 27, 1905.
Ibid., Vol. XXVI., (1905), p. 35. Pittman. Description of the salt cake process used at Broken Hill Proprietary mine. Tonnage results are also given of magnetic concentration at several mines. Digest of article in *Annual Report of Department of New South Wales*, 1904.
Ibid., p. 172. F. Julius. Description of methods used for separating fluorspar from lead and zinc.
Ibid., Vol. XXVII., (1907), p. 514. J. M. McClare. Description of an electrostatic separator.
Ibid., p. 563. Description of methods used in treatment of California black sand.
Ibid., Vol. XXVIII., (1907), p. 24. Description of the Elmore vacuum oil flotation process.
Ibid., p. 59. J. P. Rowe. Description of treatment of gypsum at mill near Armington, Montana.

Min. Reporter, Vol. LI., (1905), p. 144. Annual report of the Le Roi No. 2 Ltd. Description of treatment of Wilfley tails running $3.28 in gold, silver, and copper by the Elmore process. This special case was a failure, every dollar saved cost two dollars.
Ibid., Vol. LII., (1905), p. 494. Edward Laughton. General discussion of magnetic and flotation processes for concentration of zinc ores. Article taken from *Australian Mining Standard*.
Ibid., p. 589. M. G. Swart. A non-technical paper read before the El Paso meeting of the American Mining Congress — mentions flotation processes and deals with subject from an economic standpoint.
Ibid., Vol. LIV., (1906), p. 260. Description of dry concentration in Queensland and New South Wales, and Australia with a description of Draper's crushing and blowing machine.
Ibid., Vol. LV., (1907), p. 331. Description of a new German crushing mill with air separator.
Ibid., p. 397. Description of treatment of California black sand.
Ibid., p. 473. Description of magnetic concentration of iron ore by the Gröndal process.
Ibid., p. 533. Description of a new Australian shaking sluice.
Ibid., p. 537. Description of the Elmore vacuum flotation process.
Ibid., Vol. LVI., (1907), p. 241. Description of platinum washing in Russia.
Ibid., p. 331. A. Treloar and G. Johnson. Description of magnetic separation of tin oxide and wolfram. Abstract from *Inst. Min. & Met.*
Ibid., p. 357. Description of glass-sand washing in New Jersey.
Min. & Sci. Press, Vol. LXXXI., (1900), p. 40. Rolker. Description of the Elmore process. Abstract from *Inst. Min. & Met.*, Vol. VIII., (1900), p. 379.
Ibid., Vol. LXXXIV., (1902), p. 270. Historical article discussing origin of oil concentration in America.
Ibid., p. 348. Chas. M. Fassett. Description of oil concentration as applied to a highly siliceous ore carrying 15 to 20 oz. of silver, trace of gold, small quantities of antimony, copper, and lead, with eight to ten per cent. of pyrite. The ore concentrated from 18.8 oz. silver per ton to 169 oz. with the concentration ratio of about 11:1. The oil used was a heavy petroleum residue.
Ibid., Vol. LXXXV., (1902), p. 44. Application of Elmore process to ores of Rossland mining district.
Ibid., p. 126. The Wetherill separator has been very successfully applied at Kalk am Rhein, Germany, in the separation of ore containing galena, blende, and spathic iron. Capacities, etc., given.
Ibid., p. 207. The Elmore oil process on an ore from Rossland mining district gave 93 per cent. extraction.
Ibid., p. 340. An article on the use of the Wetherill separator at Washington, Arizona.
Ibid., Vol. LXXXVI., (1903), p. 118. Description of the salt cake process. Abstract from *Australian Mining Standard*.
Ibid., Vol. XC., (1905), p. 352. General brief description of methods employed by prospectors in concentrating gold by dry blowing.
Ibid., Vol. XCI., (1905), pp. 94 and 111. R. L. Grider. Article deals with pipe line, bed-rock sluices, riffles, dumps, clean-ups, and hydraulic elevators. Abstract from *Colo. Sch. Mines*, Vol. II., No. 4, (1905), p. 18.
Ibid., p. 307. Description of a form of magnetic separator. Abstract from *Iron Trade Rev.*, Vol. XXXVIII., No 37, (1905), p. 17.
Ibid., Vol. XCV., (1907), p. 314. Description of Ding's magnetic separator.
Mining World, Vol. XXIII., (1905), p. 99. Description of the Imperial magnetic ore separator.
Ibid., p. 177. Description of the Wetherill magnetic separator and the ores suited for its use.
Ibid., p. 646. Description of a magnetic separator made by the Carter Auto-magnetic Separator Company, N. Y.
Ibid., p. 661. Dr. J. Ohly. Description of a method of concentrating molybdenite by means of surface tension of hard water.
Ibid., Vol. XXIV., (1906), p. 470. An article on corundum dressing. Abstracted from the *U. S. G. S. Bulletin* 269.
Ibid., Vol. XXVI., (1907), p. 219. Description of magnetic separation. Abstract from *Canadian Zinc Report*, 1906.
Ibid., p. 360. Description of magnetic concentration of iron ore by the Gröndal process.
Ibid., p. 627. Description of graphite dressing in Canada.
Ibid., p. 630. J. F. Latimer. An article on the separation of graphite or molybdenite by oil and centrifugal force. Patent specification.
Ibid., p. 780. Treatment of California black sands.
Ibid., p. 782. Description of the Wilfley shaft furnace roaster.

Ibid., Vol. XXVII., (1907), p. 103. R. T. Clegg. Description of the Hedburg magnetic separator.
Ibid., p. 846. W. A. Root. Description of Macquisten water flotation process.
Ibid., Vol. XXVII., (1907), p. 883. F. C. Nicholas. Description of the Elmore process.
Ibid., p. 1001. Description of Macquisten water flotation process.
Ibid., pp. 1017 and 1130. An article on cleaning monazite in the Carolinas.
New Jersey Report, (1906). Description of the washing of glass-sand in New Jersey.
Nova Scotia Report, (1905), p. 69. Long article on the concentration of auriferous antimony ore.
New Zealand Mines Rec., Vol. VIII., (1905), p. 292. Description of an improved gold-saving appliance known as the "Dividend gold saver."
Oest. Zeit., Vol. XLVI., (1898), p. 147. C. Blömeke. Advantages of the Wetherill magnetic separator.
Ibid., p. 161. Comparison of the dry separators used in West Australia gold fields.
Ibid., p. 161. Description of the Lord and Banfield's dry concentrator.
Ibid., p. 182. Stefan Farbaky. Brief comparison between Wetherill machines and wet jigs.
Ibid., p. 347. E. Ferraris. Further details of the Monteponi separator described in *Oest. Zeit.*, Vol. XLV., (1897), p. 583, by O. Newburger.
Ibid., Vol. XLIX., (1901), p. 307. C. Blömeke. Description and table showing results of tests in oil concentration.
Ibid., Vol. L., (1902), p. 241. Description of the Fröding magnetic separator as used at Herräng, Sweden; gives power, capacity, and results accomplished.
Ibid., Vol. LIII., (1905), pp. 55 and 69. L. St. Rainer. A mathematical discussion of the behavior of placer material in sluice boxes. The author arrives at various formulæ which are of interest.
Ibid., p. 232. Friedrich Katzer. Brief description of the concentration of monazite sands.
Ibid., Vol. LIV., (1906), p. 209. Otto Witt. Description of the friction process of ore concentration.
Ibid., Vol. LV., (1907), p. 182. C. Bugge. Several general articles on various types of magnetic separators.
Ibid., p. 591. An article on electrostatic separation.
Ibid., p. 593. Martin Baldauf. Description of the method used at Redruth, Cornwall, to recover tin pellets from slag.
Ibid., p. 615. Description of the Elmore vacuum oil process.
Revue de Metallurgie, Vol. IV., (1907), p. 231. Description of the De Bavay flotation process Abstract from *Eng. Min. Jour.*, Vol. LXXXII., (1906), p. 344.
Ibid., p. 437. Description of the magnetic concentration of iron ores by the Gröndal process.
Ibid., p. 516. Description of barite washing at the plant of the W. D. Gilman Company, Tennessee.
Ibid., p. 559. An article on roasting of zinc ores for magnetic concentration.
Ibid., p. 598. Description of the Elmore vacuum flotation process.
Revista Minera. Aug. 25, 1905. M. G. Augustin. Brief description of the construction of a magnetic separator. From *Min. Mag. Index.*
Soc. Chem. Ind. Jour., (Sept. 20, 1902). Description of the Mechernich system of magnetic separation as applied to separating blende and siderite in the Upper Harz. Recovery was 98.5 per cent. of the zinc, the feed being 0.5 mm. in size.
Soc. Ind. Min., Vol. XIV., Ser. III., (1900), p. 1197. H. Wedding. Description of magnetic concentration.
Stahl u. Eisen, Vol. XX., (1900), p. 1186. H. Lunts. Description of magnetic separation.
Ibid., Vol. XXV., (1905), pp. 471 and 532. Dr. Weiskopf. Description of the following magnetic separators — Monarch, (Ball-Norton type), Gröndal, Forsgren, Heberli (wet), Fröding and Erikson. Table of results is given.
Ibid., p. 1296. Oskar Simmersback. Illustrated description of the Wenstrom, Ball-Norton, and Wetherill type E separators.
Ibid., Vol. XXVII., (1907), Part II., pp. 1485, 1536, and 1576. J. Kraus. Description of the method of preparing molding sand.
Thon Ind. Zeit., Vol. XXIV., (1900), p. 266. Dümmler. Description of the method of clay washing.
Ibid., p. 1826. J. W. Schamberger. An article on clay dressing.
Ibid., p. 1921. No author. Description of an air separator, similar to the Mumford and Moodie separator.
U. S. Consular Rep., No. 292, p. 305. Robert S. S. Bergh. Consul at Gottenberg, Sweden. Announcement of the Gröndal process — no details given.
U. S. Geol. Survey Bull., No. 269, pp. 99 and 160. An article on corundum dressing.
U. S. Geol. Survey Min. Resources, (1906), p. 1200. D. B. Sterrett. An article on the cleaning of monazite in the Carolinas.

Ver. Bef. Gewerbefleisses, (1899), p. 154. H. Wedding. An article on magnetic separation.
Western Chem. & Met., Vol. II., (1906), p. 116. J. M. McClare. Discussion of the electrostatic separator.
Zeit. Ver. Deut. Ing., (1905). Fr. Essen. Illustrated description of several magnetic separators of the Wetherill type.
Ibid., p. 500. E. Langguth. Discussion of the theory of magnetic separation, and conditions necessary to electromagnetic separation of ore.
Zeit. angewandte Chemie, (1899), p. 914. Witter. A history of magnetic separation.
Zeit. Berg-Hütt-u. Salinen-wesen, Vol. LIII., (1905), p. 125. Results obtained by the Mechernich electromagnetic separator.
Ibid., Vol. LIV., (1906), p. 278. Description of the Leuschner magnetic table separator.
Ibid., Vol. LV., (1907), p. 131. Description of the electromagnetic separator at the Eisenzicher Zug mine.
Zeit. Electrochemie, Vol. V., (1899), p. 413. No author. Description of a new Wetherill magnetic separator.
Ibid., Vol. VI., (1899), p. 321. E. Langguth. Development of magnetic separation, and magnetic properties of minerals.

BIBLIOGRAPHY FOR ACCESSORY APPARATUS.

Am. Inst. Min. Eng., Vol. X., p. 265. W. Peck. Description of Peck's centrifugal elevator as used on gold dredges.
Am. Mfr., Vol. LXV., (1899), p. 545. No author. Description of Robins belt conveyor.
Am. Inst. Min. Eng., Vol. VIII., (1902), p. 92. H. W. Moss. Description of method of sampling adopted by Broken Hill Proprietary Company, Port Pirie, Australia.
Berg. u. Hütt. Zeit., Vol. LIX., (1900), p. 85. C. Blömeke. Description of the Groppel automatic feeder for mills.
Can. Min. Rev., Vol. XVII., (1898), p. 43. F. T. Snyder. Description of a new sampler at Keewatin, Ontario.
Ibid., Vol. XIX., (1900), p. 63. S. H. Pearce. Article on mill sampling. Abstract from *Chem. Met. & Min. Soc., So. Africa.*
Chem. Met. & Min. Soc., So. Africa, Vol. VII., (1906), p. 292. G. A. Swart. Description of some accessory stamp mill appliances.
Ibid., p. 389. Description of a method of cleaning conveyor belts.
Ibid., Vol. VIII., (1907), pp. 42, 85. D. J. Pepler. Description of Pepler's operative device for Challenge feeder.
Chem. Trade Jour., (March 10, 1900), p. 172. No author. Description of Geissler's sampling apparatus.
Coll. Guard., Vol. LXXIX., (1900), p. 462. Description of Geissler's sampler. Abstract from *Oest. Zeit.*, Vol. XLVIII., (1900), p. 107.
Eng. & Min. Jour., Vol. LXV., (1898), p. 553. Description of the Frenier and LeBlanc spiral sand pump.
Ibid., Vol. LXVII., (1899), p. 236. No author. Description of the sand wheel of the Henry Nourse Gold Mining Company, Transvaal.
Ibid., Vol. LXIX., (1900), p. 113. No author. Description of the Geissler sampler. Abstract from the *Chemiker Zeitung*, (1900).
Ibid., p. 436. No author. Description of a clean-up trolley for a gold mill.
Ibid., Vol. LXX., (1900), p. 549. No author. Description of the Snyder sampler.
Ibid., Vol. LXXII., (1901), p. 722. No author. Article on Robins belt conveyor in stamp mills.
Ibid., Vol. LXXIII., (1902), p. 184. Note on a conveyor used at Oroville, California, which is 75 feet long, 28 inches wide, travels 250 feet per minute up an incline of 18° with a capacity of 75 cubic yards per hour.
Ibid., p. 488. Description of the Byrne automatic pulp sampling machine.
Ibid., p. 514. Paul Johnson. Description of the Johnson automatic sampler.
Ibid., Vol. LXXVI., (1903), p. 622. C. O. Bartlett. Description of ore dryers. Abstract of a paper read at the American Mining Congress, Deadville, S. D.
Ibid., p. 778. Description of the Aultman new coal conveyor.
Ibid., Vol. LXXVII., (1904), p. 236. Description of the Wilfley elevator.
Ibid., Vol. LXXX., (1905), p. 1119. Thos. T. Reed. An article on the movement of coarse sands in launders.
Ibid., Vol. LXXXII., (1906), p. 248. Description of the Fleming dewatering wheel as used at the Daly Judge Mill, Park City, Utah.
Ibid., p. 743. A. H. Wethey. Description of a device for removal of wood before feeding ore to breakers.
Ibid., Vol. LXXXIII., (1907), p. 282. Description of a method of cleaning conveyor belts.

Ibid., p. 471. G. O. Smart. Description of some accessory stamp mill appliances. Abstract from *Chem. Met. & Min. Soc., So. Africa*, Vol. VII., (1906), p. 133.
Ibid., p. 560. E. S. Ward. Details are given regarding elevators.
Ibid., p. 727. H. F. Durant. An article on the storage of tailings for future use.
Ibid., p. 856. Description of a dust-settling device.
Ibid., Vol. LXXXIV., 1907, p. 536. F. K. Blue. An article dealing with the flow of water carrying sand in suspension. Deals with launder design.
Ibid., p. 1085. Description of Brunton man elevator.
Génie civil, Vol. XLIII., 1907, p. 203. Description of an apparatus for settling dust from air. Abstracted from *La Revue Noire*, No. 245. (1906.)
Inst. Min. & Met., Vol. XVI., 1906, p. 51. Thomas White. Description of a dust-settling apparatus.
Mines & Minerals, Vol. XXVIII., 1908, p. 199. Description of a shovel-wheel unwaterer.
Min. Reporter, Vol. XLV., 1902, p. 119. The weaknesses of the Bridgeman sampler are 1. lack of "mixing" between the cuts, 2. the variability in weight of the samples obtained.
Ibid., p. 206. An article showing that the pipe and single split samplers are inaccurate and unreliable.
Ibid., p. 249. An article showing the inaccuracies of the old Brunton samplers.
Ibid., p. 272. Description of the new Brunton sampler, one of the few devices giving an accurate sample.
Ibid., p. 272. An article showing the deficiencies of the Overstrom sampler.
Ibid., p. 337. Description of the Vezin sampler, which shares with the new Brunton the distinction of being a standard sampler. This sampler gives excellent results and is preferred by many to the Brunton.
Ibid., Vol. XLVI., 1902, p. 482. Description of sampling methods at Park City, Utah, Sampling Works.
Ibid., Vol. LII., 1905, p. 516. Paul J. Johnson. Description and illustration of an improved swing ore feeder.
Ibid., Vol. LIV., 1906, p. 83. Description of the Hoseur ore feeder. Abstract from *Mining Journal*, Vol. LXXIX., 1906, p. 849.
Ibid., p. 306. H. J. Baron. Description of the Fitzgerald dewatering screen, used at the Humphrey mill, Creede, Colorado.
Ibid., p. 423. Some notes on sampling.
Ibid., Vol. LVI., 1907, p. 175. Patent specifications of a combined ore crusher, pulverizer, retort, and bullion separator.
Ibid., p. 445. D. J. Pepler. Description of Pepler ore feeder.
Min. & Sci. Press, Vol. LXXVI., 1898, pp. 107 and 109. C. P. Stanford and A. B. Paul. Description of the first stamps.
Ibid., Vol. LXXVII., 1898, p. 101. Description of the James automatic ore feeder, taken from trade catalogue.
Ibid., p. 482. L. H. Lavenstein. Description of a spokeless tailings wheel. Abstract from *S. African Mining Jour.*
Ibid., Vol. LXXIX., 1899, p. 256. L. Ehrmann. An article on sampling and analyzing slimes.
Ibid., pp. 516 and 549. S. H. Pearce. An article on mill sampling.
Ibid., Vol. LXXXII., 1901, p. 242. Description of the Jeffrey Century belt conveyor for handling ore.
Ibid., Vol. LXXXIII., 1901, p. 47. Description of the Robins belt conveyor at the British Columbia Copper Company.
Ibid., p. 55. S. I. Hallett. Description of an automatic sampler at the Smuggler mills, Aspen, Colorado.
Ibid., Vol. LXXXIX., 1920, p. 337. Description of the Foster-Coolidge automatic sampling machine.
Ibid., Vol. XCI., 1905, p. 274. A. W. Warwick. An article on hand sorting in small mills.
Ibid., p. 294. J. C. Bailor. An article on the sampling of products of concentrating and slime tables.
Ibid., Vol. XCIV., 1907, p. 304. W. R. Crane. Detail drawings of the ore bins at the Wolverine mine, Lake Superior.
Ibid., Vol. XCV., 1907, p. 337. Description of the method used for the disposal of tailings at the No. 6. concentrator of the Arizona Copper Company.
Ibid., p. 368. Description of the method of disposal of tailings at Kalgoorlie, Australia.
Ibid., p. 459. Description of the method of disposal of tailings at Broken Hill, Australia.
Ibid., p. 789. Description of the Richardson automatic weighing conveyor.
Mining World., Vol. XXI., (1905), p. 216. Description of the Calumet & Hecla sand wheel.
Ibid., Vol. XXIII., (1905), p. 439. J. C. Bailor. A method of sampling pulp and concentrates from slime tables. Abstract from *West. Chem. & Met.*

Ibid., Vol. XXVI., (1907), p. 185. G. O. Swart. Description of accessory stamp mill appliances. Abstract from the *Chem. Met. & Min. Soc., So. Africa*, Vol. VII., (1906), p. 133.
Oest. Zeit., Vol. XLVIII., (1900), p. 107. No author. Description of the Geissler sampler.
Ibid., Vol. LIII., pp. 55 and 69. L. St. Rainer. A mathematical discussion of the mechanics and behavior of gold and sand moving under the influence of water in sluice boxes.
Revue de Mines, Vol. XX., Ser. IV., (1907), p. 283. M. Dekeyser and G. Verbeke. Description of a combined crushing, amalgamating, and cyaniding machine.
Sci. American, Vol. XCIII., p. 136. Enos Brown. Description of a five step centrifugal pump used in Oregon to raise water necessary to operate hydraulic giants in placer ground.
So. Afr. Min. Jour., Vol. VIII., (1899), p. 893. Description of the Robins conveyor belt.
Thon Ind. Zeit., Vol. XXIV., (1900), p. 1057. Discussion of millstones.
Zeit. Berg-Hütt-u. Salinen-wesen, Vol. LV., (1907), p. 193. General articles on sampling.

BIBLIOGRAPHY FOR PRINCIPLES AND OUTLINES OF MILLS.

Am. Inst. Min. Eng., Vol. XXVIII., (1898), p. 553. W. J. Loring. Detailed account of stamp mill practice at the Utica mill, Calaveras County, California.
Ibid., Vol. XXIX., (1899), p. 3. C. W. Purington. Description of the platinum deposits of the Ural Mts., Russia.
Ibid., p. 488. S. H. Loram. Description of the mill of the Atacama Mineral Company, Taltal, Chili.
Ibid., Vol. XXXI., (1901), p. 446. H. T. Collins. Cheap gold milling in Mexico.
Ibid., p. 617. Wm. H. Radford. Figures on the cost of hydraulic mining in low grade gravels in Northern California.
Ibid., Vol. XXXI., (1901), p. 817. John Hays Hammond. Description of milling in the Transvaal.
Ibid., Vol. XXXII., (1902), p. 484. M. Bustemente. Attention is called to the difficulty of extracting the gold from Mexican ores composed principally of iron pyrites much decomposed in a quartz matrix.
Ibid., Vol. XXXIII., (1903), p. 256. J. R. Finlay. General milling practice at the Standard mill, Cœur d'Alene, Idaho.
Ibid., p. 138. W. E. Thorne. Method of hydraulicking at the Gold Bug Mine, Georgetown, Colo. Statement given of working cost.
Ibid., p. 528. Thomas H. Woods, G. D. Doveton. Description of the Camp Bird Mill, Ouray, Colorado.
Ibid., Vol. XXXIV., (1904), p. 334. R. A. Kinzie. Complete description of the Alaska-Treadwell mill.
Ibid., p. 722. T. L. Watson. Description of method of concentrating Virginia zinc ores.
Ibid., Vol. XXXV., (1905), p. 587. C. H. Fulton. Crushing in cyanide solution as practiced in the Black Hill, So. Dakota.
Ibid., Vol. XXXVII., (1906), p. 440. L. S. Austin. Description of the Washoe plant of the Anaconda Copper Company.
Ibid., Vol. XXXVIII., (1907), p. 285. Arthur Winslow. Description of the Liberty Bell mill, Telluride, Colo.
Ibid., p. 249. E. R. Woakes. Description of the Espiritu Santo mill, Cana, Darien.
Am. Mfr., Vol. LXXVI., (1905), p. 253. Brief description of hydraulic mining by the Consolidated Caribou Hydraulic Mining Co., in British Columbia.
Am. Mining Congress, Vol. VII., Part II., (1904), p. 80. F. H. Probert. Concentration of copper ores in the southwest, deals with the Morenci and Clifton mills in Graham County, Arizona. Detailed description of the West Yankee, Shannon, and Longfellow concentrators.
Ann. des Mines, Vol. VII., Ser. X., (1905), p. 555. Brief description of concentrating a 4.5 per cent. copper ore at Moonta, South Australia. Jigs, buddles, and Wilfley tables are used.
Ibid., Vol. XI., Ser. X., (1907), p. 607. Description of diamond washing by the De Beers Company, So. Africa.
Ibid., Vol. XV., (1899), p. 5. M. D. Levat. Black phosphates of the Pyrenees.
Ibid., Vol. XVI., Ser. IX., (1899), p. 5. L. De Launay. Ancient milling at Laurium, Greece.
Ibid., Vol. XVII., Ser. IX., (1900), p. 254. J. Jordan. Notes on British Columbia mills.
Ibid., Vol. XIX., (1901), p. 186. Maurice Frochot. Description of a Bolivian tin-dressing mill.
Ibid., Vol. XIX., Ser. II., (1901), pp. 213 and 216. Maurice Frochot. Description of tin-dressing methods of Bolivia.
Argosy, (Feb. 25, 1905). F. W. Luick. Description of hydraulic mining at Omar mine on the Essequito River, British Guiana.

Aust. Inst. Min. Eng., Vol. VIII., (1902), p. 51. Use of hydraulic separators at Kalgoorlie Gold Mines, Ltd., Australia.
Ibid., p. 236. H. C. Boydell. Complete description of gold-milling practice in Bendigo.
Ibid., Vol. X., (1905), p. 197. V. F. S. Low. Description of methods employed in concentrating silver lead ores in Australia. Flow sheet and details given.
Ibid., p. 289. D. K. Blair. Reasons for failure of gold-dredging operations in New South Wales.
Ibid., Vol. XI., (1906), p. 164. V. F. S. Low. Concentration of silver lead ores at the Block 10 mill, Broken Hill, New South Wales.
Austr. Min. Standard., Vol. XXVIII., (1903), p. 265. Description of magnetic separation at Broken Hill, Australia.
Ibid., p. 439. Tin dredging has been tried at Copes Creek, New South Wales, but bad management coupled with ignorance of suitable appliances have rendered attempts unsuccessful.
Ibid., p. 924. A recent installation at Copes Creek, New South Wales, for tin dredging has a successful four months' run.
Ibid., Vol. XXIX., (1903), p. 432. D. Clarke. Outline of the Mount Bischof concentrating plant.
Berg. u. Hütt. Jahrb., Vol. L., (1905), p. 255. L. St. Rainer. Description of platinum washing in the Urals.
Ibid., Vol. LIII., (1905), pp. 85–204. J. Bauer. Description on p. 153 of a stamp mill at Guiabarza, Hungary.
Berg. u. Hütt. Zeit., Vol. XLVI., (1898), p. 357. C. Blömeke. Description of German mills.
Ibid., Vol. LXI., (1902), p. 525. O. M. Bilharz. Description of treatment of dolomitic limestone impregnated with galena and small amounts of pyrite and chalcopyrite in St. Francois County, Mo. Bartlett tables are used in the treatment.
British Columbia Min. Rev., (Jan., 1905). Description in brief of the following British Columbia mills. Le Roi No. 2, Vilbert, Portland, White Bear and Rossland Power Company.
Ibid., (Sept., 1905.) Brief description of tests made at Dawson of a new process for treating Black sands.
British Soc. Min. Students, Vol. XXI., (1899), p. 87. W. H. Mungall. Description of diamond washing in South Africa.
California Mines Assoc., (1905), p. 117. N. H. Storms. Suggestions for milling California gold ores.
Can. Geol. Survey. R. Bell. Bulletin on preliminary report on Rossland, B. C. Concentration at Rossland, B. C.
Ibid. Fritz Cirkel. Bulletin for 1905 describing in detail mining and milling of asbestos in Canada.
Can. Min. Jour., Vol. I., (1907), p. 47. H. J. C. Williams. Description of a copper sulphide mill at Bruce, Ontario. Abstract from *Can. Min. Inst.*
Ibid., p. 55. Fritz Cirkel. Description of magnetic separation at Port Henry, N. Y.
Ibid., p. 207. E. P. Brown. Complete description of stamp milling in Nova Scotia.
Ibid., p. 276. Concentration of ores of Cobalt, Ontario, with special reference to the Coniagas mill.
Can. Min. Inst., Vol. III., (1900), p. 3. S. S. Fowler. Description of Yuir gold stamp mill.
Ibid., Vol. IV., (1901), p. 83. E. N. Fell. Gold milling practice at the Athabasca mine British Columbia.
Ibid., p. 113. P. Kirkegaard. Description of treatment of auriferous mispickel ores at Deloro, Ontario.
Ibid., p. 254. W. M. Edwards. Complete tree of the Helena-Frisco mill, Gem, Idaho.
Ibid., Vol. IX., (1906), p. 35. W. H. Edwards. Concentration of chrome ore in Quebec.
Can. Min. Rev., Vol. XVIII., (1899), p. 15. B. McDonald. Description of new mining plant at Salmon River, Nova Scotia.
Ibid., p. 261. Isaac Cowie. Description of gold dredging on the Saskatchewan.
Ibid., Vol. XX., (1901), p. 176. Description of gold dredging in New South Wales.
Ibid., Vol. XXI., (1902), p. 59. Notes on gold dredging on the Saskatchewan. This promises to become a successful industry.
Ibid., p. 254. S. S. Fowler. For concentrating of the silver-lead ores of the Slocan district, British Columbia; hand sorting and close sizing is recommended.
Ibid., p. 274. D. K. Blair. Description of the construction and operation of gold dredges together with accidents to which the various parts are liable; their cause, effect, and remedy.
Ibid., Vol. XXII., (1903), p. 11. E. R. Woakes. Description of a modern coarse concentration plant for silver and lead ore in the Kootenay district, British Columbia.
Ibid., p. 35. R. L. Montague. Comparison of different dredges as to capacity, horse-power, and costs.

Id., Vol. XXIV., (1905), p. 173. Description of placer mining in Yukon, past, present, and future.
Id., Vol. XXV., (1905), p. 54. Description of the Hendryx cyanide process at Nelson, British Columbia.
Id., p. 151. Fritz Cirkel. Asbestos mining and milling in Quebec. Abstract from *Bull. Can. Geol. Survey.*, 1905.
Id., Vol. XXVI., (1906), p. 9. A. W. Dwyer. Description of lead and zinc concentration at Roseberry, British Columbia.
assier's Mag., Vol. XVI., (1899), p. 39. A. W. Robinson. Panning and hydraulicking in gold dredging.
bid., Vol. XVIII., (1900), p. 480. A. W. Robinson. How to make gold dredging pay.
bid., Vol. XXIII., (1903), p. 491. W. H. Booth. Description of gold milling in Wales.
bid., Vol. XXIX., (1906), p. 132. B. Cunningham. Illustrated description of dredges of the grab and suction types.
hem. Met. & Min. Soc., So. Africa, Vol. III., (1903), p 238. E. D. Chester. Gold milling practice on the Witwatersrand.
bid., Vol. VI., (1905), p. 63. H. J. Brooke. Description of the dry crushing plant on the Associated Northern Blocks, Kalgoorlie.
bid., Vol. VII., (1906), p. 133. G. O. Swart. Notes on the mill of the Simmer and Jack Proprietary Mines, So. Africa.
Ibid., p. 379. Modern gold milling. Many valuable details are given.
Ibid., Vol. VIII., (1907), p. 167. H. D. Griffiths. Complete description of tin mining and concentration in Cape Colony.
Coll. Guard., Vol. LXXVII., (1899), p. 673. C. W. Purington. Description of the platinum deposits of the Urals. Abstract from *Am. Inst. Min. Eng.*, Feb. 1899.
Ibid., Vol. LXXX., (1900), p. 749. N. Pellati. Description of ore dressing in Sardinia. Abstract from *Bull. Soc. Ind. Min.*, Vol. XIV., Ser. III., (1900), p. 1263.
Ibid., p. 1259. Description of the Wetherill plant at Lohmannsfeld. Abstract from *Stahl u. Eisen.*
Ibid., p. 1354. J. H. D. James. An article on tin washing.
Colo. Sch. Mines., Vol. II., No. IV., (1905), p. 18. R. L. Grider. Brief description of best methods for working gravel deposits for gold by hydraulicking. There is given method of building pipe lines, sluices, etc.
Ibid., Vol. II., No. IV., (1905), p. 38. W. I. Spencer. Description of the Daly West mill.
Ibid., Vol. III., (1906), p. 138. H. R. Van Wagenen. Description of method used in concentration of tungsten ores of San Juan County, Colorado.
Ibid., p. 189. C. W. Goodale. Description of concentration at Butte, Montana.
Ibid., p. 229. H. C. Parmalee. General description of present day ore dressing practice in Colorado.
Ibid., Vol. IV., (1907), p. 31. P. A. Gow, A. M. Hobart, G. S. Kruger, and F. H. Parsons. Description of Daly Judge mine and mill.
Commissioners Report on the Zinc Resources of British Columbia, Can. Geol. Survey. Rather complete information regarding the concentration of zinc ores.
Comptes-Rendus, 1903, p. 131. M. H. Lenicque. Abstract on the actual state and recent progress of the mechanical preparation and concentration of minerals.
Electrical Rev., (American), Vol. XLVII., pp. 27 and 862. Fritz Cirkel. Asbestos, its occurrence, exploitation, and uses. Abstract from *Report to Supt. of Mines, Department of Canada.*
Electrochem. & Met. Ind., Vol. V., (1907), p. 14. G. P. Scholl. Many details are given regarding modern gold milling.
Ibid., p. 62. Detailed description of gold milling in Western Australia.
Ibid., p. 320. Description of acid flotation process at Broken Hill, Australia.
Ibid., p. 473. Description of Lyon Mountain magnetic mill.
Engineer, Vol. XCV., (1902), p. 216. Description oil concentration at the Elmore plant, London, England.
Eng. Mag., Vol. XV., (1898), p. 401. H. H. Webb and Pope Yeatman. Description of the milling of gold ores on the Witwatersrand.
Ibid., Vol. XIX., (1900), p. 543. H. M. Lamb. History and progress of mining in British Columbia.
Ibid., p. 809. T. Tonge. Description of the Leadville mining district.
Ibid., Vol. XXI., (1901), p. 405. A. G. Charleton. Description of the Lake View mill, West Australia.
Ibid., Vol. XXII., (1901), p. 398. C. W. Purington and J. B. Landfield, Jr. Description of dredging in Western Siberia.
Ibid., Vol. XXVIII., (1905), p. 779. William Maude. Mining and hydraulic engineering in Brazil. Description of installation of pipe line for hydraulicking operations.

Ibid., Vol. XXIX., (1905), p. 481. Alex. Del Mar. Costs of operating and profits of dredging operations.
Ibid., Vol. XXXIV., (1907), p. 68. E. S. Regelman. An article on asbestos milling.
Eng. & Min. Jour., Vol. LXV., (1898), p. 569. F. L. Bartlett. Brief description of milling plant for small mines.
Ibid., Vol. LXVI., (1898), p. 100. H. Tweddle. Description of the Lay system of placer working in Guiana.
Ibid., p. 789. W. S. Yates. Description of an old time Georgia stamp mill.
Ibid., Vol. LXVII., (1899), p. 175. The Conrey Placer Mining Company.
Ibid., Vol. LXVII., (1899), p. 383. Description of two new stamp mills.
Ibid., pp. 503, 535, 642, and 840. Capt. C. C. Longridge. A long and elaborate article on river dredging.
Ibid., p. 529. Frank Owen. Description of gold dredging in Venezuela.
Ibid., Vol. LXVIII., (1899), p. 8. A. H. Wethey. Description of improvements in concentration made in Butte.
Ibid., pp. 34 and 192. Capt. C. C. Longridge. Complete articles on gold dredging.
Ibid., p. 65. Description of dredging with a Hammond dredge.
Ibid., p. 70. N. J. Fleck. An article on concentration of fine gold.
Ibid., p. 102. J. W. Pinder. Best methods for working placer ground.
Ibid., p. 185. Gold dredging, the most profitable industry in New Zealand.
Ibid., p. 278. G. W. Riter. Consumption of water at the Eureka Hill mill.
Ibid., p. 541. Editorial. Description of gold dredging at Alexandra, New Zealand.
Ibid., p. 545. H. L. J. Warren. Description of the Silver King mill, Park City, Utah.
Ibid., p. 669. Power plants for dredging.
Ibid., Vol. LXIX., (1900), p. 348. F. D. Smith. Description of the Montana and Denver Reduction Company's mill.
Ibid., p. 375. G. W. Winter. Description of the Peck Montana concentrating mill. Use is made of Peck's centrifugal machinery.
Ibid., p. 473. L. H. Hardenburgh. An article on the concentration of Lake Superior iron ore.
Ibid., p. 555. Gold dredging in Borneo.
Ibid., p. 587. Alexander Hill. Description of the mines of the Ray Copper Company, Kelvin, Arizona.
Ibid., p. 623. Description of the Hammond dredge, which is mounted on rollers for use on the Nome beach.
Ibid., p. 648. Description of the mill of the Missouri Zinc and Lead Company.
Ibid., p. 707. H. B. Layton. Brief summary of a new concentrating mill at Nacosari, Mexico.
Ibid., p. 770. Description of the Pennsylvania mill at Grass Valley, California.
Ibid., Vol. LXX., (1900), pp. 35 and 67. Chas. Tappan. Description of placer mining in the southern Urals.
Ibid., p. 37. Robert Nye. An article on the testing of placer deposits.
Ibid., p. 41. H. Wedding. Magnetic separation of iron ores. Abstract from *Bull. Ind. Min.*, Vol. XIV., (1900), p. 1197.
Ibid., p. 98. H. A. Titcomb. Description of concentration in the Kansas-Missouri zinc district.
Ibid., pp. 128, 161, and 190. P. G. Morgan. An article on dredging.
Ibid., p. 216. W. C. Wyrkoop. Description of gold mining at Cochiti, New Mexico.
Ibid., p. 318. Article on dredging in Idaho.
Ibid., p. 395. F. Powell. Article on gold dredging on Snake River, Idaho.
Ibid., p. 638. Description of a gold mill at Republic, Washington.
Ibid., p. 698. G. D. Rice. Description of placer mining in the Philippines.
Ibid., Vol. LXXI., (1901), p. 785. G. P. Grimsley. Description of gold dredging in Nome, Alaska.
Ibid., p. 813. G. P. Grimsley. Detailed account of gold dredging in California.
Ibid., p. 836. Treatment of tailings at Tintic, Utah, by oil concentration.
Ibid., Vol. LXXII., (1901), p. 5. Peter S. Mussigbrod. Description of a canvas table plant at Garnet, Montana.
Ibid., pp. 11 and 40. G. P. Grimsley. Detailed account of gold dredging in California.
Ibid., p. 64. Henry V. Maxwell. Description of the Crown Mountain gold mill, Georgia.
Ibid., p. 480. Description of the Morro Velho stamp mill, Brazil.
Ibid., p. 632. Hydraulic power for dredges. Abstract from *New Zealand Mines Record.*
Ibid., p. 703. Preliminary statement regarding the Chainman mill, Ely, Nevada.
Ibid., Vol. LXXIII., (1902), p. 132. R. T. Hill. An article on the placers of La Cienaga, Sonora, Mexico.
Ibid., p. 241. Robert Bell. Dredging on the Snake River where 95 per cent. of the gold has been recovered. Successful use of a suction dredge at less cost than bucket dredge.

Ibid., p. 311. Description of the plant of the Anaconda Copper Mining Company.
Ibid., p. 468. Improvements in Lake Superior ore-dressing practice.
Ibid., Vol. LXXIV., (1902), p. 178. Edward S. Kewes. Complete description of tin-dressing practices in Cornwall, England.
Ibid., p. 216. W. R. Lewis. Description of modern tin-dressing plants in Cornwall, England.
Ibid., p. 217. Description of the separation of zinc blende from mixed sulphide ores, carried out at the Colorado Zinc Company's works at Denver, Colo.
Ibid., p. 680. Description of a late type of bucket dredge in use in New Zealand.
Ibid., Vol. LXXV., (1903), p. 87. J. R. Finlay. Description of milling practices in Cœur d'Alene, Idaho.
Ibid., p. 411. Account of dredge built by the Western Engineering & Construction Company of San Francisco for the Atlin district in British Columbia.
Ibid., p. 670. A. W Robinson. Description of a dredge built for the Stewart River district, Yukon, Alaska.
Ibid., Vol. LXXVI., (1903), p. 318. Description of dredging in the Oroville district, California.
Ibid., p. 388. M. Schwerin. Description of concentration at Anaconda.
Ibid., p. 392. G. A. Burr. Description of the mills of the Montezuma Lead Company and Minas Tecolotes y Anexas, Santa Barbara, Mexico.
Ibid., p. 424. Edward S. Kewes. Magnetic separation of pyrite, wolframite, and cassiterite, at Tanear River, between Cornwall and Devon.
Ibid., p. 463. Martin Schwerin. Description of the concentration plant at La Cananea.
Ibid., p. 659. Description of the Alaska-Treadwell mills.
Ibid., Vol. LXXIX., (1905), p. 269. C. W. Purington. Costs and methods of mining of gravel in Alaska. Abstract from *Report of U. S. Geol. Survey.*
Ibid., p. 362. Brief description of hydraulic mining methods at the Orleans Bar Gold Mining Company, Humboldt County, California.
Ibid., p. 470. Sidney Fawns. Description of tin dressing at Mt. Bischof tin mine.
Ibid., p. 850. Stephen L. Goodale. Illustrated article describing milling practice at the Camp Bird Mill.
Ibid., p. 895. L. J. Hohl. Discussion of causes of delays in dredging operations, capacity of different types of dredges, costs, etc. Abstract from California Mines Assoc., Dec., 1904.
Ibid., p. 994. F. F. Sharpless. Description of placer mining in Antioquia, Columbia.
Ibid., pp. 1088, 1224. Frank H. Probert. Figures on concentration of low grade copper ores at Morenzi and Clifton, Arizona. Abstract from *Trans. Seventh Am. Min. Congress.*
Ibid., Vol. LXXX., (1905), p. 4. Harry J. Brookes. Description of the dry crushing plant on the Associated Northern Blocks, Kalgoorlie. Abstract from *Chem. Met. & Min. Soc., So. Africa.*
Ibid., p. 15. Frank H. Probert. Concentration of ores in southwest Arizona.
Ibid., pp. 49, 102. J. P. Hutchins. An historical sketch of the development of dredges.
Ibid., p. 57. Description of the Newhouse mine and mill.
Ibid., p. 107. V. F. S. Low. Description of method of concentrating silver-lead ores at Broken Hill, New South Wales, with special reference to the New Block 10 mill.
Ibid., pp. 148, 433. R. H. Painter. Description of three typical mills in Virginia milling pyrite.
Ibid., p. 246. Geo. E. Walsh. Improvements in gold dredges.
Ibid., p. 297. T. H. Oxnam. Description of milling practice at the plant of the Palmarejo & Mexican Gold Company, Ltd., Chihuahua, Mexico. Abstract from *Am. Inst. Min. Eng.*, 1905.
Ibid., p. 443. Brief review of different processes adopted for concentration of zinc ores.
Ibid., p. 486. C. K. Hitchcock, Jr. Description of ore dressing at the Quincy mill, Hubbell, Michigan.
Ibid., p. 593. The probable average yield of the California dredge is given as $60,000.
Ibid., p. 683. S. A. Worcester. Description of the Tonapah Mining Company's mill.
Ibid., p. 770. Robert B. Brinsmade. Description of the concentration of pyrite at the Cole mine, owned by the Adirondack Pyrite Company, St. Lawrence County, N. Y.
Ibid., p. 772. David K. Blair. Reasons for failure of dredging operations in New South Wales.
Ibid., p. 829. Tin mining in Indo-China. Description of the Malacca type of sluice.
Ibid., p. 924. Fritz Cirkel. Description of milling methods of asbestos. Abstracted from *Bull. of Bureau of Mines of Canada*, "Asbestos Mining in Canada."
Ibid., p. 928. Brief description of two acid flotation processes in use at Broken Hill, New South Wales, Australia.
Ibid., p. 1064. W. G. Swart. The zinc industry of the Rocky Mts. Relative values of different processes of concentration.

Ibid., p. 1204. An article on the concentration of black sands.
Ibid., Vol. LXXXI., (1906), p. 418. W. S. Hutchinson. Description of concentration methods at El Poterito camp, Western Chihuahua, Mexico.
Ibid., p. 810. J. D. Minchin. Description of concentrating tin ore in Bolivia, So. America.
Ibid., p. 1140. G. S. Brooks. Description of concentration methods in the Platte mill, southwest Wisconsin.
Ibid., p. 1192. Description of pyrite concentration at Hermon, N. Y.
Ibid., 1236. Mark R. Lamb. Ore treatment at the Combination mine, Goldfield, Nevada.
Ibid., Vol. LXXXII., (1906), p. 53. Complete description of the Daly West mill, Park City, Utah.
Ibid., p. 58. Milling of lead ores in Wisconsin, Iowa, Illinois.
Ibid., pp. 103, 150. D. E. Woodbridge. Description of milling practices in Arizona.
Ibid., p. 152. An article on typical milling practice in Wisconsin.
Ibid., p. 202. Description of the Silver King mill, Park City, Utah.
Ibid., p. 232. Separation by flotation at Broken Hill, New South Wales.
Ibid., p. 248. Description of the Daly Judge mill, Park City, Utah.
Ibid., p. 339. C. T. Rice. Use of the Kinkead mill in Goldfield, Nevada.
Ibid., p. 344. Description of the DeBavay flotation process.
Ibid., p. 349. V. F. S. Low. Concentration of silver-lead ores at Broken Hill, New South Wales, Australia. Abstracted from *Austr. Inst. Min. Eng.*, 1906.
Ibid., p. 434. Description of the mill of the Utah Copper Company, at Bingham, Utah.
Ibid., p. 444. Description of milling method at the Enterprise mine, Plattesville, Wisconsin.
Ibid., p. 481. Description of magnetic concentration by the Joplin Separating Company, Galen, Illinois. Magnetic separation of a pyrite-blende product.
Ibid., p. 485. F. F. Sharpless. Description of quartz milling in Columbia, South America.
Ibid., p. 541. Brief article on the Empire mill, Plattesville, Wisconsin.
Ibid., p. 577. L. Tovey. Gold milling in Western Siberia.
Ibid., p. 584. W. H. Edwards. Description of concentration of chrome iron ore at the Black Lake Chrome and Asbestos mine, Quebec. Abstract from *Can. Min. Inst.*
Ibid., pp. 623, 965. D. E. Woodbridge. Description of concentration at the mill of Greene Consolidated Copper Company, Cananea, Mexico.
Ibid., pp. 673, 772. J. J. Rutledge. Description of pyrite dressing at the Davis pyrite mine, Rowe, Massachusetts.
Ibid., p. 821. H. W. Furniss. Description of diamond washing in Brazil. Abstract from *Popular Science Monthly.*
Ibid., p. 1005. E. K. Judd. Concentration of chalcocite and bornite in a quartz gangue at Virgilina, Va.
Ibid., p. 1009. C. T. Rice. Description of Col. Wall's mill, Bingham Canyon, Utah.
Ibid., p. 1216. L. H. Beason. Description of the mill of the Boston Con. Mg. Co. at Garfield, Utah.
Ibid., Vol. LXXXIII., (1907), p. 11. Description of zinc milling in Wisconsin.
Ibid., p. 21. J. P. Hutchins. Gold dredging in 1906.
Ibid., p. 150. G. A. Packard. Description of dry concentration at Round Mt. Nevada.
Ibid., p. 221. J. B. Farish. Description of the Dolores mill in Sierra Madre district, Chihuahua, Mexico.
Ibid., p. 261. C. T. Rice. Description of milling practice at Virginia City, Nevada.
Ibid., p. 317. G. Delprat. Complete description of methods used in milling at Broken Hill, New South Wales.
Ibid., p. 376. E. R. Ayres. Description of the Bull Frog cyanide mill.
Ibid., p. 520. J. P. Hutchins. Dredging on the Klondike.
Ibid., p. 649. C. W. Van Law. Description of the mill of the Guanajuato Reduction and Mines Company.
Ibid., p. 655. F. H. Probert. Description of a primitive Mexican crushing and milling plant.
Ibid., p. 658. R. B. Brinsmade. Description of the Union mill at Gratz, Kentucky.
Ibid., p. 708. E. Walker. An article on Cornish tin dressing.
Ibid., p. 805. F. L. Bosqui. Description of the Montana Tonopah mill.
Ibid., p. 889. G. W. Peterson. Description of method used in magnetic treatment of iron ores in Sweden.
Ibid., p. 901. E. H. Hamilton. Concentration at Humboldt, Arizona.
Ibid., p. 918. W. Brazenall. Suggestion of a device for saving black sands. Consists of an endless belt of rakes traveling against the current on the dredge tables.
Ibid., p. 941. E. Walker. Description of tin-ore dressing at East Pool, Cornwall.
Ibid., p. 951. Wm. Greenawalt. Treatment of tungsten ores in Colorado.
Ibid., p. 991. E. Walker. Description of the tin stream works of the Red River, Cornwall.
Ibid., p. 1037. E. Walker. Description of the Elmore process at the Tywarnhaile Copper mine, Cornwall, England.

Ibid., p. 1180. L. Fraser. Description of the Osceola mill, Hubbell, Mich.
Ibid., p. 1206. H. V. Hansell. Description of the Gröndal magnetic system used at Syd Varanger, in northern Norway.
Ibid., p. 1223. J. P. Hutchins. Gold-dredging practice at Ruby, Montana.
Ibid., Vol. LXXXIV., (1907), p. 59. D. Brittain. Milling the sheet ground ore in the Joplin district, Mo.
Ibid., p. 69. J. P. Hucthins. Gold dredges at Ruby, Montana.
Ibid., p. 202. Description of dredging operations in Tierra del Fuego.
Ibid., p. 352. S. A. Worcester. Description of ore washing at Cripple Creek, Colorado.
Ibid., p. 385. J. P. Hutchins. An article on dredging.
Ibid., p. 479. W. R. Ingalls. Description and methods of milling the porphyry ores of Bingham, Utah.
Ibid., p. 581. Description of the Lym Mt. magnetic mill.
Ibid., p. 637. J. F. Shaw. Description of milling practice at the Granadena mill, near Santa Barbara, Chihuahua, Mexico.
Ibid., p. 675. W. R. Ingalls. Description of the Giroux mill near Ely, Nevada.
Ibid., p. 813. W. R. Ingalls. Description of the mill of the Steptoe Valley S. & M. Co., near Ely, Nevada.
Ibid., p. 827. Juan de la C. Posada. Gold milling in Columbia, South America.
Ibid., p. 868. W. E. Ford. Improvements in milling of Missouri zinc ores.
Ibid., p. 871. E. Walker. Milling of lead and zinc ores in northern Wales.
Ibid., p. 877. D. T. Boardman. Description of the Providence mill, Webb City, Missouri.
Ibid., p. 955. J. P. Hutchins. Dredging of beach sands near Nome, Alaska.
Ibid., p. 1059. W. Braden. Description of the mill of the Braden Copper Company, Chili, South America.
Ibid., p. 1103. E. Walker. The Elmore oil process at Dolcoath.
Eng. News, (March 23, 1905.) Illustrated detail description of a recently completed mill at Redridge, Michigan.
Franklin Inst., Vol. CLX., (1905), p. 147. N. S. Keith. A method for concentrating low grade copper ores.
Genie Civil, Vol. XXXV., (1899), p. 273. J. Dupont. Description of the mill of the French Rand Mining Company.
Ibid., Vol. L., (1907), p. 318. Description of milling methods at Broken Hill, New South Wales.
Glückauf, Vol. XLI., (1905), p. 529. Dr. Kosmann. Illustrated discussion of the use of a dredging machine for excavating slime ponds.
Ibid., p. 881. O. Rehwagen. Brief description of dredging operations in Guiana.
Ibid., p. 1281. Haagen. Description of stamp mill practice at Douglas Island, Alaska.
Ibid., p. 1521. Berg assessor Herbst. Article gives flow sheet and description of a coal washery, illustrated with cuts of Humboldt breakers and screens and jigs of the Henry and Fancon types. Description also of Rowland and Mechernich magnetic separators.
Ibid., Vol. XLIII., (1907), p. 203. Description of dry concentration of zinc blende at the Bleischarley mill, Beuthen, Upper Silesia.
Ibid., p. 305. F. Peters. Zinc milling in British Columbia. Abstract from *Canadian Zinc Report.*
Ibid., p. 657. Bergrat Schenen. Description of the Central ore dressing plant at Clausthal.
Ibid., p. 963. Berg assessor Piegza. Description of the dry concentration of zinc ore at the Bleischarley mine, Beuthen, Upper Silesia.
India Geol. Survey Records, Vol. XXXI., Part IV., (1904). J. M. Maclaren. History of the former industry of washing river gravel for gold.
Inst. Civil Eng., Vol. CLIX., (1905), p. 295. George Attwood. Description of handling of ore at the Silver Cup and Nettie L. mines, British Columbia.
Ibid., Vol. CLXVIII., (1907), p. 252. E. J. Wary. Description of the stamp mill of the New Kleinfontein Co., Ltd., Witwatersrand, So. Africa.
Inst. Min. Eng., Vol. XXIII., (1902), p. 532. F. W. Payne. Dredging in New Zealand. Troublesome bed of clay is stripped in advance of dredge.
Ibid., p. 179. Wm. Scott. Description of the Craig coal washing machine.
Ibid., p. 517. J. J. Muir. Discussion of the treatment of low grade copper ore of Australia.
Ibid., Vol. XXV., (1903), p. 331. W. H. Borlase. Description of the lead-washing plant at the Greenside Mines, Potterdale.
Ibid., Vol. XXVIII., (1905), p. 585. W. T. Saunders. Description of milling practice at the Ivanhoe, Lake View Consols, Oroya, Brownhill, Golden Horseshoe, Kalgoorlie, and others in Australia.
Inst. Min. & Met., Vol. VI., (1897), p. 245. W. McDermott. Description of Eureka Hill mill.
Ibid., Vol. VII., (1899), p. 12. W. H. Derrick. Description of tin dressing in the Malay Peninsular.

Ibid., p. 19. R. R. Robert. An article on Lake Superior concentration methods.
Ibid., p. 77. W. McDermott. Brief notes on tin dressing in Bolivia.
Ibid., p. 175. R. Arthur Thomas. Crushing and concentration at the Dolcarth mine, Cornwall, England.
Ibid., p. 256. A. R. Canning. Treatment of ore at the Lucknow Gold Field, New South Wales.
Ibid., Vol. VIII., (1900), p. 332. F. H. Probert. Description of a custom stamp mill, Keewatin, Ontario.
Ibid., (1903), p. 452. N. B. Knox Dredging in Oroville, California. Abstract.
Ibid., Vol. XIV., (1905), p. 3. Charles Butters and E. M. Hamilton. Cyaniding of ore at El Oro, Mexico. Deals principally with re-grinding of sands.
Ibid., p. 186. E. D. McDermott. Description of the Baltic mill, Redridge, Michigan.
Ibid., p. 199. L. H. L. Huddart. Description of milling methods at St. Davids Gold mine. New South Wales.
Ibid., p. 221. Sidney Fawns. Description of the tin-dressing plant of the Mt. Bischof mine Tasmania.
Ibid., Vol. XVI., p. 200. Diamond dressing in So. Africa.
Ibid., p. 403. Gilman E. Brown. Stamp milling at the Great Fingall mine. Complete details of ten mills.
Ibid., Vol. XXVI., (1905), p. 224. Dietzsch. Description of treatment of a tin-wolfram ore at the Clitters United mine, East Cornwall, England.
Iron Age, Vol. LXXII., (1903), p. 10. Description of magnetic treatment at Minesvile, N. Y.
Ibid., p. 16. Magnetic concentration at the Hibernia mill, New Jersey.
Ibid., Vol. LXXV., (1905), p. 1025. D. E. Woodbridge. Description of the Anaconda Concentrator.
Iron & Steel Inst., Vol. LXIII., (1903), p. 549. K. G. Brunnberg. Account of progress made in concentrating Swedish ores by magnetism.
Iron Trade Rev., Vol. XXXIX., (1906), p. 27. Description of methods used for washing Mesabi iron ores at Canisteo, Minnesota.
Ibid., Vol. XL., (1907), p. 997. Washing Mesabi ores.
Jern. Konterets Annaler, (1905), No. 9, p. 367. R. Nordensten. Illustrated description of iron-ore concentration.
Ibid., (1907), p. 447. G. Fagerberg. Description of the concentrating plant at Salberget.
Los Angeles Min. Rev., (May 20, 1905). Brief description of the methods used for saving platinum at the deep gravel hydraulic placer mines of southern Oregon.
Metallurgie, Vol. III., (1906), p. 721. C. Blömeke. Description of the dry and wet electromagnetic separation of the Hernád thaler Hungary Iron Industrie Aktien Gesellschaft at Budapest.
Ibid., Vol. IV., (1907), p. 92. Magnetic concentration by the Joplin Separating Company. Abstract from *Eng. & Min. Jour.*, Vol. LXXXII.
Ibid., p. 125. Description of zinc separators in Colorado.
Ibid., p. 548. C. Blömeke. Description of the new mill at the Berzelius mine, Bensberg.
Ibid., p. 821. Treatment of zinc ores in Colorado.
Min. Ind., Vol. VI., (1898), p. 699. Robert H. Richards. General scheme of Missouri zinc mills.
Ibid., Vol. VII., (1899), p. 325. W. R. Ingalls. An article on gold milling.
Ibid., Vol. IX., (1900), p. 745. T. J. Greenway. Detailed description of the concentration of Broken Hill sulphide ores.
Ibid., p. 752. T. J. Greenway. Description of magnetic separation at Broken Hill, New South Wales.
Min. Jour., (March 18, 1905). Thomas Tonge. The placer fields of northwest America.
Ibid., Vol. LXXXII., (1907). J. D. Roberts. Gold dredging in Tierra del Fuego.
Ibid., (June 24, 1905). General discussion of the plans of the Broken Hill mine. Abstract from the *Report of the New South Wales Department of Mines.*
Ibid., (Aug. 19, 1905). Table of analysis of Cornish tin ores and brief discussion of magnetic separation and saving of copper.
Ibid., Vol. LXXXI., (1907), p. 45. A. F. Williams. Description of diamond dressing in So. Africa.
Ibid., p. 485. An article on tin dredging.
Ibid., p. 861. Bergrat Schenen. Description of the Central ore-dressing plant at Clausthal.
Ibid., Vol. LXXXII., (1907), p. 180. Placer mining in British Columbia.
Ibid., p. 352. Dredging in Hungary and Transylvania.
Ibid., Vol. LXXXIII., (1907), p. 1094. E. Ferraris. Description of the Calamine dressing plant at Monteponi.
Min. Mag., Vol. XI., (1905), p. 5. Robert H. Postlewaite. Illustrated article on prospecting and operating gold-dredging land from a practical business point of view.

Ibid., pp. 16, 123. C. W. Purington. Complete description of methods and costs of gravel and placer working in Alaska. Abstract from *U. S. Geol. Survey*, Bull. No. 263.
Ibid., p. 41. D. H. Bradley, Jr. Brief description of tin dressing in Bolivia.
Ibid., p. 123. C. W. Purington. Description of sluicing and gold-saving tables as used in Oroville, California, and in Alaska.
Ibid., p. 139. Waldemar Lindgren. Deals with working of ancient stream gravels or "deep leads" and sluicing method in Victoria, Australia.
Ibid., p. 158. C. W. Whitney. The electrical equipment of gold dredges.
Ibid., p. 401. G. A. Denny. A general illustrated description of the Van Ryn Gold Mines Estate crushing and cyaniding mill.
Ibid., p. 494. C. A. Tupper. General description of gold dredging in Alaska.
Ibid., Vol. XII., (1905), p. 173. G. A. and H. S. Denny. An illustrated comparison of present mill treatment of ore on the Rand and a suggestion for new treatment by fine grinding, etc.
Ibid., p. 316. F. H. Probert. Concentration of copper ores in the southwest. Description of practice at the West Yankee, Shannon, and Longfellow concentrators. Abstract from *Am. Min. Congress*, Vol. VII.
Ibid., Vol. XIII., (1906), p. 322. L. A. Palmer. Description of the Cactus mill, Newhouse, Utah.
Ibid., p. 327. H. R. Van Wagenen. Description of methods used in the concentration of tungsten ores of San Juan County, Colo. Abstract from *Colo. Sch. Mines*, Bull.
Min. Mag. Digest, Vol. XII., (1905), p. 240. C. H. Hitchcock, Jr. Treatment of copper ore at the Quincy mill, Hubbell, Michigan.
Mines & Minerals, Vol. XVIII., (1898), p. 481. E. Hedburg. Detailed description of zinc and lead ore-dressing plants in the Joplin district, Mo.
Ibid., Vol. XIX., (1899), p. 380. R. W. Bell. Dredging in Grasshopper Creek.
Ibid., p. 536. J. M. Sweeney. Amalgamated plates and riffles in gold dredging.
Ibid., Vol. XX., (1899), p. 58. Don. Maguire. Description of the burlap process for treatment of placer gold.
Ibid., p. 303. Arthur Locke. An article on concentration at Cœur d'Alene, Idaho.
Ibid., p. 341. R. H. Postlewaite. An article on gold dredging.
Ibid., p. 343. Description of the new Bunker Hill and Sullivan mill.
Ibid., Vol. XXI., (1900), p. 9. R. L. Watson. Gold dredging in British Columbia.
Ibid., p. 108. Arthur Lakes. Description of the Huile gold mill.
Ibid., p. 181. A. W. Robinson. An article on gold dredging. Abstract from *Cassier's Mag.*
Ibid., p. 196. W. S. Russell. An article on gold dredging.
Ibid., p. 202. G. H. Evans. An article on hydraulic gold mining.
Ibid., p. 343. W. C. Clark. Saving of slimes in the Cœur d'Alene district, Idaho.
Ibid., p. 350. A. C. Perkins. Gold dredging in New Zealand.
Ibid., p. 465. W. R. Crane. General outline of a lead-zinc mill.
Ibid., Vol. XXII., (1902), p. 241. R. B. Brinsmade. Detailed description of concentrating practice in southwest Missouri.
Ibid., Vol. XXIII., (1902), p. 58. An article on milling in the Transvaal.
Ibid., p. 433. Arthur Lakes. Description of milling practice in the Creede mining camp, Colorado.
Ibid., p. 481. G. W. Harris. Description of methods used in working over the old dumps of the Bellevue colliery.
Ibid., Vol. XXV., (1905), p. 299. W. McDermott. Description of the Baltic mill, Redridge, Michigan. Abstract from *Inst. Min. & Met.*, 1905.
Ibid., p. 417. W. R. Crane. Description of washing soft iron ores in Birmingham district, Alabama.
Ibid., p. 421. C. H. Fulton. History of the development of the Homestake mills from 1878 to 1904. Details of stamp-mill practice.
Ibid., p. 448. Alfred Harvey. Plan for a 150 ton section of a mill for treating an ore carrying argentiferous galena, iron oxide, pyrite, some chalcopyrite, and a little zinc.
Ibid., Vol. XXVI., (1905), p. 35. F. B. Stephens. Treatment of refractory sulphides at Cassiles mine, Victoria, Australia. Abstract from *Inst. Min. &. Met.*
Ibid., p. 54. E. B. Wilson. Illustrated description of mill and process used by the American Asbestos Company in preparing amphibole asbestos for market.
Ibid., p. 75. C. K. Hitchcock. The milling method of the Quincy mill, Hubbell, Michigan. Abstract from *Sch. Mines Quart.*
Ibid., p. 130. A. Morison. Concentration methods of the Arizona Copper Company, Clifton, Arizona. Abstract from *Min. Reporter.*
Ibid., p. 224. Dietzsch. The treatment of the tin-wolfram-copper ore at the Clitters Limited mine. Abstract from *Inst. Min. & Met.*
Ibid., p. 337. L. A. Palmer. Description of the Cactus mill, Newhouse, Utah.
Ibid., p. 346. A. S. Atkinson. Description of general Lake Superior milling practice.

Ibid., p. 368. H. A. Wheeler. Magnetic separation of zinc ores in Wisconsin. Recovery given.
Ibid., p. 492. R. B. Brinsmade. Full description of the Combination Mountain silver-mill in Granite County, Montana.
Ibid., Vol. VII., (1906), p. 63. T. L. Watson. An article on the concentration of Virginia zinc ores. Abstract from *Am. Inst. Min. Eng.*, Bull. No. 8, March, 1906.
Ibid., p. 149. R. B. Brinsmade. Description of the mill of the North American Lead Company, Frederickton, Mo.
Ibid., p. 337. G. P. Scholl and R. L. Herrick. Description of the Gold Prince mill at Animas Forks, Colorado.
Ibid., p. 390. Description of the Old Hundred mill at Howardsville, Colorado.
Ibid., p. 399. Philip Argall. An article on ore milling in the Slocan district, British Columbia.
Ibid., p. 402. Description of diamond dressing in So. Africa.
Ibid., p. 403. Proposed method of separation of zinc ores at the Blue Bell mine, West Kootenay, British Columbia.
Ibid., p. 421. C. W. Goodale. Concentration of Butte ores at Great Falls, Montana.
Ibid., p. 465. R. B. Brinsmade. Complete description of concentration methods at Greene Cananea, Cananea, Mexico.
Ibid., p. 498. G. P. Scholl. Description of the Gold King mill, Gladstone, Colorado.
Ibid., p. 529. Milling at Mowry, Arizona, of an argentiferous lead carbonate mixed with clay limestone and oxides of iron and manganese.
Ibid., Vol. XXVIII., (1908), p. 5. F. W. Traphagen. Description of treatment of the zinc ores of Colorado.
Ibid., pp. 32, 79. An article on the Daly Judge mine and mill, Park City, Utah.
Ibid., p. 37. An article on the Washoe smelter.
Ibid., p. 131. An article on the Washoe concentrator.
Ibid., p. 145. R. L. Herrick. Typical milling practice of the Joplin district, Missouri. Flow sheet of a typical mill is given.
Ibid., p. 158. C. L. Watson. An article on the milling practice of the Joplin district, Missouri.
Ibid., p. 162. W. D. Glenn. Tailings and sludge milling in the Joplin district, Missouri.
Ibid., p. 167. R. L. Herrick. Description of the Yellow Dog mill, Missouri.
Ibid., p. 171. An article on the Davy No. 3 mill, Joplin, Missouri.
Min. Reporter, Vol. XLV., (1902), p. 252. Milling at the Portland mill, Cripple Creek, Colorado.
Ibid., p. 555. Description of the Morning Mill, Mullen, Idaho.
Ibid., Vol. XLVI., (1902), p. 147. Description of the Daly West mill, Park City, Utah.
Ibid., p. 504. G. H. Elmore. An able discussion of magnetic separation of zinc-iron sulphides.
Ibid., p. 490. Description of a concentration and slime classifying plant at the Daly West mill, Park City, Utah.
Ibid., Vol. XLVIII., p. 406. Description of the Alaska-Treadwell mill.
Ibid., Vol. LI., (1905), p. 4. Brief description of the Nederland and Boulder County mills which treat the tungsten ores of Boulder County, Colorado.
Ibid., p. 68. W. G. Swart. Good description of a mill at Silverton, Colorado, for treating an ore carrying galena, blende, and pyrite with some gold and silver.
Ibid., p. 142. Sydney Fawns. Tin dressing at Mt. Bischof, Tasmania, Australia. Abstract from *Inst. Min. & Met.*
Ibid., p. 234. The investigation of the black sands of the Pacific coast by the U. S. Geol. Survey.
Ibid., p. 373. Frank C. Perkins. Illustrated description of various types of dredges, comparing American and European dredges in general.
Ibid., p. 547. C. M. Rath and R. L. Grider. Description of the Jackson concentrating works, Idaho Springs, Colorado. Ore treated is a sulphide ore carrying lead, zinc, iron, and copper.
Ibid., p. 599. Full description of power, amalgamation, and cyanide plant of the Cerro Prieto mine, Sonora, Mexico, which treats a $5 to $6 ore.
Ibid., Vol. LII., (1905), p. 8. A. Morison. Brief description of three concentrators handling sulphides and low grade oxides and carbonate copper ores at Clifton, Arizona.
Ibid., p. 80. C. W. Purington. Complete description of methods and costs of gravel and placer working in Alaska. Abstract from *U. S. Geol. Survey*, Bull. No. 263.
Ibid., p. 210. G. E. Wolcott. Description of methods of concentration applicable to Cripple Creek ores.
Ibid., p. 258. Gold dredging in California. Excerpt from *California State Mine Bureau*, Bull. 36.
Ibid., p. 491. Description of a magnetic separation process used at the London mill, Queensland, Australia. Iron and tin concentrates are fed over a vanner, the wash water of which is charged with electricity. Abstract from *North Queensland Register.*

Ibid., p. 492. David H Lawrence. The concentration and separation of zinc-lead ores as practiced in Summit County, Colorado.
Ibid., p. 498. Description of milling methods in the Pearl Idaho camp.
Ibid., p. 547. C. M. Rath and R. L. Grider. Description of the Jackson concentrating works at Idaho Springs, Colorado.
Ibid., Vol. LIII., (1906), p. 108. A. W Dyer. Description of lead and zinc concentration at Roseberry, British Columbia. Abstract from *Canadian Min. Review.*
Ibid., p. 556. Description of the Dives-Pelican and Seven-Thirty mill at Silver Plume, Colorado. The ore treated is a silver-lead-zinc ore.
Ibid., p. 636. Milling practice in different Colorado camps.
Ibid., Vol. LIV., (1906), p. 39. Gardiner F. Williams. Treatment of diamond bearing ground at the De Beers mine, So. Africa.
Ibid., p. 56. G. E. Alexander. Description of milling practice at the North Star mill, Grass Valley, California.
Ibid., p. 82. Description of the mill of the Hanna M. &. M. Company, Capitol City, Colorado. The ore treated carries lead, copper, zinc, and iron sulphides in a quartz gangue.
Ibid., p. 204. H. J. Barm. Description of the Gold Prince mill, near Silverton, Colorado.
Ibid., pp. 229, 286, 341, 386, 410. A series of articles describing milling practice in different Colorado camps.
Ibid., p. 258. L. S. Austin. Description of the Washoe Plant of the Anaconda Copper Company. Abstract from *Am. Inst. Min. Eng.*
Ibid., p. 307. W. H. Edwards. Concentration of chrome iron ore at Black Lake Chrome and Asbestos Company's mine, Quebec. Abstract from *Can. Min. Inst.*
Ibid., p. 334. H. J. Baron. Concentration at the Old Dominion mill, Globe, Arizona.
Ibid., p. 422. A. W. Warwick. Brief description of the milling process at the A. M. W. mill, Leadville, Colorado.
Ibid., p. 435. Description of the milling plants of Yavapai County, Arizona.
Ibid., Vol. LV., (1907), p. 37. Description of No. 3 dredge of the Conrey Placer Mining Company, Ruby, Montana.
Ibid., p. 134. O. Ruhl. Milling in southwest Missouri.
Ibid., p. 218. Concentration of zinc ores in Colorado.
Ibid., p. 306. Good general article on dredging in New Zealand.
Ibid., Vol. LVI., (1907), p. 31. Complete description of stamp milling in Nova Scotia.
Ibid., p. 33. J. D. Roberts. An article on gold dredging in Tierra del Fuego. Abstract from *Min. Jour.*, June 1, 1907.
Ibid., p. 35. Use of the Hancock jig in connection with dredging operations.
Ibid., p. 240. D. B. Sellars. An article on gold dredging in Victoria.
Ibid., p. 268. P. Barker. Description of magnetic concentration at Cañon City, Colorado.
Ibid., pp. 376, 536. P. Barker. Milling the porphyry ores of Bingham, Utah, with special reference to Utah Copper Company.
Ibid., p. 418. An article on sludge mill practice in the Missouri-Kansas district.
Min. & Sci. Press, Vol. LXXVIII., (1899), pp. 12, 36, 60. W. J. Loring. An article on the milling practice at Utica, California. Abstract from *Inst. Min. Eng.*
Ibid., p. 42. Wascott. Description of Young's gold dredge.
Ibid., p. 208. J. W. Gray. An article on gold dredging in New Zealand.
Ibid., p. 322. Description of two new stamp mills.
Ibid., p. 341. Description of the Yellow Aster mill, Randsburg, California.
Ibid., p. 346. Dredging on Feather River, Oroville, California.
Ibid., Vol. LXXIX., (1899), p. 60. Alexander McDougall. An article on placer gold.
Ibid., p. 149. Wascott. An article on dredging in the Boisé Basin, Idaho.
Ibid., pp. 340, 379. "W. H. S." Concentration of auriferous sulphides in California.
Ibid., p. 435. Description of gold dredging in Oregon.
Ibid., p. 574. Description of the Smuggler Union mill, Telluride, Colordo.
Ibid., Vol. LXXX., (1900), pp. 92, 124. Ches. Taylor. General article on wet concentration.
Ibid., p. 93. Description of a dredge on the Volga, Russia.
Ibid., pp. 94, 120, 206, 643. T. F. Van Wagenen. Series of articles on gold dredging.
Ibid., p. 121. H. V. Croll. An article on gold milling in Georgia.
Ibid., p. 264. R. M. Downie. Testing of dredging ground.
Ibid., p. 318. Horace F. Brown. Spanish mine milling.
Ibid., p. 318. Horace F. Brown. Gold milling in Nevada County, California.
Ibid., p. 488. S. I. Hallett. Plans for two mills for small mines.
Ibid., p. 668. Henry Watson. Description of the Alaska-Treadwell mill.
Ibid., Vol. LXXXI., (1900), p. 187. Editor. Description of a California stamp mill.
Ibid., p. 188. D. E. Bigelow. Description of the Octave mill at Weaver, Arizona.
Ibid., p. 505. Description of the new tailings plant at Kellogg, Idaho.
Ibid., Vol. LXXXII., (1901), p. 5. S. W. Traylor. An article on coarse concentration without sizing.

Ibid., p. 79. B. MacDonald. An article on the feeding of water to stamp mills.
Ibid., p. 84. An article in which is treated the pneumatic tube as an aid to gold dredging.
Ibid., p. 85. A. W. Warwick. Stamp mill foundations.
Ibid., p. 103. A. W. Warwick. Detailed data for calculating power required by stamps.
Ibid., Vol. LXXXIII., 1901, p. 45. Wm. H. Washburn. Description of method used on Snake River, Idaho, for saving fine gold.
Ibid., p. 262. Everett B. Sawyer. An article on a direct wet crushing cyanide mill of the Black Hills.
Ibid., p. 215. Description of the Humphreys mill, Creede, Colorado.
Ibid., Vol. LXXXIV., 1901, p. 22. Notes on the Crown Gold dry concentrating plant, Tintic, Utah.
Ibid., p. 43. Description of a current motor dredge operated in the Colorado River near El Dorado Cañon.
Ibid., p. 50. Brief description of milling methods used and results obtained at Hedges, California.
Ibid., p. 74. Description of magnetic separation at Creede, Colo.
Ibid., p. 103. Stamp milling at the Commonwealth mill, Pearce, Ariz.
Ibid., p. 142. Brief description of milling methods used at the concentrator of the Detroit Copper Company, Morenci, Ariz.
Ibid., p. 252. Brief description of the Wasp No. 2. mill at Kirk, S. Dakota.
Ibid., p. 295. Description of the new Portland mill, Colorado City, Colorado. The process used is dry crushing, roasting, chlorination and smelting.
Ibid., Vol. LXXXV., 1902, p. 204. James H. Steele. Complete description of the Silver King mill, Park City, Utah.
Ibid., p. 324. An article showing distribution of gold as caught in sluice boxes at a low grade gravel property in California. Comments as to length of sluice required, assay, and costs of working.
Ibid., Vol. LXXXVI., 1903, p. 52. W. W. Bradley. Description of the Melones Mining Company's plant at Melones, Calaveras County, California.
Ibid., p. 69. Description of the Allison Rand mine.
Ibid., p. 135. Description of the mine and mill of the Ophir Consoldiated Mines Company, San Miguel County, Colorado.
Ibid., p. 150. C. W. Merrill. Description of treatment of the Homestake ores.
Ibid., p. 167. C. M. Myrick. Full description of the Cornwall system of tin concentration.
Ibid., p. 216. J. A. Yeatman. Description of plants for hydraulicking under artificial pressure.
Ibid., p. 244. P. Bouery. Hydraulicking of low grade gravels.
Ibid., p. 263. H. C. Boydell. Description of milling practices in Bendigo, Australia.
Ibid., p. 336. H. F. Brown. Description of the new plant of the Royal Consolidated Mine Company, Ltd., at Hodson, California.
Ibid., Vol. LXXXVII., (1903), p. 20. An article on dredging in the Oroville district, California.
Ibid., p. 304. Notes on the mill of two 100 ton units of the Van Meter-Boss oil concentrators at the Carahuacra Mine, Victoria, Peru.
Ibid., Vol. XC., (1905), p. 10. F. C. Roberts. Details of stamp-mill practice in Africa.
Ibid., p. 20. C. W. Wright. Short description of hydraulic mining by elevator and sluice box.
Ibid., p. 102. An article on concentration at Cripple Creek, Colo.
Ibid., p. 102. An article on the Oroville Dredging Company, Oroville, California, giving expenses, extraction, repairs, etc.
Ibid., p. 119. F. C. Roberts. An article containing notes on the milling practice of Rhodesia, So. Africa.
Ibid., p. 218. Description of the Baltic mill, Redridge, Michigan, which is a typical Lake Superior mill.
Ibid., pp. 232, 252, 265. L. J. Hohl. Illustrated description of gold dredging as practiced in Oroville, California. Discussion of cause of delays, capacities, etc. Abstracted from *California Mines Assoc.*, Dec., 1904.
Ibid., p. 247. A comparison of old style and modern dredges.
Ibid., p. 282. Illustrated write up of a large gold bucket-type dredge in use at Folsom, California, having a capacity of 140,000 cubic yards.
Ibid., p. 335. Concentration of cinnabar at Sulphur Creek, California. Huntington mills and Gilpin County bumpers are used.
Ibid., p. 373. Concentration of zinc ores in British Columbia. Abstract from *Kaslo Daily News*, Kaslo, British Columbia.
Ibid., p. 387. Discussion of the use of the sluice extension to be used in place of tailings elevator when it is necessary to leave land behind dredge fairly level.

Ibid., p. 409. The treatment of refractory auriferous sulphides at Cassilis mine, Victoria, Australia. Abstract from *Inst. Min. & Met.*
Ibid., Vol. XCI., (1905), p. 44. V. F. S. Low. Description of mill intended to treat silver-lead ores in Broken Hill, New South Wales. Abstract from *Austr. Inst. Min. Eng.*
Ibid., pp. 76, 109, 127, 142, 158, 176, 191, 211, 228, 247, 263, 276, 292, 312. C. W. Purington. Placer mining in Alaska. Abstract from *U. S. Geol. Survey*, Bull. 263.
Ibid., pp. 125, 141, 160, 178. Complete description of dredging practice in California, giving costs, capacities, etc.
Ibid., p. 152. W. M. Harts. Control of hydraulic mining débris in California by the Federal Government.
Ibid., p. 195. C. K. Hitchcock. The treatment of copper ore at the Quincy mills, Hubbell, Michigan. Abstract from *Sch. Mines Quart.*
Ibid., p. 341. Magnetic separation of tin-iron ore at London mill, Queensland, Australia. Abstract from *North Queensland Register.*
Ibid., pp. 342, 359. O. P. Findley. Description of the plant of the Cananea Consolidated Copper Company, Sonora, Mexico.
Ibid., p. 343. General description of the milling practice of Gilpin County, Colorado.
Ibid., p. 345. Otto Halla. Brief description of work done by a few dredges in the Nome Gold Fields, Alaska.
Ibid., p. 449. J. M. Callow. Flow sheet of mill operated on Callow's system of ore classification as applied to the concentration of finely crushed materials and recovery of water.
Ibid., p. 365. David H. Lawrence. Description of methods of concentration of zinc lead ores at the Old Union mill, Breckenridge, Colorado.
Ibid., p. 366. Robert Allen. Description of the reduction plant and process at the Oroya-Brownhill Mines, Western Australia.
Ibid., p. 373. Description of the custom mill of Kootenay Ore Company for the treatment of zinc ores of Kaslo, British Columbia.
Ibid., p. 398. W. E. Thorne and E. J. Moore. Costs per cubic yard for dredging in different parts of Colorado.
Ibid., Vol. XCII., (1906), p. 143. Algernon De Mar. An article on stamp milling in Northern California. Costs, etc., are given.
Ibid., p. 232. Description of treatment of the old dump at Mine La Motte, Missouri.
Ibid., p. 240. A. D. Foote. Description of the North Star mill, Grass Valley, California.
Ibid., Vol. XCIII., (1906), pp. 413, 451. F. L. Bosqui. Ore treatment at the Combination mill, Goldfield, Nevada.
Ibid., Vol. XCIV., (1907), p. 159. Description of a dredge at Ruby, Montana, operated by electricity.
Ibid., p. 211. Many valuable details given on modern gold milling.
Ibid., p. 243. Milling in the Cœur d'Alene district, Idaho.
Ibid., p. 375. Description of the rock houses of the Copper Range Mining Company, Michigan.
Ibid., p. 407. Milling methods at Broken Hill, New South Wales.
Ibid., p. 467. Description of the concentration plant of the Washoe Smelter, Montana.
Ibid., p. 474. L. H. Beason. Description of the mill of the Utah Copper Company, Garfield, Utah.
Ibid., p. 568. S. Turner. Description of the Hercules mill, Burke, Idaho.
Ibid., p. 575. D. H. Storall. An article on sluices and riffles in dredging.
Ibid., p. 729. F. H. Jackson. Description of the acid flotation process used at Broken Hill, New South Wales.
Ibid., p. 824. T. A. Rickard. Description of the mill of the Guanajuato Reduction and Mines Company.
Ibid., Vol. XCV., (1907), pp. 78, 457. T. A. Rickard. Description of the mill of the Guanajuato Reduction and Mines Company.
Ibid., p. 268. W. E. Darrow. Complete discussion of concentration of gold mill slime.
Ibid., p. 374. W. J. Adams. Improvements in the mechanical treatment of gold ores.
Ibid., p. 494. A. R. Parsons. Description of the Desert mill near Tonopah, Nevada.
Ibid., p. 559. A. C. Nahl. An article on hand jigging of dumps of the Progress Mining Company, Triumph, Baja California, Mexico.
Min. Sci., Vol. LVI., (1907), p. 608. O. Ruhl. An article on milling in the Missouri-Kansas district.
Ibid., p. 611. R. B. Hosker. Description of the milling plant of the Western Chemical Manufacturing Company, Denver, Colorado.
Mineral Wealth, (May 1, 1905). A. P. Dittmar. Brief illustrated description of methods of working at the Golden Drift Mining Company, Grant's Pass, Oregon. Hydraulicking is done by artificial pressure.
Ibid., (May 15, 1905). A. P. Dittmar. An article on hydraulic mining in southern Oregon.
Mining World, (July 27, 1905). C. W. Purington. An article on gravel and placer mining in Alaska.

Ibid., March 11, 1905. R. N. Bell. Description of method employed to recover fine gold in Snake River placers.
Ibid., Vol. XXIII., 1905, p. 92. C. W. Purington. Gravel and placer mining in Alaska. Abstract from *U. S. Geol. Survey*, Bull. 263.
Ibid., p. 118. A. G. Hillen. Illustrated description of California gold-dredging methods.
Ibid., p. 122. Kirby Thomas. Illustrated description of different concentrating machines used for black sand concentration for U. S. Geol. Survey at Portland, Oregon, 1905.
Ibid., p. 168. Kirby Thomas. General description of dredging operations at Golden, Colorado.
Ibid., p. 174. Description with flow sheet of concentrating mill in Utah Building at the Lewis & Clark Exposition.
Ibid., p. 227. Placer mining in Siberia. Abstract from *L'Industrie aurique*.
Ibid., p. 306. Kirby Thomas. Hydraulic mining in Colorado.
Ibid., p. 557. David H. Lawrence. Description with flow sheet of the Old Union mill, Summit County, Colorado.
Ibid., Vol. XXIV., (1906), p. 409. Ralph Stokes. Diamond washing at the Premier mine, Natal, So. Africa.
Ibid., Vol. XXV., (1906), p. 373. Kirby Thomas. Description of the San Martin mill, Chihuahua, Mexico, for treating a lead-silver-copper ore.
Ibid., pp. 424, 572. Ralph Stokes. Tin washing in the Malays.
Ibid., p. 515. A. L. Carnahan. Description of the Calumet mill, Lake Linden, Michigan.
Ibid., p. 634. Tin concentration in the Carolinas. Abstract from *U. S. Geol. Survey*, Bull. No. 293.
Ibid., Vol. XXVI., (1907), pp. 4, 34. Ralph Stokes. Details of milling practice in Western Australia.
Ibid., p. 41. J. M. Gowan. An article on gold dredging by water power.
Ibid., p. 246. W. A. Root. Description of the Octave mill.
Ibid., pp. 300, 326, 561, 592. Kirby Stokes. Description of milling practice at Broken Hill, New South Wales.
Ibid., p. 385. F. C. Nicholas. An article on gold dredging in Brazil.
Ibid., pp. 598, 626, 691. J. B. Hill and D. A. MacAlister. Dressing of tin ores. Abstract, from *Memoirs of the Geological Survey of England and Wales*.
Ibid., p. 654. G. L. Holmes. An article on placer dredging in California.
Ibid., pp. 719, 776, 806. Ralph Stokes. The Tasmania tin industry.
Ibid., p. 762. An article on the Calumet & Hecla tailings plant, Lake Linden, Michigan.
Ibid., p. 777. Costs of gold dredging.
Ibid., Vol. XXVII., (1907), p. 55. Ralph Stokes. An article on tin dressing at Mt. Bischof, Tasmania.
Ibid., p. 58. A few ideas on the tungsten mill of Colorado.
Ibid., p. 69. Description of the Kimberly-Wilfley mill at Kokomo, Colorado,
Ibid., p. 267. W. M. Johnson. Description of the Kelly mill, Socorro County, New Mexico.
Ibid., p. 273. Ralph Stokes. Description of the mill of the Brittania Copper Company, British Columbia.
Ibid., p. 306. Ralph Stokes. Description of the Coniagas mill, Cobalt, Ontario.
Ibid., p. 637. Outline of process used at Lym Mountain mill, New York.
Ibid., pp. 671, 788. An article on milling in Mexico.
Ibid., pp. 692, 1047. H. J. Clark. An article on modern gold dredging.
Ibid., p. 699. E. Burt. Details of milling practice at El Oro, Mexico.
Ibid., p. 799. R. Stokes. An article on asbestos dressing at Thetford and Black Lake, Quebec.
Ibid., p. 846. W. A. Root. Description of water flotation at Golconda, Nevada.
Ibid., p. 967. Ralph Stokes. Milling at the St. Eugene mine, British Columbia.
Ibid., p. 1001. F. C. Nicholas. Description of the Macquisten water flotation process in use at the Gold Hill Copper Company's mill, Salisbury, North Carolina.
Ibid., p. 1043. D. Brittain. Milling at Gundling No. 5, Joplin, Mo.
Ibid., p. 1123. R. Stokes. Milling in the Rossland district, British Columbia.
New Zealand Mines Rec., Vol. VIII., (1905), p. 261. An article dealing with the returns of dredging operations.
Ibid., Vol. IX., (1906), p. 387. Costs and results at Mt. Bischof tin mill, Tasmania.
Ibid., Vol. X., (1907), p. 330. Some suggestions on stamp milling.
Ibid., Vol. X., (1907). Several good articles in the volume on gold dredging.
New Zealand Mines Statements, (1900). J. P. Smith. An article on New Zealand gold dredges.
Nova Scotia Mining Soc., Vol. V., Part I., p. 4. T. H. Mason. Concentration of galena and blende in a metamorphic schist.
Oest. Zeit., Vol. XLVI., (1898), p. 347. E. Ferraris. Description of magnetic separation at Monteponi, Italy.

Ibid., Vol. XLVII., (1899), p. 51. E. Primosigh. Description of plant at Pitkäranta, Finland.
Ibid., Vol. XLIX., (1901), p. 429. G. Gröndal. Description of magnetic separators at Pitkäranta, Finland.
Ibid., Vol. LIII., (1905), p. 83. Oskar Eypert. Description of the mill of the Goldergbergbau am Rondug in Bohemia.
Ibid., p. 279. J. K. Ann. Concentration of a blende and galena ore.
Ibid., Vol. LV., (1907), pp. 209, 221, 235, 249, 263, 275. L. St. Rainer. Complete description of gold dredging in Europe.
Ibid., p. 593. Martin Baldauf. Description of the Elmore vacuum oil process at Port Thyn, Cornwall, England.
Revue de Metallurgie, Vol. IV., (1907), p. 471. Milling at Broken Hill, New South Wales, Australia.
Ibid., p. 473. An article on the zinc separators used in Colorado. Abstracted from *Metallurgie*, Vol. IV., (1907).
Ibid., p. 597. An article on tin washing in Cornwall, England.
Ibid., p. 600. G. W. Peterson. Description of magnetic separators of iron ores in Sweden.
Ibid., p. 681. The treatment of tungsten ores in Colorado.
Ibid., p. 682. Tin ore dressing at East Pool, Cornwall, England.
Ibid., p. 840. Many valuable details given regarding modern gold milling.
Sch. Mines Quart., Vol. XXVI., (1905), p. 340. C. K. Hitchcock, Jr. The treatment of copper ore at the Quincy mills, Hubbell, Michigan.
Sci. American Supp., Vol. LIX., p. 24368. Illustrated description of the concentration plant at the St. Louis Exposition.
Soc. Ind. Min., Vol. IV., Ser. IV., (1905), p. 275. J. M. Bell. Brief description of methods employed in working placer gold in Yukon, Canada.
Ibid., p. 525. An article on the milling methods of Broken Hill, New South Wales.
So. African Assoc. Eng. & Arch., Vol. IV., (1897), p. 53. H. R. Skinner. Handling of tailings, slimes, and sands in the Witwatersrand.
So. African Min. Jour., Vol. VII., (1898), p. 504. Comparison of cyaniding with and without concentration.
Ibid., Vol. VIII., (1899), p. 385. Franklin White and G. H. Furnee. An article on dry crushing and cyaniding at the Luipardsvlei mine.
Stahl u. Eisen, Vol. XXV., (1905), p. 532. Dr. Weiskopf. Tree of process for treating magnetically an iron ore containing both magnetite and hematite.
Ibid., p. 1296. O. Simmersback. Description of a magnetic treatment and mill for treating an iron ore containing high percentage of phosphorus. Abstract from *Iron Age*.
Ibid., Vol. XXVII., Part I., (1907), p. 214. An article on magnetic concentration at Minesville, New York.
Ibid., p. 505. An article on magnetic concentration in Sweden.
Tech. Soc. Pac. Coast, (Sept. 7, 1900). Dana Harmenn. Stamp milling of free gold ores.
U. S. Geol. Survey Mineral Resources, (1905). An article on zinc separation in Colorado.
Ibid. D. T. Day and R. H. Richards. Concentration of black sands.
U. S. Geol. Survey. Bull. No. 251. Louis M. Prindle. History, geology, and economic development of different gold placers in Alaska.
Ibid., Bull. No. 247. F. H. Moffit. Description of the Fairhaven gold placers on the Seward Peninsula, Alaska.
Ibid., Bull. No. 259. C. W. Purington. Description of different kinds of placer mines, costs of working each.
Ibid., Bull. No. 260, p. 587. Brief description of the milling of pyrite at the Stella mine, St. Lawrence County, N. Y.
Ibid., Bull. No. 263. C. W. Purington. Exhaustive treatise on methods and costs of placer mining in Alaska.
Ibid., Bull. No. 293, p. 53. Tin concentration in the Carolinas.
West. Soc. Eng., Vol. VIII., (1903), p. 1. C. F. Jackson. Description of copper milling in upper Michigan.
Zeit. Berg-Hütt- u. Salinen-wesen, Vol. XLVII., (1899), p. 246. Hübner. Control of slimes at Tarnowitz.
Ibid., Vol. LIII., (1905), p. 125. Experiments and improvements in mining and milling in Prussia during 1904.
Ibid., p. 189. Rose. Description of a lead-zinc concentrating mill using magnetic separators.
Ibid., Vol. LV., (1907), p. 128. Description of the new Helena zinc concentrator.
Ibid., p. 131. Dry concentration at Roseberry.
Ibid., (1901), p. 261. Short description of the Ashio mill, Japan.

BIBLIOGRAPHY FOR GENERAL IDEAS ON MILLING.

Am. Inst. Min. Eng., Vol. XXIX., (1899), p. 459. A. J. Clark. Tests at the Homestake mill in 1897.

Ibid., Vol. XXIV., (1903), p. 478. Robert H. Richards and E. E. Bugbee. Paper on "School laboratory work, a free milling gold ore."
Am. Mfr., Vol. LXVII., (1900), p. 359. Costs of mining. Abstract.
Can. Min. Inst., Vol. II., (1899), p. 28. A. C. McCallum. Design of mining machinery.
Ibid., Vol. II., (1900), p. 102. F. T. Snyder. Importance of mill constants for the engineer.
Ibid., Vol. IX., (1906), p. 64. Courtenay De Kalb. Complete article on general ideas on stamp-mill practice.
Ibid., p. 143. J. P. Porter. Directions for carrying out a complete concentration test.
Can. Min. Jour., Vol. I., (1907), p. 176. F. H. Sexton. Description of ore dressing apparatus at Dalhousie University, Halifax, Nova Scotia.
Ibid., p. 369. G. J. McKay. Description of the testing laboratory of the School of Mines at Kingston, Ontario.
Ibid., p. 436. E. P. Brown. Stamp-mill records. Suggestions as to keeping of accounts of stamp-mill work.
Can. Min. Rev., Vol. XVIII., (1899), p. 37. A. C. McCallum. Design of mining machinery.
Ibid., p. 294. S. H. Pearce. Design of mining machinery.
Ibid., Vol. XIX., (1900), p. 265. Tendencies in concentration.
Ibid., Vol. XXVI., (1906), p. 153. Courtenay DeKalb. General ideas on stamp-mill practice. Abstract from *Eng. Min. Jour.*
Ibid., Vol. XXVIII., (1907), p. 43. Fritz Cirkel. An article on the advances made in the art of concentration.
Comptes-Rendus, 1907, p. 154. M. Lenicque. Notes on the testing of ores.
Eng. Min. Jour., Vol. LXVI., (1898), p. 280. Costs and output at the Alaska-Treadwell mill for 1897-8. Abstract from yearly report.
Ibid., Vol. LXVIII., (1899), pp. 394, 762. A. J. Clark. Tests at the Homestake mill, 1897.
Ibid., Vol. LXXIX., (1905), p. 374. I. Roskelly. Stamp-mill construction, a valuable article. Abstract from *Chem. Met. Min. Soc. So. Africa.*
Ibid., p. 469. H. S. Denny. Discussion of graded analysis.
Ibid., Vol. LXXXI., (1906), p. 319. R. D. O. Johnson. An article on mill experiences, good ideas on general milling.
Ibid., Vol. LXXXII., (1906), p. 969. C. W. Goodale. Costs of concentrating at Butte, Montana.
Ibid., Vol. LXXXIII., (1907), p. 17. A. James. Gold milling in 1906. Many interesting details given.
Ibid., p. 467. J. H. Pitchford. Cost of milling in South Africa.
Ibid., p. 803. E. K. Judd. Use of ultra-violet rays from the arc light to detect by the eye willemite in jig tailings at Franklin, N. J.
Ibid., Vol. LXXXIV., (1907), p. 599. Article on water consumption.
Ibid., p. 689. Semi-annual report of the Broken Hill Proprietary Company.
Inst. Min. & Met., (Feb. 20, 1902). Philip Argall. Sampling and dry crushing in Colorado. Discussion of mill design.
Min. & Eng. Rev., (Sept. 2, 9, 16, 23, 1905). R. M. Aitken. Discussion of stamp milling in general. Details of stamp-mill construction and operation.
Min. Jour., Vol. LXXXI., (1907), p. 867. Comparison of the working costs in California and on the Rand.
Ibid., Vol. LXXXII., (1907), pp. 12, 81, 146, 295. Comparison of working costs in California and on the Rand.
Min. Mag., Vol. XIII., (1906), p. 480. B. Hodge. Result of a mill test in the Platteville, Wisconsin district.
Mines & Minerals, Vol. XIX., (1899), p. 481. H. Van F. Furman. Testing of gold ores.
Ibid., Vol. XXI., (1900), p. 112. Arthur Lakes. Description of Henry E. Woods testing plant.
Ibid., Vol. XXV., (1905), p. 448. Alfred Harvey. Notes and drawings of typical arrangement of samplers, crushing, and sizing machinery in a modern concentration mill.
Ibid., Vol. XXVI., (1905), p. 52. Walden Fawcett. Brief illustrated discussion of methods used at the Portland Fair, 1905, for testing of the black sands.
Ibid., Vol. XXVII., (1906), p. 135. Courtenay DeKalb. General ideas on stamp-mill practice.
Ibid., p. 375. Article on the flotation experiments made on British Columbia ores. Abstract from *Report of British Columbia Commission.*
Ibid., Vol. XXVIII., (1907), p. 49. Costs of milling in South Africa.
Ibid., p. 75. Comparison of working costs on the Rand and in California.
Min. Reporter, Vol. LI., (1905), p. 159. H. S. Stark. Successful treatment of Crown Reef tailings running only at $1.00 at 50 per cent. profit. No details of process given.
Ibid., Vol. LII., (1905), p. 254. Table giving number of stamps used and cost per ton of ore milled at various South Africa mills. Conclusions are that as number of stamps increases costs decrease.

Ibid., Vol. LIV., (1906), p. 11. Courtenay DeKalb. General ideas on stamp-mill practice. Abstract from *Can. Min. Inst.*
Min. & Sci. Press, Vol. LXXVIII., (1899), p. 261. A. C. McCallum. Design of mining machinery. Abstract from *Can. Min. Inst.*
Ibid., Vol. LXXIX., (1899), p. 148. Gold yield for New Zealand for April, 1899. Abstract from *Melbourne Mining Standard.*
Ibid., Vol. LXXX., (1900), p. 37. F. T. Snyder. Importance of mill constants for the engineer.
Ibid., pp. 36, 260. A. W. Warwick. History and development of the methods of concentrating ores.
Ibid., Vol. LXXXI., (1900), p. 37. F. T. Snyder. Factors in concentration.
Ibid., p. 93. McDermott. Hand concentration tests. Abstract from *Inst. Min. & Met.*
Ibid., Vol. LXXXIV., (1902), p. 230. Description of the Elmore oil concentration process, tried at the London testing plant. Results given.
Ibid., Vol. LXXV., (1902), p. 188. J. J. Deming. Valuable discussion of stamp-mill construction.
Ibid., Vol. XC., (1905), p. 105. F. C. Roberts. Article containing details and total costs of erecting 20-stamp mill with necessary equipment.
Ibid., p. 251. Ernest H. Simonds. Place and value of small ore tests.
Ibid., Vol. XCIII., (1906), pp. 138, 379, 534, 566. Algernon Del Mar. Some experiences in stamp milling.
Ibid., Vol. XCIV., (1907), p. 149. S. A. Worcester. Designing of milling plants.
Ibid., pp. 311, 337. Milling in South Africa. Costs, value of hand sorting, etc.
Ibid., p. 632. Mill construction on the Rand.
Ibid., Vol. XCV., (1907), p. 113. Comparison of costs on the Rand and in California.
Ibid., p. 272. Ore testing plant of the California Ore Testing Company, San Francisco, Cal.
Ibid., p. 320. W. E. Darrow. Testing of gold mill tailings.
Min. Soc., Nova Scotia, Vol. IV., (1898), p. 54. W. L. Libbey. Cost of milling in Nova Scotia.
Ibid., Vol. X., (1905-6), p. 125. F. H. Sexton. Ore dressing apparatus at the Dalhousie University, Halifax, Nova Scotia.
Min. World., Vol. XXIII., (1905), p. 339. List of ores which can be concentrated, also percentage that may be expected to be saved. Abstract from catalogue 7D of Colorado Iron Works, Denver, Col.
Ibid., Vol. XXVII., (1907), p. 25. Ore dressing apparatus at the Dalhousie University, Halifax, Nova Scotia.
New Zealand Min. Record, Vol. VIII., (1905), p. 409. J. Roskelly. Discussion of stamp mill construction.
Ibid., p. 523. Thomas Tonge. Description of several ore-testing plants in Denver, Colorado. Abstract from *Min. Jour.*
Oest. Zeit., Vol. LV., (1907), p. 197. Ulrich Horel. General article on progress in ore dressing.
Revue des Mines, Vol. XVI., (1906), p. 128. A. Bordeaux. Method of concentrating lead zinc ores. Costs, etc.
Revue de Metallurgie, Vol. IV., (1907), p. 596. General article on progress in ore dressing.
Ibid., p. 682. Use of ultra-violet rays from arc lights to detect by the eye, willemite in jig tailings at Franklin, N. J. Abstract from *Eng. & Min. Jour.*
So. African Assoc. Eng., (June 1, 1907). Ross E. Browne. Comparison of working costs in California and on the Rand.
So. African Min. Jour., Vol. VII., (1898), p. 857. J. R. Williams. Brief statement of cost and extraction of gold on the Rand.

Bibliography for Coal.

Ala. Ind. & Sci. Soc., Vol. VII., Part II., (1897), p. 47. W. B. Phillips. Description of coal washing in Alabama.
Am. Inst. Min. Eng., Vol. XIX., (1898), p. 293. W. S. Ayres. Detailed description of a new coal breaker.
Ibid., Vol. XXV., (1905), p. 31. Louis Stockett. Detailed methods and machines used in coal breaker at Stockett, Montana.
Ibid., Vol. XXXVI., (1906), p. 44. S. S. Wyer. Complete bibliography of coal washing covering literature from 1851 to 1905.
Ibid., Vol. XXXVI., (1905), p. 610. G. W. Harris. Description of anthracite washeries.
Ibid., Vol. XXXVII., (1906), p. 486. T. H. Aldridge. Detailed description of method for screening and washing coal.
Ibid., Vol. XXVII., (1898), p. 486. Charles C. Upham. Effect of crushing on the removal of sulphur from coal by washing.

Am. Mfr., Vol. LXII., (1898), p. 408. Wm. B. Phillips. Description of coal washing in Alabama.
Ibid., Vol. LXVII., (1900), p. 420. H. M. Cadell. Cheap coal mining in India.
Ibid., Vol. LXX., (1902), p. 267. Description of the Maurice centrifugal coal washer as used at St. Etienne, France. Results accomplished are given.
Ann. des Mines de Belgique., Vol. X., (1095), p. 968. M. J. Julin. Description of a breaker constructed by Humboldt Kalk. Am. Köhn for producing small coal.
Ibid., p. 968. Extract from report of M. J. Julin. Description of a coal-washing plant producing small coal.
Berg. u. Hütt. Jahrb., Vol. LV., (1907), p. 1. Friedrich O. Korn. Description of coal washing in the Saar District, Prussia.
Berg. u. Hütt. Rundschau, Vol. LIV., (1906), No. XIII. Description of improvements made in coal washing.
Can. Min. Inst., Vol. IX., (1906), p. 261. L. Stockett and B. R. Warden. Description of anthracite breaker operated by the Pacific Coal Company, Ltd., Bankhead, Alberta.
Can. Min. Jour., Vol. I., (1907), p. 141. An article treating of the principles of coal washing.
Can. Min. Rev., Vol. XIX., (1900), p. 248. S. A. Everett. An article on screening of coal.
Cassier's Mag., Vol. LXV., (1898), p. 60. H. L. Siordet. A short discussion of coal washing.
Coll. Guard., Vol. LXXVI., (1898), p. 465. Description of the mechanical preparation of coal at Saint-Eloy collieries.
Ibid., p. 648. Description of coal washing at Treharris, New South Wales. Abstract from *Preuss. Zeitschrift*, 1898, p. 133.
Ibid., Vol. LXXVII., (1899), p. 78. C. C. Upham. An article on the removal of sulphur from coal by washing. Abstract from *Am. Inst. Min. Eng.*, Vol. XXVIII., (1898), p. 486.
Ibid., p. 179. No author. Results of coal washing.
Ibid., p. 384. Graillot. Description of new coal-washing plant at Blanzy Colliery, Saône et Loire, France.
Ibid., p. 686. Description of screening plant at Witkowitz Colliery (Dombrau). Abstract from *Oest. Zeit.*, XLVII., (1899), p. 487.
Ibid., Vol. LXXIX., (1900), p. 547. No author. Description of coal-washing plant at Cadeby Colliery.
Ibid., Vol. LXXX., (1900), p. 1254. No author. Description of the screening and picking plant for coal at the Roche-la-Molière and Firming collieries.
Ibid., Vol. LXXXI., (1901), p. 33. No author. Description of a coal briquetting system.
Ibid., Vol. LXXXII., (1901), p. 359. Description of a new coal-screening and washing plant at a Belgian colliery.
Ibid., p. 630. Description of the by-pass system of screening coal.
Ibid., Vol. LXXXIV., (1902), p. 1117. Results obtained at the Baum washer at Gelsenkirchen.
Ibid., p. 1119. Results of coal washing at Bruay and Marles, France.
Ibid., Vol. LXXXVI., (1903), p. 715. G. W. Harris. Descriptions of an American coal washery. Abstract from *Mines and Minerals*, Vol. XXIII., (1903), p. 481.
Ibid., Vol. LXXXIX., (1905), p. 608. Description of a method of separating dust from coal by means of a blast and suction produced by fans.
Ibid., p. 1042. E. Ramsay and Charles E. Bowron. An article on coal washing in Alabama. Abstract from *Mines and Minerals*, Vol. XXV., (1904), p. 227.
Ibid., Vol. XCII., (1906), p. 1027. Description of a method of removal of coal dust from small coal before reaching the washing plant. Abstract from *Zeit. Berg. Hütt. u. Salinenwesen.*
Comptes-Rendus, (1898), p. 204. M. Bernotte. Description of a coal washer at the St. Beram.
Eng. Mag., Vol. XXVIII., (1905), p. 553. R. V. Norris. Description of coal breakers, shaking screens, jigs, and spiral and chute pickers for the preparation of coal.
Eng. & Min. Jour., Vol. LXV., (1898), p. 702. B. T. Bertelot. Brief description of methods used in washing old culm banks.
Ibid., Vol. LXVII., (1899), p. 440. A. D. W. Smith. Description of a washer at Reynolds culm bank.
Ibid., Vol. LXXX., (1905), p. 584. Description of the Truesdale breaker and washery.
Ibid., p. 584. Description of the Truesdale breaker and washery of the Delaware, Lackawanna and Western R. R., in Lackawanna Valley, Pennsylvania.
Ibid., Vol. LXXXI., (1905), p. 798. G. W. Harris. Description of anthracite washeries. Abstract from *Am. Inst. Min. Eng.*
Ibid., Vol. LXXXII., (1906), p. 399. R. M. Hosea. Description of anthracite washing in Colorado.
Ibid., Vol. LXXXIII., (1907), p. 857. L. Stockett and B. R. Warden. Description of the anthracite breaker of the Pacific Coal Company, Ltd., at Bankhead, Alberta.

Ibid., Vol. LXXXIV., (1907), p. 16. F. W. Parsons. Description of the Midland Coal washery, Philippe, West Virginia.
Ibid., p. 216. M. S. Hachita. Description of anthracite breaker at Alden, Pennsylvania.
Freiberger Jahrb., (1907), p. 27A. Alfred Wiede. Description of a method for separating coal dust from fine coal.
Ibid., p. 159B. Description of coal picking and removal of fine dust at Könige-Marien-Hütte in Cainsdorf.
Genie Civil, Vol. LXIII., (1903), p. 112. Description of the Luhrig and Coppée coal-washing plant.
Glückauf, Vol. XLI. Description of method used for breaking coal in an anthracite mine in Pennsylvania.
Ibid., p. 842. Illustrated description of the surface installation and washery of the Bethune Mining Company in the Pas de Calais department, France.
Industrial World, Vol. XLI., (1907), p. 854. W. G. Wilkins. Description of a bituminous coal washery, Indiana County, Pennsylvania.
Inst. Min. Eng., Vol. XXIII., (1902), p. 179. Wm. Scott. Description of the Craig coal washery, originally designed for breaking gold-bearing sands. Good results on washing coal 1¼ inches in size.
Ibid., Vol. XXXIII., (1907), p. 138. E. Greaves. Description of the Elliott coal washer and Hardy dust extractor.
Iron Age, Vol. LXXVI., (1905), p. 1234. Description and drawings of Pittsburg coal washer.
Ibid., Vol. LXXX., (1907), p. 96. S. Diescher, Sr. An article on coal washing.
Iron and Coal Trades Rev., (Aug. 4, 1905). Brief description of new coal-screening plant at Clifton colliery.
Ibid., Dec. 14, 1906. Description of the Baum coal-washing plant of the Barnsley main colliery, Barnsley, Yorkshire, England.
Ibid., Vol. LVIII., p. 467. Description of coal-washing plant at Coahiula Coal Company.
Iron and Steel Inst., Vol. LV., (1899), p. 365. Description of the coal-washing plant of the Coahiula Coal Company. Abstract from *Iron and Coal Trades Rev.*
Ibid., (1906), p. 611. An article on improvements in coal washing. Abstract from *Berg. u. Hütt. Zeit.*
Ibid., Vol. LXXIII., (1907), p. 446. Some references to coal washing.
Ibid., Vol. LXXV., (1907), p. 392. Some references on coal washing.
Metallurgie, Vol. III., (1906), p. 630. Description of the Baum coal-washing plant at the Anna mine in Westphalia.
Mines and Minerals, Vol. XIX., (1898), p. 7. R. M. Hosea. Complete description of practice at the Ruby Coal Breaker, Gunnison County, Colorado.
Ibid., p. 294. Chas. Piez. Description of coal-handling machinery.
Ibid., p. 341. Description of the Cranberry coal breaker.
Ibid., Vol. XX., (1900), p. 246. G. H. Ashley. Description of coal washing in Indiana.
Ibid., Vol. XXII., (1901), p. 55. D. F. Cameron. Description of a coal-washing plant.
Ibid., Vol. XXIII., (1903), p. 481. G. W. Harris. Description of the Bellevue washery of the Delaware, Lackawanna, and Western R. R. Company, Scranton, Pennsylvania.
Ibid., Vol. XXIV., (1903), p. 212. D. T. Blakey. Illustrated description of the Stewart system of coal washing.
Ibid., p. 228. J. V. Schaefer. Description of coal washing at the Aldridge plant of the Montana Coal and Coke Company.
Ibid., Vol. XXV., (1905), p. 280. Description of the new Hammond breaker, built by the Philadelphia and Reading Coal and Iron Company. Illustrated.
Ibid., p. 382. Discussion of changes in anthracite coal-dressing practice. Comparison made between the Hammond breaker of 1902 and its predecessor of 1878.
Ibid., p. 417. W. R. Crane. Description of iron ore washing at the mill of the Tennessee Coal, Iron and Railroad Company, East Giles, Alabama.
Ibid., pp. 451, 538, 577. L. A. Harding and G. R. Delamater. Description of methods used in preliminary investigation of coal washing. Description of different machines used in coal washing.
Ibid., Vol. XXVI., (1906), p. 241. Description of the Pine Hill coal breaker near Minesville, Pennsylvania.
Ibid., Vol. XXVII., (1907), p. 317. Description of the Baum coal-washing plant of the Barnsley Main Colliery, Barnsley, Yorkshire, England.
Ibid., Vol. XXVIII., (1907), pp. 7, 62. G. R. Delamater. An article on bituminous coal washing.
Min. Reporter, Vol. LVI., (1907), p. 312. Description of bituminous coal washing in southern Colorado.
Min. World, Vol. XXIII., (1905), p. 435. L. Gluck. Description of the Spring Valley coal-dressing plant.

Ind., Vol. XXVI., 1907, p. 537. T. H. Aldrich. Description of screening and washing of coal. Abstract from *Am. Inst. Min. Eng.*, Vol. XXXVII.

Oest. Zeit., Vol. XLVII., 1899, p. 487. H. Fillunger. Description of the screening plant at the Witkowitz colliery. Dombrau.

Ibid., Vol. LV., 1907, p. 455. Martin Baldauf. Description of coal washing in England.

Page's Weekly, Jan. 27, 1905. Illustrated description of a newly erected plant which automatically handles and screens 3000 tons of coal per day.

Preuss. Zeit., 1898, p. 1[illegible]. Detailed description of coal cleaning at Treharris, New South Wales.

Revue des Mines, Vol. X., 1905, p. 250. Emile Discry. General account of coal washeries in Belgium with description of different machines used.

Ibid., p. 274. R. A. Henry. Theoretical and experimental side of ore dressing. Description of different styles of jigs used in coal dressing.

Ibid., Vol. XIX., Ser. IV., 1907, p. 270. Eugene Post. Description of the magnetic treatment of coal. Not a commercial process.

Stahl u. Eisen, Vol. XX., 1900, pp. 513, 597, 653, 698, 750, 798. Description of mechanical handling of ores and coal.

Ind. Min., Vol. II., 1903, Part II., p. 335. Pierre Charvet. Discussion of the control of coal washing machines by a study of graphic curves based on laboratory experiments.

U. S. Geol. Survey. Professional paper No. 48, Part III., (1907), p. 1460. J. D. Wick. Description of the coal-washing plant at the St. Louis Exposition.

Zeit. Berg-Hütt- u. Salinen-wesen, Vol. LIII., 1905, p. 127. Illustrated description of a machine to wash small coal: combination of belt elevator feeding a screw feed which in turn feeds a wash-water trommel.

Ibid., Vol. LIV., 1906, pp. 279, 285. Description of method of removing dust from small coal before it reaches the washing plant.

Ibid., Vol. LV., 1907, p. 133. Description of method used at the Dudweiler breaker for removal of dust from coal.